0J2849

WIRING—DIAGRAM

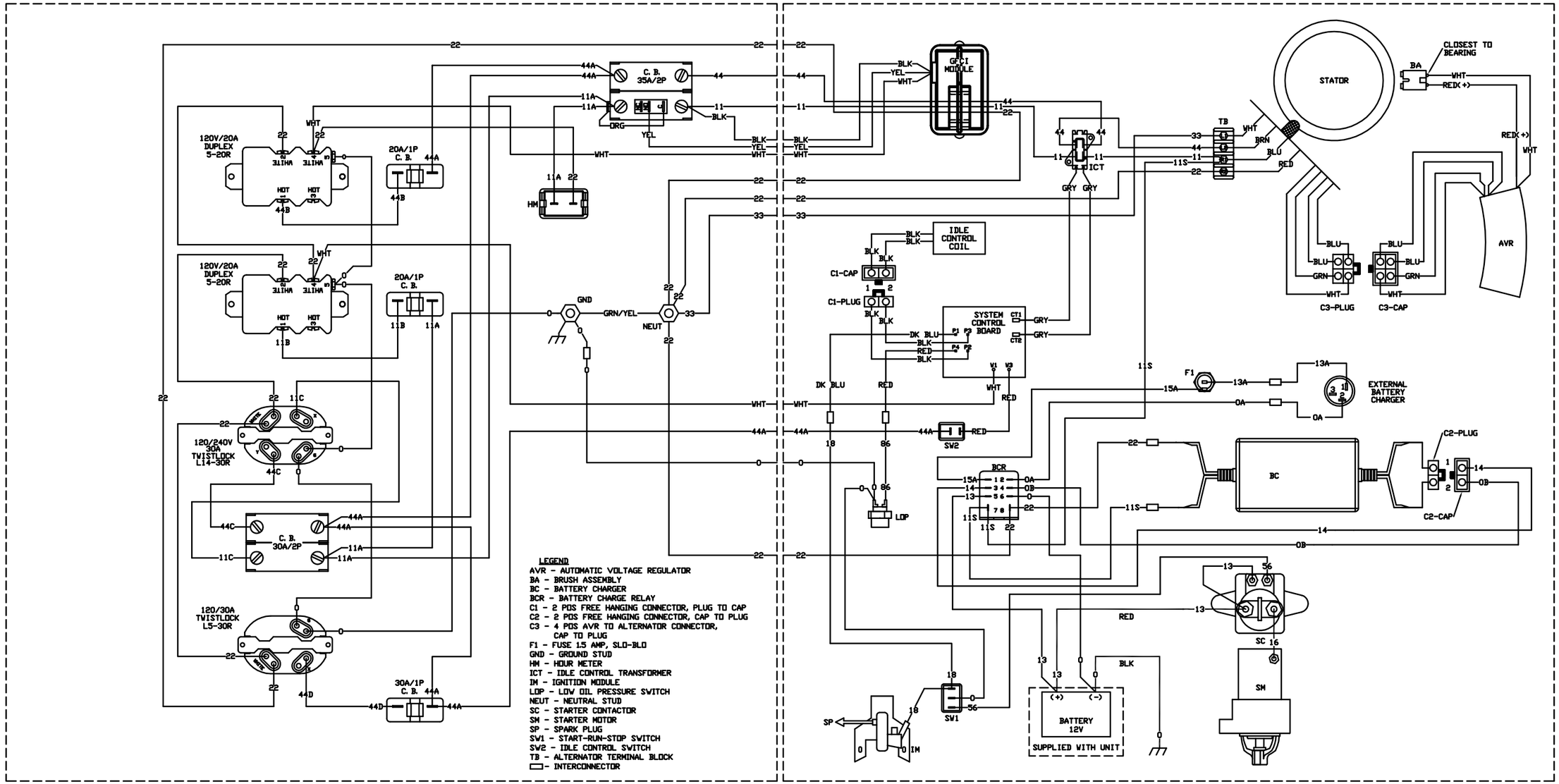

SHEET 1 OF 2

GENERAC POWER SYSTEMS OWNS THE COPYRIGHT OF THIS DRAWING WHICH IS SUPPLIED IN CONFIDENCE AND MUST NOT BE USED FOR ANY PURPOSE OTHER THAN FOR WHICH IT IS SUPPLIED WITHOUT THE EXPRESS WRITTEN CONSENT OF GENERAC POWER SYSTEMS.

© GENERAC POWER SYSTEMS 2001

11/5/10	-A-	RELEASED

EST. WT.

FINAL WT.

DO NOT SCALE

ALL DIMENSIONS AND TOLERANCING PER ASME Y14.5M-1994

UNLESS OTHERWISE SPECIFIED :

ALL XX DIM ---- ±0.4 MM
ALL XX.X DIM --- ±0.4 MM
ALL XX.XX DIM -- ±0.15 MM
ALL ANGLES ---- ±1°

DRAWING TITLE
WIRING DIAGRAM/SCHEMATIC, XP8.0 PORT, GFCI

MATERIAL
N/A

DWN	DATE	MFG	DATE
CTF	10/25/10		
CHKD KC	DATE 11/5/10	APPD KB	DATE 11/5/10
RELEASED FOR PRODUCTION	BY KBAUER		DATE 11/5/10

GENERAC POWER SYSTEMS
Whitewater
P.O. BOX 8
WAUKESHA, WIS. 53187

FILE NAME 0J2849-A.DWG
SIZE B
SCALE 1 = 1
FIRST USE 5931-1
DWG NO. 0J2849
REV A

0J2849

SCHEMATIC—DIAGRAM

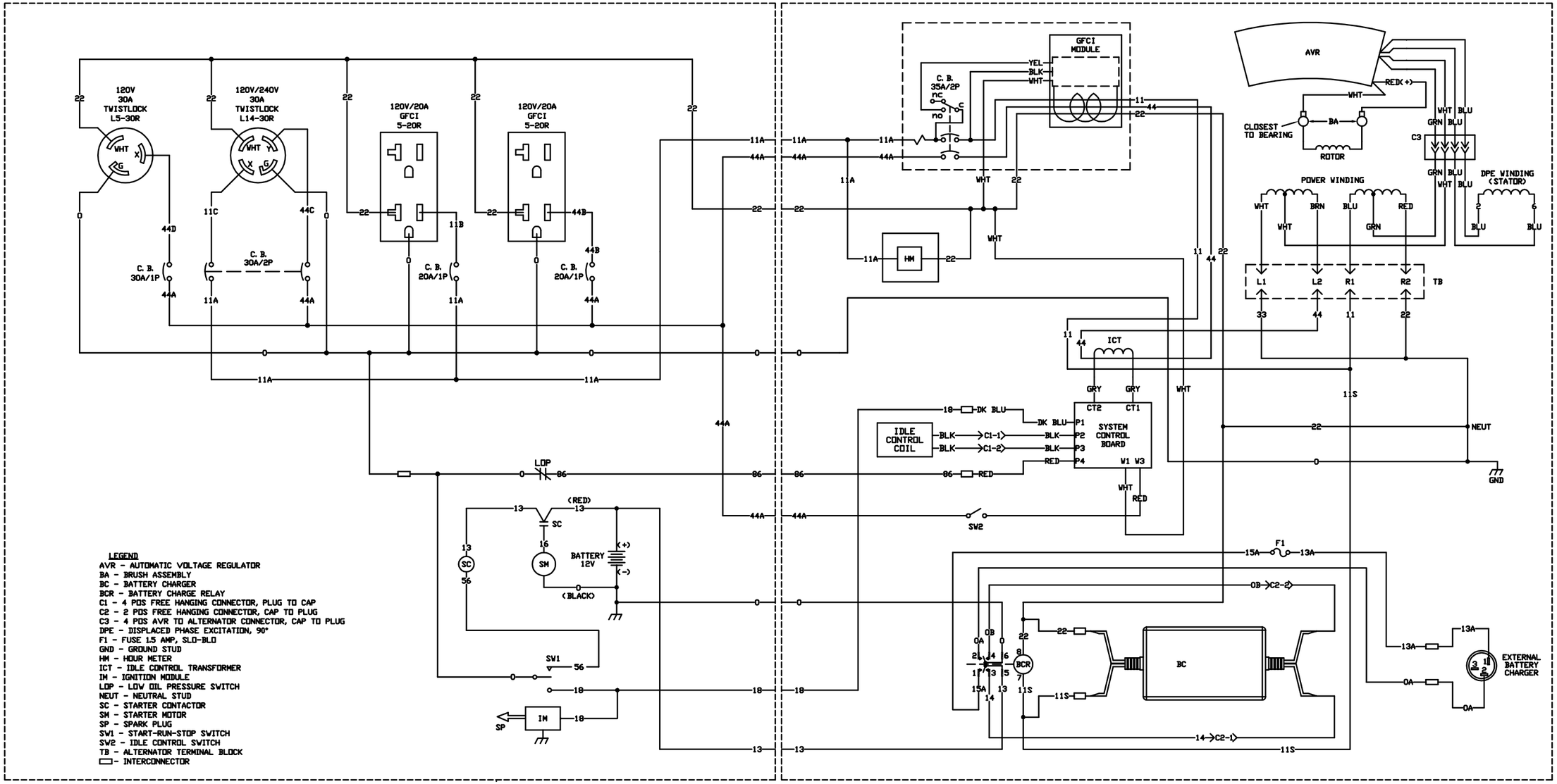

SHEET 2 OF 2

GENERAC POWER SYSTEMS OWNS THE COPYRIGHT OF THIS DRAWING WHICH IS SUPPLIED IN CONFIDENCE AND MUST NOT BE USED FOR ANY PURPOSE OTHER THAN FOR WHICH IT IS SUPPLIED WITHOUT THE EXPRESS WRITTEN CONSENT OF GENERAC POWER SYSTEMS.

© GENERAC POWER SYSTEMS 2001

11/5/10	-A-	RELEASED			

EST. WT.

FINAL WT.

DO NOT SCALE

ALL DIMENSIONS AND TOLERANCING PER ASME Y14.5M-1994

UNLESS OTHERWISE SPECIFIED :

ALL XX DIM ---- ±0.4 MM
ALL XX.X DIM --- ±0.4 MM
ALL XX.XX DIM -- ±0.15 MM
ALL ANGLES ---- ±1°

DRAWING TITLE

WIRING DIAGRAM/SCHEMATIC, XP8.0 PORT, GFCI

MATERIAL

N/A

DWN	CTF	DATE	10/25/10	MFG		DATE	
CHKD	KC	DATE	11/5/10	APPD	KB	DATE	11/5/10
RELEASED FOR PRODUCTION		BY	KBAUER			DATE	11/5/10

GENERAC POWER SYSTEMS
Whitewater
P.O. BOX 8
WAUKESHA, WIS. 53187

FILE NAME	0J2849-A.DWG	SIZE	B
SCALE	1 = 1	FIRST USE	5931-1
DWG NO.	0J2849	REV	A