SH	REV	WINDCHILL VERSION
1/1	C	C.2

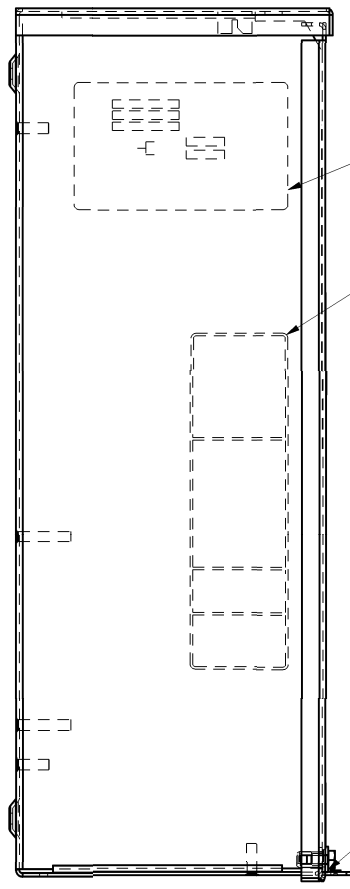

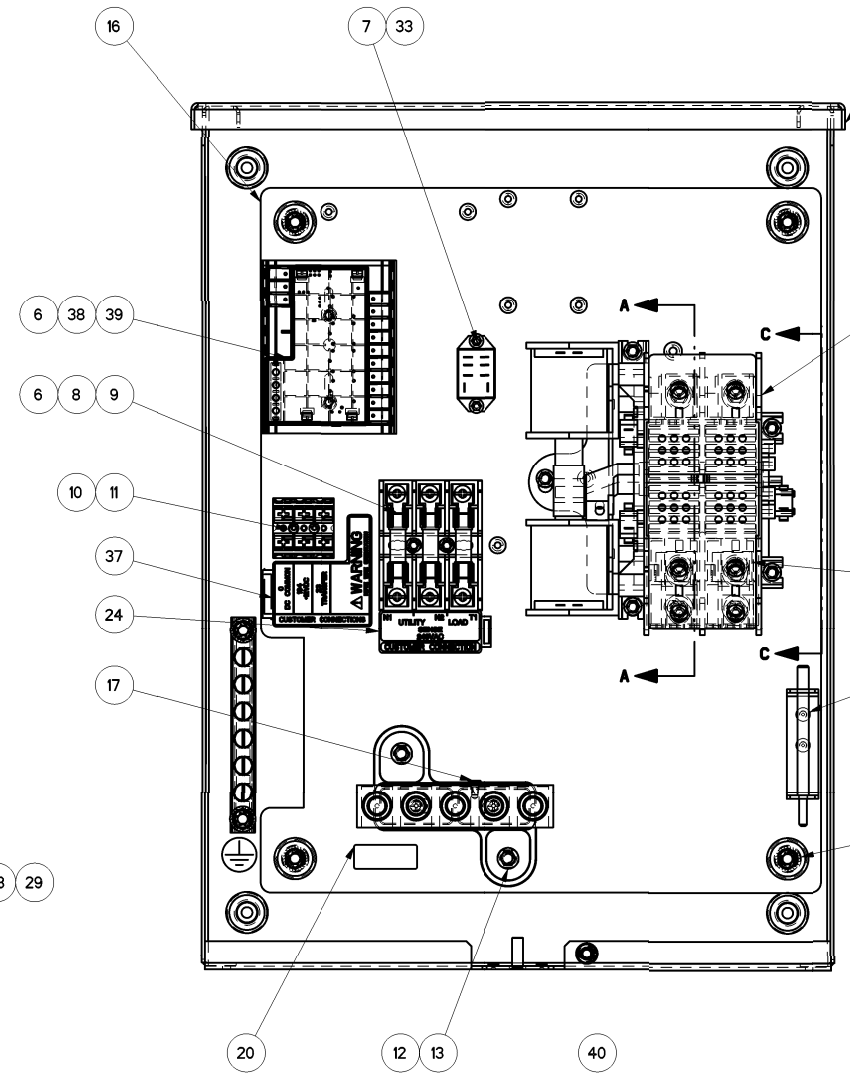

ITEM #27 ONE MOUNTED UNDER ONE MOUNTED OF TOP OF SUBPLATE ITEM #16
4 PLACES

CENTER DECAL APPROXIMATELY 6-1/4" DOWN FROM TOP OF COVER USING ASSEMBLY TEMPLATE

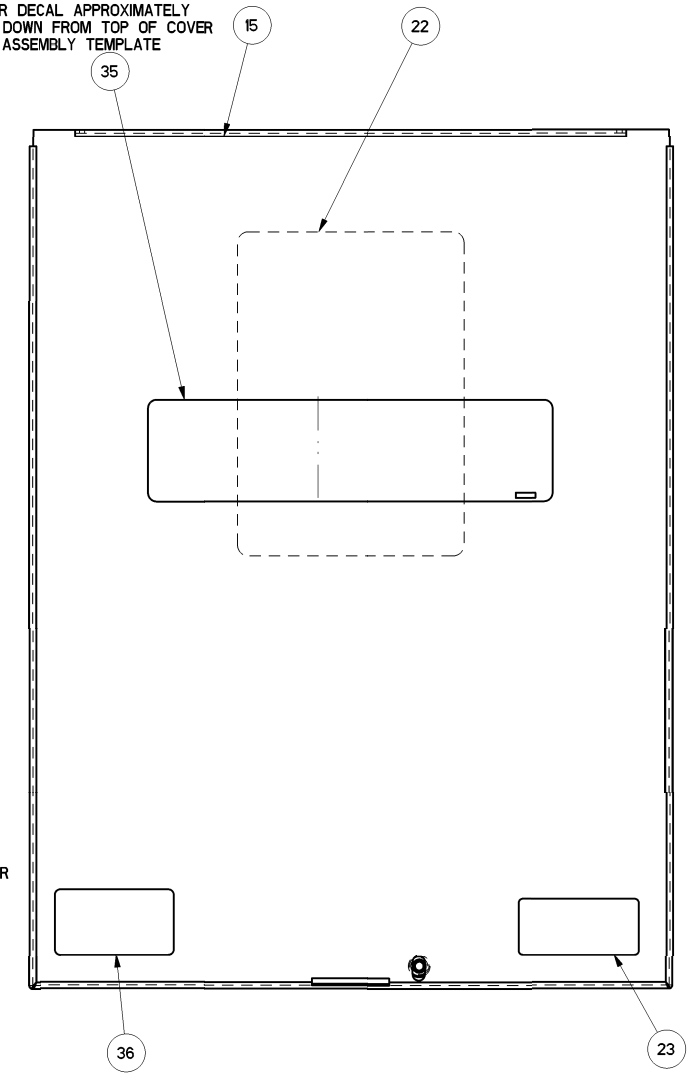

ITEM #	PART #	QTY	DESCRIPTION
1	0L2911	1	XFRSW HSB 200A 2P 250V
2	074908	5	SCREW HHTT M5-0.8 X 10 BP
3	0E3375	6	LUG SLDLSS 250-#6 AL/CU
4	0F1252	6	SCREW BHSC 1/4-20 X 3/8
5	022097	6	WASHER LOCK M6-1/4
6	0A1495	4	SCREW HHTT M4-0.7 X 10 BP
** 7	0K0103	1	RELAY PNL 12VDC DPDT 10A@240VA
** 8	0D2572	1	FUSEBLOCK 30A 600V 3POS W/SQ
9	073590A	3	FUSE 5A X BUSS
** 10	0D7393T	1	TERM BLOCK 3P UL 12-20AWG
11	0L3068	2	SCREW THTT M3-0.5 X 25 ZP
12	0K0108A	1	ASSY-NEUT BLK 200A W/TAP
13	090388	2	SCREW HHTT M6-1.0 X 12 ZINC
14	0K01120ALOR	1	ENCLOSURE 100/200A XFER SW_RAW
15	0K01130ALOR	1	COVER 100A XFER SWITCH_INST_RAW
16	0K0114	1	SUBPLATE,100/200A XFER SW
17	026902	1	SCREW HHTT #8-32 X 1/4 CZ
* 18	0K1799B	1	DECAL DATA NON SE SW 200A
19	0A9517	1	DECAL MANUAL 5A FUSE
20	0A9457	1	DECAL, NEUTRAL
21	0E6033	2	90 DEGREE DN SPADE CONNECTOR
22	0K1800	1	DECAL TEST SEQUENCE 100/200A NON
23	0G3274	1	DECAL LIVE CIRCUIT ENG/FRN/SPN
24	0H6389	1	DECAL UTILITY LOAD SENSE 240V
25	0J8202	1	LUG SLDLSS 2/0-#14X#10-32X.125
26	026850	2	WASHER LOCK EXT 1/4 STL
27	022473	4	WASHER FLAT 1/4-M6 ZINC
28	0A2115	1	WASHER NYLON .257
29	085296	1	SCREW HHC 1/4-20 X 1/2 SS
30	0D6162	2	RIVET POP .156 X .362 AL
31	0E6155	1	PIN ARM EXTENDER
32	0E6193	1	BRACKET, ARM EXTENDER
33	0F2659	2	SCREW HHTT M3-0.5 X 6 BP
34	0G8411	6	NUT HEX FL WHIZ 1/4-20
* 35	0K1098	1	DECAL RTS TRANSFER SW GENERAC
36	0H7274	1	DECAL NEC COMPLIANCE
37	0H7917	1	DECAL CUSTOMER CONN RTS
38	0H7270	1	CHANNEL SNAPTRACK 76.2 X 101.2
39	0L3123	1	ASSY SMART AC MOD
40	0L6699	1	NUT TRIC 1/4-20 ALUM
41	0L3246	1	WIRE HARNESS 100/200A RTS

*-SERIAL NUMBER AND FRONT DECAL PER MODEL
**-SUPPLIED WITH HARNESS ITEM #41

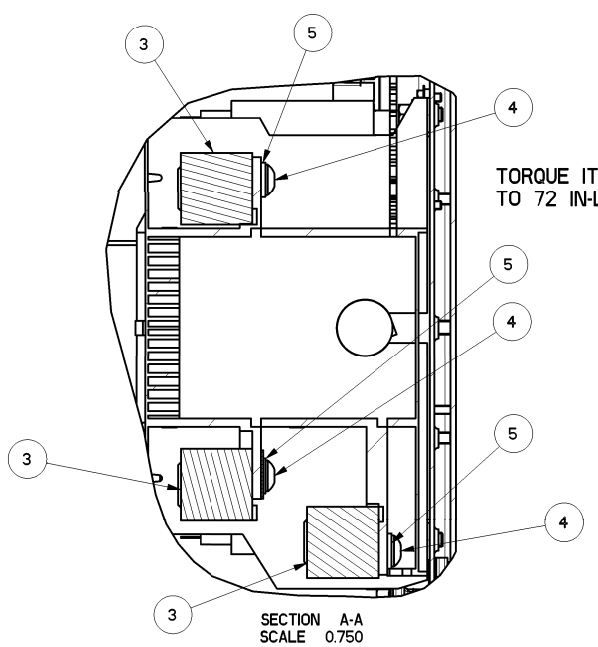

TORQUE ITEM #4
TO 72 IN-LBS

SECTION A-A
SCALE 0.750

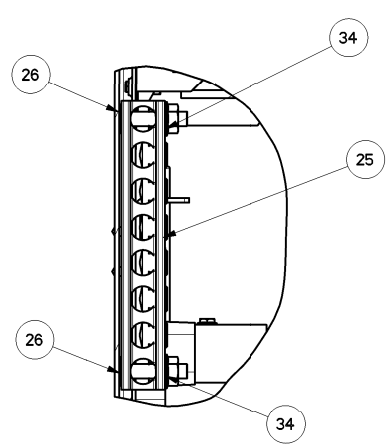

SECTION B-B
SCALE 0.600

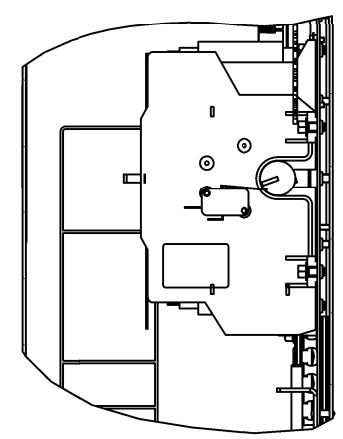

SECTION C-C

PART NUMBER	DESCRIPTION	ITEM # 18	ITEM # 35
0L3211	ASSEMBLY 200A 120/240 NON SE	0K1799B	PER MODEL
0L3211A	EXPLODED VIEW DRAWING	N/A	N/A
0L3211B	ASSEMBLY 200A 120/240 NON SE	0K1799B	0K1098
0L3211C	ASSEMBLY 200A 120/240 NON SE	0J3806B	0K1274

REFERENCE DRAWINGS

0L3241	SCHEMATIC/WIRING DIAGRAMS
0F6778	CARTON 30'5 X 14'2 X 7'8
0H7275	TEST PROC HSB XFRSW
0K0115	KIT ENCL 100/200A NON SE AL

DRAWING CREATED FROM PRO/ENGINEER 3D FILE. ECO MODIFICATION TO BE APPLIED TO SOLID MODEL ONLY.

GENERAL TOLERANCES UNLESS NOTED
ALL XX : ± 0.4 MM
XXX : ± 0.4 MM
XXXX : ± 0.15 MM
ALL ANG : ± 1°
INTERPRET DIM AND TOL PER ASME Y14.5M-1994
THIRD ANGLE PROJECTION

GENERAC POWER SYSTEMS DWG THE COPYRIGHT OF THIS DRAWING WHICH IS SUPPLIED IN CONFIDENCE AND MUST NOT BE USED FOR ANY PURPOSE OTHER THAN FOR WHICH IT IS SUPPLIED WITHOUT THE EXPRESS WRITTEN CONSENT OF GENERAC POWER SYSTEMS. © GENERAC POWER SYSTEMS 2010

ELECTRONICALLY APPROVED INSIDE WINDCHILL

GENERAC

TITLE
ASSEMBLY DWG 2-POLE 200A 120/240V

ISSUE DATE:

SIZE	CAGE NO	DWG NO	REV
D	N/A	0L3211$	C
SCALE 0.450	WT-KG 22428213.13	SHEET 1 of 1	

GENERAL ASSEMBLY DRAWING