Installation Guidelines

Spark-Ignited Stationary Generators

Protector Series 22 kW to 60 kW

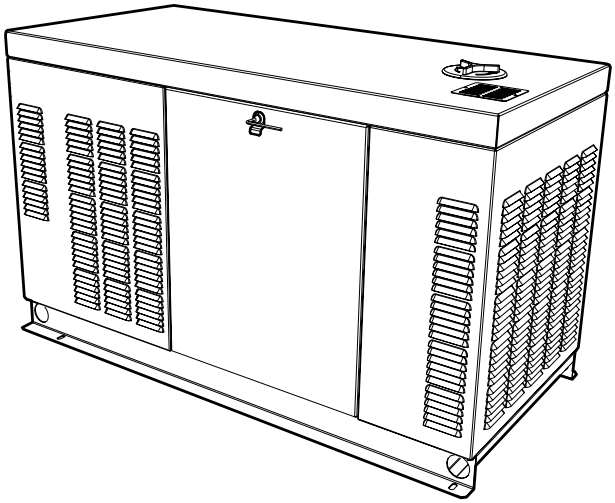

WARNING

Loss of life. This product is not intended to be used in a critical life support application. Failure to adhere to this warning could result in death or serious injury. (000209b)

Register your Generac product at:
WWW.GENERAC.COM
1-888-GENERAC
(888-436-3722)

Para español , visita: http://www.generac.com/service-support/product-support-lookup
Pour le français, visiter : http://www.generac.com/service-support/product-support-lookup

SAVE THIS MANUAL FOR FUTURE REFERENCE

Use this page to record important information about this generator.

Model:	
Serial:	
Prod Date Week:	
Volts:	
LPV Amps:	
NG Amps:	
Hz:	
Phase:	
Controller P/N:	

Record the information found on the unit data label on this page. For location of the unit data label, see owner's manual. The unit has a label plate affixed to the inside partition, to the left of the control panel console.

Always supply the complete model and serial numbers of the unit when contacting an Independent Authorized Service Dealer (IASD) about parts and service.

Operation and Maintenance: Correct maintenance and care of the unit ensures a minimum number of problems, and keeps operating expenses at a minimum. It is the operator's responsibility to perform all safety inspections, to verify all maintenance for safe operation is performed promptly, and to have the equipment inspected periodically by an IASD. Normal maintenance, service, and replacement of parts are the responsibility of the owner/operator and are not considered defects in materials or workmanship within the terms of the warranty. Individual operating habits and usage may contribute to the need for additional maintenance or service.

When the generator requires servicing or repairs, Generac recommends contacting an IASD for assistance. Authorized service technicians are factory-trained and are capable of handling all service needs. To locate the nearest IASD, please visit the dealer locator at: ***www.generac.com/Dealer-Locator***.

⚠WARNING

CANCER AND REPRODUCTIVE HARM
www.P65Warnings.ca.gov.

(000393a)

Table of Contents

Section 1: Safety Rules & General Information

Introduction **1**
- Read This Manual Thoroughly 1

Safety Rules **1**
- How to Obtain Service 1

General Hazards **2**

Exhaust Hazards **3**

Electrical Hazards **3**

Fire Hazards **3**

Explosion Hazards **4**

Lifting Hazards **4**

Battery Hazards **4**

General Rules **5**
- Before You Begin 5

Standards Index **6**

Section 2: Installation Planning

Introduction **7**

Unit Drawings **7**
- Installation Drawings 7
- Wiring Diagrams 7

Receiving **7**
- Receiving and Unpacking 7
- Inspection 7

Storage Before Installation **7**
- Long Term Storage 7
- Short Term Storage 7

Lifting **7**

Generator Location **8**
- General Location Guidelines 8
- Weather Considerations 8

Section 3: Site Selection and Preparation

Site Selection **9**

Carbon Monoxide **9**
- Carbon Monoxide Detectors 9
- Potential CO Entry Points 10
- Protect the Structure 10

Fire Prevention **11**
- Distance Requirements 11
- Fire Codes, Standards, and Guidelines 12
- Generator Maintenance 12

Fresh Air for Ventilation and Cooling **13**

Water Ingress Avoidance **13**

Proximity to Utilities **13**

Transportation Recommendations **13**

Site Preparation **13**
- Generator Foundation 13
- Concrete Pad 13
- Dimensions 13
- Stub-Up Area 14

Mounting **14**
- Fixed Foundation 14
- Connections 14

Placement on Roofs, Platforms, and Other Supporting Structures **14**

Section 4: Gaseous Fuel Systems

Fuel Requirements and Recommendations **15**
- BTU Content 15
- Fuel Pressure 15

Fuel System Conversion **15**

Gaseous Fuel Properties **15**
- Natural Gas 15
- Liquid Propane Gas 16

Definitions **16**

Gaseous Fuel Systems **17**
- NG System 17
- Flexible Fuel Line 17
- Primary Regulator Outlet 17
- LP Gas System 19
- Sediment Trap 19

Fuel Pressure Regulators **20**
- General 20
- Best Practices 20
- Operating Fuel Pressure 20
- Engine Fuel Consumption 20
- Fuel Pressure Regulator Sizing 21
- Recommended Fuel Pressure Regulators 21
- Primary Fuel Pressure Regulator 21

Pipe Sizing Considerations **22**
- General 22

Sizing LP Tanks for LP Gas Withdrawal **23**

Final Operating Test **26**
- Fuel Shutoff Valve 26
- Fuel Pressure Test Port Location 26
- Final Test Procedure 27

Section 5: Electrical System

General Information 29
Connecting Generator Feeder Conductors 29
Connecting Control Circuit Wires 30
Removing Rear Panel and Stub-Up Cover 30
Typical Load Leads and Control Wiring in Stub-Up 30
Customer Load Wiring 30
Control Wiring Connections 31
RTS Series Transfer Switch With T1 Fuse/Connection 31
Two-Wire Start 32
Optional Accessory Power 33
Installing Stub-Up Cover and Rear Panel 33
Transfer Switch Location 33
Battery 33
General Safety Precautions 33
Battery Requirements 34
Battery Installation 34

Section 6: Control Panel Startup / Testing

Control Panel Interface 35
Using the AUTO/MANUAL/OFF Buttons 35
Generator Setup 35
Activate Unit 36
Setting The Exercise Timer 37
Before Initial Startup 37
Install Wizard 37
Interconnect System Self Test Feature 37
Before starting, complete the following: 37
Checking Manual Transfer Switch Operation 39
Operational Checks 39
Electrical Checks 39
Testing Generator Under Load 39
Testing Auxiliary Shutdown Switch Operation 40
Checking Automatic Operation 40
Installation Summary 41
Shutting Generator Down While Under Load or During a Utility Outage 41

Section 7: Installation Checklists

Safety Checklist 43
Installation Planning Checklist 43
Foundations and Mounting Checklist 43
Ventilation System Checklist 44
Exhaust System Checklist 44
Gaseous Fuel System Checklist 44
Electrical System Checklist 45
Oil Maintainer System Checklist 45

Section 8: Lube Oil Maintainer System

Lube Oil Maintainer System 47
Description 47
Fill Oil Supply Tank 47
Test Functionality 47
Oil Shutoff Valve 48

Section 9: Troubleshooting/Quick Reference Guide

Troubleshooting 49
Quick Reference Guide 50

Section 10: Accessories

Section 11: Installation Drawings

0K8420-D 25/30 kW (1.5 L) Page 1 of 2 55
0K8420-D 25/30 kW (1.5 L) Page 2 of 2 56
0K8624-D 22/27 kW (2.4 L) Page 1 of 2 57
0K8624-D 22/27 kW (2.4 L) Page 2 of 2 58
0K8636-C 36/45 kW (2.4 L) Page 1 of 2 59
0K8636-C 36/45 kW (2.4 L) Page 2 of 2 60
0K9268-E 32/38 kW (2.4 L) Page 1 of 2 61
0K9268-E 32/38 kW (2.4 L) Page 2 of 2 62
0L2090-C 60 kW (2.4 L) Page 1 of 2 63
0L2090-C 60 kW (2.4 L) Page 2 of 2 64
0K9243-C 48 kW (5.4 L) Page 1 of 2 65
0K9243-C 48 kW (5.4 L) Page 2 of 2 66
Alternator AC Lead Connections 67
Four-Lead, Single-Phase Stator 67
Alternator Power Winding Connections 67
Three-Phase Alternators (“Y” Configuration) 67
Three-Phase Alternators (“Delta” Configuration) 68
Alternator Wiring Diagram 69

Section 1: Safety Rules & General Information

Introduction

Thank you for purchasing this compact, high performance, liquid-cooled, engine-driven generator. It is designed to automatically supply electrical power to operate critical loads during a utility power failure.

This unit is factory installed in an all-weather enclosure intended exclusively for outdoor installation. This generator will operate using either vapor withdrawn liquid propane (LP gas) or natural gas (NG).

NOTE: This generator is suitable for supplying typical residential and commercial loads such as induction motors (sump pumps, refrigerators, air conditioners, furnaces, etc.), electronic components (computer, monitor, TV, etc.), lighting loads, and microwaves, when sized correctly.

The information in this manual is accurate based on products produced at the time of publication. The manufacturer reserves the right to make technical updates, corrections, and product revisions at any time without notice.

Read This Manual Thoroughly

WARNING

Consult Manual. Read and understand manual completely before using product. Failure to completely understand manual and product could result in death or serious injury. (000100a)

If any section of this manual is not understood, contact the nearest Independent Authorized Service Dealer (IASD) or Generac Customer Service at 1-888-436-3722 (1-888-GENERAC), or visit ***www.generac.com*** for starting, operating, and servicing procedures. The owner is responsible for proper maintenance and safe use of the unit.

SAVE THESE INSTRUCTIONS for future reference. This manual contains important instructions that must be followed during placement, operation, and maintenance of the unit and its components. Always supply this manual to any individual that will use this unit, and instruct them on how to correctly start, operate, and stop the unit in case of emergency.

Safety Rules

The manufacturer cannot anticipate every possible circumstance that might involve a hazard. The alerts in this manual, and on tags and decals affixed to the unit, are not all inclusive. If using a procedure, work method, or operating technique that the manufacturer does not specifically recommend, verify that it is safe for others and does not render the equipment unsafe.

Throughout this publication, and on tags and decals affixed to the unit, DANGER, WARNING, CAUTION, and NOTE blocks are used to alert personnel to special instructions about a particular operation that may be hazardous if performed incorrectly or carelessly. Observe them carefully. Alert definitions are as follows:

DANGER

Indicates a hazardous situation which, if not avoided, will result in death or serious injury.

(000001)

WARNING

Indicates a hazardous situation which, if not avoided, could result in death or serious injury.

(000002)

CAUTION

Indicates a hazardous situation which, if not avoided, could result in minor or moderate injury.

(000003)

NOTE: Notes contain additional information important to a procedure and will be found within the regular text of this manual.

These safety alerts cannot eliminate the hazards that they indicate. Common sense and strict compliance with the special instructions while performing the action or service are essential to preventing accidents.

How to Obtain Service

When the unit requires servicing or repairs, contact Generac Customer Service at 1-888-GENERAC (1-888-436-3722) or visit ***www.generac.com*** for assistance.

When contacting Generac Customer Service about parts and service, always supply the complete model and serial number of the unit as given on its data decal located on the unit. Record the model and serial numbers in the spaces provided on the front cover of this manual.

General Hazards

DANGER

Loss of life. Property damage. Installation must always comply with applicable codes, standards, laws and regulations. Failure to do so will result in death or serious injury. (000190)

DANGER

Automatic start-up. Disconnect utility power and render unit inoperable before working on unit. Failure to do so will result in death or serious injury. (000191)

WARNING

Loss of life. This product is not intended to be used in a critical life support application. Failure to adhere to this warning could result in death or serious injury. (000209b)

WARNING

Equipment damage. This unit is not intended for use as a prime power source. It is intended for use as an intermediate power supply in the event of temporary power outage only. Doing so could result in death, serious injury, and equipment damage. (000247a)

WARNING

Electrocution. Potentially lethal voltages are generated by this equipment. Render the equipment safe before attempting repairs or maintenance. Failure to do so could result in death or serious injury. (000187)

WARNING

Accidental Start-up. Disconnect the negative battery cable, then the positive battery cable when working on unit. Failure to do so could result in death or serious injury. (000130)

WARNING

Equipment damage. Only qualified service personnel may install, operate, and maintain this equipment. Failure to follow proper installation requirements could result in death, serious injury, and equipment or property damage. (000182a)

WARNING

Electric shock. Only a trained and licensed electrician should perform wiring and connections to unit. Failure to follow proper installation requirements could result in death, serious injury, and equipment or property damage. (000155a)

WARNING

Moving Parts. Do not wear jewelry when starting or operating this product. Wearing jewelry while starting or operating this product could result in death or serious injury. (000115)

WARNING

Moving Parts. Keep clothing, hair, and appendages away from moving parts. Failure to do so could result in death or serious injury. (000111)

WARNING

Hot Surfaces. When operating machine, do not touch hot surfaces. Keep machine away from combustibles during use. Hot surfaces could result in severe burns or fire. (000108)

WARNING

Equipment and property damage. Do not alter construction of, installation, or block ventilation for generator. Failure to do so could result in unsafe operation or damage to the generator. (000146)

WARNING

Risk of injury. Do not operate or service this machine if not fully alert. Fatigue can impair the ability to service this equipment and could result in death or serious injury. (000215)

WARNING

Injury and equipment damage. Do not use generator as a step. Doing so could result in falling, damaged parts, unsafe equipment operation, and could result in death or serious injury. (000216)

Inspect the generator regularly, and contact an IASD for parts needing repair or replacement.

Exhaust Hazards

DANGER

Asphyxiation. Running engines produce carbon monoxide, a colorless, odorless, poisonous gas. Carbon monoxide, if not avoided, will result in death or serious injury. (000103)

WARNING

Asphyxiation. Always use a battery operated carbon monoxide alarm indoors and installed according to the manufacturer's instructions. Failure to do so could result in death or serious injury. (000178a)

WARNING

Fire hazard. Do not obstruct cooling and ventilating airflow around the generator. Inadequate ventilation could result in fire hazard, possible equipment damage, death or serious injury. (000217)

Electrical Hazards

DANGER

Electrocution. Contact with bare wires, terminals, and connections while generator is running will result in death or serious injury. (000144)

DANGER

Electrocution. Never connect this unit to the electrical system of any building unless a licensed electrician has installed an approved transfer switch. Failure to do so will result in death or serious injury. (000150)

DANGER

Electrical backfeed. Use only approved switchgear to isolate generator from the normal power source. Failure to do so will result in death, serious injury, and equipment damage. (000237)

DANGER

Electrocution. Verify electrical system is properly grounded before applying power. Failure to do so will result in death or serious injury. (000152)

DANGER

Electrocution. Do not wear jewelry while working on this equipment. Doing so will result in death or serious injury. (000188)

DANGER

Electrocution. Water contact with a power source, if not avoided, will result in death or serious injury. (000104)

DANGER

Electrocution. In the event of electrical accident, immediately shut power OFF. Use non-conductive implements to free victim from live conductor. Apply first aid and get medical help. Failure to do so will result in death or serious injury. (000145)

Fire Hazards

WARNING

Fire hazard. Do not obstruct cooling and ventilating airflow around the generator. Inadequate ventilation could result in fire hazard, possible equipment damage, death or serious injury. (000217)

WARNING

Fire and explosion. Installation must comply with all local, state, and national electrical building codes. Noncompliance could result in unsafe operation, equipment damage, death, or serious injury. (000218)

WARNING

Fire hazard. Use only fully-charged fire extinguishers rated "ABC" by the NFPA. Discharged or improperly rated fire extinguishers will not extinguish electrical fires in automatic standby generators. (000219)

WARNING

Consult Manual. Read and understand manual completely before using product. Failure to completely understand manual and product could result in death or serious injury. (000100a)

WARNING

Electrocution. Refer to local codes and standards for safety equipment required when working with a live electrical system. Failure to use required safety equipment could result in death or serious injury.

(000257)

WARNING

Risk of Fire. Unit must be positioned in a manner that prevents combustible material accumulation underneath. Failure to do so could result in death or serious injury. (000147)

Comply with regulations the Occupational Safety and Health Administration (OSHA) has established, or with equivalent standards. Also, verify that the unit is applied, used, and maintained in accordance with the manufacturer's instructions and recommendations. Do nothing that might alter safe application/usage and render the unit in noncompliance with the aforementioned codes, standards, laws, and regulations.

Explosion Hazards

DANGER

Explosion and fire. Fuel and vapors are extremely flammable and explosive. No leakage of fuel is permitted. Keep fire and spark away. Failure to do so will result in death or serious injury. (000192)

DANGER

Explosion and fire. Connection of fuel source must be completed by a qualified professional technician or contractor. Incorrect installation of this unit will result in death, serious injury, and property and equipment damage.

(000151a)

DANGER

Risk of fire. Allow fuel spills to completely dry before starting engine. Failure to do so will result in death or serious injury.

(000174)

WARNING

Risk of Fire. Hot surfaces could ignite combustibles, resulting in fire. Fire could result in death or serious injury.

(000110)

Lifting Hazards

DANGER

Risk of electrocution. Avoid touching overhead power lines when lifting or hoisting generator. Failure to do so will result in death or serious injury. (000245)

WARNING

Personal injury. Excessive weight. Use only appropriate lifting eyes and lifting equipment to lift unit. Improper lifting techniques could result in equipment damage, death or serious injury. (000224)

WARNING

Personal injury. Failure to properly connect lifting cables, chains, or straps could result in death, serious injury, or property damage.

(000346)

WARNING

Personal Injury. Do not use lifting hook if there are signs of damage or corrosion. Doing so could result in death, serious injury, or property damage.

(000349)

WARNING

Personal Injury. Do not use lifting eye if there are signs of damage or corrosion. Doing so could result in death, serious injury, or property damage.

(000433)

WARNING

Personal Injury. Verify all fasteners are properly tightened prior to lifting unit. Failure to do so could result in death, serious injury, or property damage.

(000351)

Battery Hazards

DANGER

Electrocution. Do not wear jewelry while working on this equipment. Doing so will result in death or serious injury.

(000188)

⚠WARNING

Explosion. Do not dispose of batteries in a fire. Batteries are explosive. Electrolyte solution can cause burns and blindness. If electrolyte contacts skin or eyes, flush with water and seek immediate medical attention. (000162)

⚠WARNING

Explosion. Batteries emit explosive gases while charging. Keep fire and spark away. Wear protective gear when working with batteries. Failure to do so could result in death or serious injury. (000137a)

⚠WARNING

Electrical shock. Disconnect battery ground terminal before working on battery or battery wires. Failure to do so could result in death or serious injury. (000164)

⚠WARNING

Risk of burns. Batteries contain sulfuric acid and can cause severe chemical burns. Wear protective gear when working with batteries. Failure to do so could result in death or serious injury. (000138a)

⚠WARNING

Risk of burn. Do not open or mutilate batteries. Batteries contain electrolyte solution which can cause burns and blindness. If electrolyte contacts skin or eyes, flush with water and seek immediate medical attention. (000163a)

⚠WARNING

Explosion hazard. Never add acid to a battery. Add distilled water only. Failure to do so could result in death, serious injury, or equipment damage. (000316)

⚠WARNING

Environmental Hazard. Always recycle batteries at an official recycling center in accordance with all local laws and regulations. Failure to do so could result in environmental damage, death, or serious injury. (000228)

Always recycle batteries in accordance with local laws and regulations. Contact your local solid waste collection site or recycling facility to obtain information on local recycling processes. For more information on battery recycling, visit the Battery Council International website at: ***http://batterycouncil.org***

General Rules

⚠DANGER

Loss of life. Property damage. Installation must always comply with applicable codes, standards, laws and regulations. Failure to do so will result in death or serious injury. (000190)

⚠DANGER

Electrical backfeed. Use only approved switchgear to isolate generator from the normal power source. Failure to do so will result in death, serious injury, and equipment damage. (000237)

⚠WARNING

Equipment damage. Only qualified service personnel may install, operate, and maintain this equipment. Failure to follow proper installation requirements could result in death, serious injury, and equipment or property damage. (000182a)

⚠WARNING

Electrocution. Refer to local codes and standards for safety equipment required when working with a live electrical system. Failure to use required safety equipment could result in death or serious injury. (000257)

- Follow all safety precautions in the owner's manual, installation guidelines, and other documents included with the equipment.
- See NFPA 70E for safety equipment required when working with a live system.
- Never energize a new system without opening all disconnects and breakers.
- Always consult local code for additional requirements for the area where unit is being installed.
- Incorrect installation can result in personal injury and damage to the generator. It may also suspend or void the warranty. All instructions listed below must be followed including location clearances and pipe sizes.

Before You Begin

- Contact local inspector or city hall to be aware of all federal, state, and local codes which could impact installation. Secure all required permits before installing.
- Fully comply with all relevant NEC, NFPA, and OSHA standards, as well as all federal, state, and local building and electric codes. This unit must be installed in accordance with current NFPA 37 and NFPA 70 standards, and any other federal, state,

and local codes for minimum distances from other structures.

- Verify capacity of NG meter or LP tank in regards to providing sufficient fuel for both the unit and other household and operating appliances.

Standards Index

⚠WARNING

Loss of life. This product is not intended to be used in a critical life support application. Failure to adhere to this warning could result in death or serious injury. (000209b)

Strictly comply with all applicable national, state, and local laws, as well as codes or regulations pertaining to the installation of this engine-generator power system. Use the most current version of applicable codes or standards relevant to the local jurisdiction, generator used, and installation site.

NOTE: Not all codes apply to all products and this list is not all-inclusive. In the absence of pertinent local laws and standards, the following publications may be used as a guide (these apply to localities which recognize NFPA and IBC).

1. National Fire Protection Association (NFPA) 70: The NATIONAL ELECTRIC CODE (NEC) *
2. NFPA 10: Standard for Portable Fire Extinguishers *
3. NFPA 30: Flammable and Combustible Liquids Code *
4. NFPA 37: Standard for Stationary Combustion Engines and Gas Turbines *
5. NFPA 54: National Fuel Gas Code *
6. NFPA 58: Standard for Storage and Handling Of Liquefied Petroleum Gases *
7. NFPA 68: Standard On Explosion Protection By Deflagration Venting *
8. NFPA 70E: Standard For Electrical Safety In The Workplace *
9. NFPA 211: Standard for Chimneys, Fireplaces, Vents, and Solid Fuel Burning Appliances *
10. NFPA 220: Standard on Types of Building Construction *
11. NFPA 5000: Building Code *
12. ICC IFGC: International Fuel Gas Code
13. International Building Code **
14. Agricultural Wiring Handbook ***
15. Article X, NATIONAL BUILDING CODE
16. ASAE EP-364.2 Installation and Maintenance of Farm Standby Electric Power ****

This list is not all-inclusive. Check with the Authority Having Local Jurisdiction (AHJ) for any local codes or standards which may be applicable to your jurisdiction. The above listed standards are available from the following internet sources:

* ***www.nfpa.org***

** ***www.iccsafe.org***

*** ***www.rerc.org*** Rural Electricity Resource Council P.O. Box 309 Wilmington, OH 45177-0309

**** ***www.asabe.org*** American Society of Agricultural & Biological Engineers 2950 Niles Road, St. Joseph, MI 49085

Section 2: Installation Planning

Introduction

DANGER

Electrical backfeed. Use only approved switchgear to isolate generator from the normal power source. Failure to do so will result in death, serious injury, and equipment damage. (000237)

IMPORTANT NOTE: Connecting this generator to an electrical system normally supplied by an electric utility shall be by means of a transfer switch, so as to isolate the electric system from the utility distribution system when the generator is operating. Failure to isolate the electric system by these means will result in damage to generator and may also result in injury or death to utility workers due to backfeed of electrical energy.

NOTE: Only an IASD or qualified, competent installation contractors, or electricians thoroughly familiar with applicable codes, standards, and regulations should install this standby electric power system. The installation must strictly comply with all codes, standards, and regulations pertaining to installation.

Unit Drawings

Installation Drawings

See ***Installation Drawings***. Installation drawings show weights, dimensions, clearances, exhaust details, connection locations, wiring stub-ups, lifting locations, and other information. Use the unit specific installation drawings when designing a site installation plan. Thoroughly read NOTES section of each drawing for important details.

Wiring Diagrams

Wiring and schematic diagrams show connection points for control wiring, load wiring, and any service power supply required for battery chargers, block heaters, etc. Always use the unit specific wiring diagrams during planning and installation.

Receiving

Receiving and Unpacking

When applicable, handle shipping cartons and crates with care to avoid damage. Store and unpack cartons with correct side up, as noted by label on shipping carton.

Inspection

Carefully inspect generator and all contents of cartons for any damage that may have occurred during shipment. See shipping documentation for any provisions or guidance when damage is incurred. Correct all damage or deficiencies before installing generator.

Storage Before Installation

Long Term Storage

If unit will be stored (or installed and not started) for six months or more, preserve in accordance with the manufacturer's instructions. Contact an IASD to obtain the Long Term Preservation and Storage Manual (Part No. 0G4018) and the Preservation Checklist (Part No. 0G4018A).

Short Term Storage

Proceed as follows if unit will be stored (or installed and not started) for less than six months:

- All units are provided with an enclosure.
- Place unit on a smooth flat surface. Do not leave unit on shipping pallet, as it leaves the bottom open for entry of dirt, debris, insects, rodents, etc.
- If applicable, cover any exhaust system openings.
- Leave plastic plugs in fuel connection points.
- Use anti-rodent plugs and other enclosure features to prevent entry of birds, small animals, and foreign objects.

Lifting

DANGER

Risk of electrocution. Avoid touching overhead power lines when lifting or hoisting generator. Failure to do so will result in death or serious injury. (000245)

WARNING

Personal injury. Excessive weight. Use only appropriate lifting eyes and lifting equipment to lift unit. Improper lifting techniques could result in equipment damage, death or serious injury. (000224)

Generators weighing more than 900 lbs (408 kg) require the correct tools, equipment, and qualified personnel to be used in all phases of handling and unpacking.

To verify personal safety and prevent damage to the unit, use only correctly sized equipment intended for safe rigging, lifting, and moving of heavy machinery.

Use a spreader bar to prevent damage to unit. **Failure to use a spreader bar will result in scratches and damage to painted surfaces.**

See ***Figure 2-1***. Installation drawings show lifting points for rigging and lifting purposes. Always attach lifting and rigging devices at designated points only. Do not use lifting points of the engine or alternator to move generator.

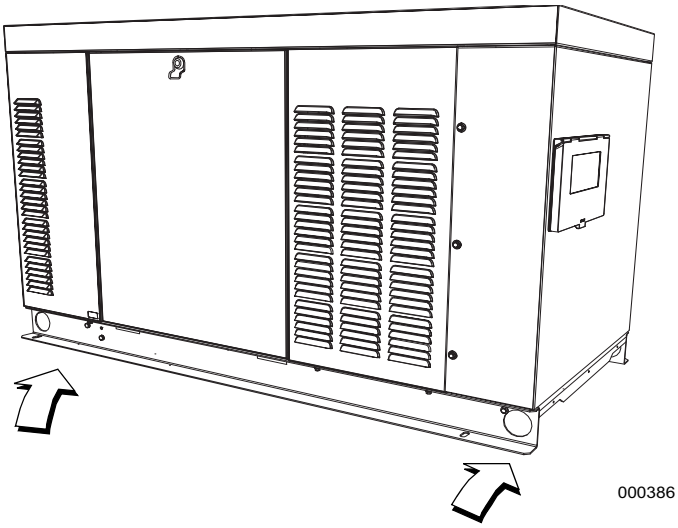

Figure 2-1. Lifting Points (Four Places)

Generator Location

Locate generator so it is readily accessible for maintenance, repair, and firefighting purposes. Comply with code requirements for minimum distance from combustible walls and building openings.

General Location Guidelines

Consider the following:

- The generator, in its protective enclosure, must be installed **outdoors.**
- Supporting structure must be adequate for generator and its accessories.
- Verify installation site is clean, dry, not subject to flooding, and provided with adequate drainage in event of heavy rains.
- Verify installation site permits noise and vibration to be effectively isolated.
- Verify installation site provides easy, ready access to generator for maintenance, repair, and emergency response purposes.
- See ***Figure 3-1***. Keep a minimum clear working space around each side of the generator to facilitate service or maintenance. See NEC Article 110.26 for clarification.
- Verify installation site permits engine exhaust gases to be safely evacuated from inhabited or occupied areas. Consider the direction of prevailing winds to prevent exhaust gases from being carried back to engine area or to fresh air intake vents of nearby buildings.
- Installation site must allow for provision of an adequate fuel supply.
- Verify installation site permits sufficient air flow for cooling and ventilation. Consider proximity of any walls, fences, or other noise abatement or security barriers. Do NOT face radiator discharge end of the enclosure into prevailing wind.
- Consider cold weather kit options and accessories for generator in cold weather locations.
- Verify unit is securely fastened to mounting pad to prevent movement caused by vibration.
- Verify all electrical connections have flexible sections to isolate vibration.
- Verify fuel pressure and pipe is sized correctly and has the appropriate flex hose.

NOTE: Failure to comply with site selection guidelines can result in damage to generator or surrounding area and may cause warranty to be suspended or voided. Extra repair labor or equipment may not be covered under warranty if service access is difficult or restricted.

Weather Considerations

Consider local weather conditions during installation. There are various accessories available to promote fast, reliable starting and operation regardless of local climatic conditions. Optional cold weather kits make engine starting more dependable and reliable.

Section 3: Site Selection and Preparation

Site Selection

Site selection is critical for safe generator operation. It is important to discuss these factors with the installer when selecting a site for generator installation:

- Carbon monoxide
- Fire prevention
- Fresh air for ventilation and cooling
- Water ingress prevention
- Proximity to utilities
- Suitable mounting surface

The following pages describe each of these factors in detail.

NOTE: The term “structure” is used throughout this section to describe the home or building where generator is being installed. Illustrations depict a typical residential home. However, instructions and recommendations presented in this section apply to all structures regardless of type.

Carbon Monoxide

DANGER

Asphyxiation. Running engines produce carbon monoxide, a colorless, odorless, poisonous gas. Carbon monoxide, if not avoided, will result in death or serious injury. (000103)

IMPORTANT NOTE: Move to fresh air immediately and seek medical attention if you feel sick, dizzy, or weak while the generator is running or after it stops.

Generator exhaust contains carbon monoxide (CO)—a poisonous, potentially lethal gas that cannot be seen or smelled. The generator must be installed in a well ventilated area away from windows, doors, and openings. The selected location should not allow exhaust gases to be drawn into structures where people or animals may be present.

Carbon Monoxide Detectors

See ***Figure 3-1***. CO detectors (K) must be installed and used to monitor for CO and to warn individuals about the presence of CO. CO detectors must be installed and tested in accordance with the CO detector manufacturer’s instructions and warnings. Contact local building inspection department for any applicable requirements concerning CO detectors. See NFPA 72, National Fire Alarm and Signaling Code, and Section R315 in the ICC International Residential Code for more information.

IMPORTANT NOTE: Common smoke alarms do NOT detect CO gas. Do not rely on smoke alarms to protect residents or animals from CO. The <u>only</u> way to detect CO is to have functioning CO alarms.

Potential CO Entry Points

See ***Figure 3-1***. Generator exhaust can enter a structure through large openings, such as windows and doors. However, exhaust and CO can also seep into the structure through smaller, less obvious openings.

Protect the Structure

Verify structure itself is correctly caulked and sealed to prevent air from leaking in or out. Voids, cracks, or openings around windows, doors, soffits, pipes, and vents can allow exhaust gas to be drawn into the structure.

Some examples of potential entry points are described and included in, but not limited to, the accompanying table.

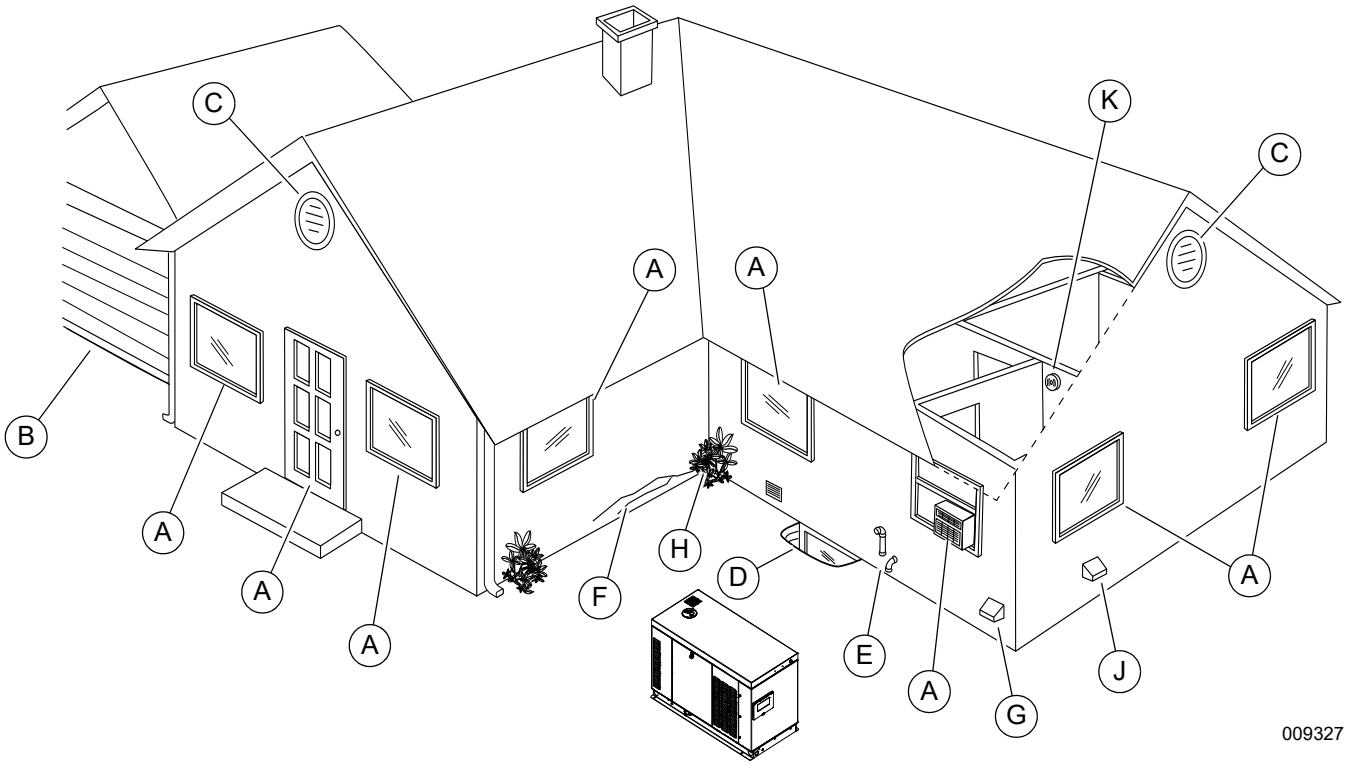

Figure 3-1. Carbon Monoxide—Potential Entry Points

ID	Entry Point	Description / Comments
A	Windows and doors	Architectural details which can be (or are) opened to admit fresh air into the structure.
B	Garage door	CO can leak into garage if door is open, or does not seal correctly when closed.
C	Attic vent	Attic vents, ridge vents, crawl space vents, and soffit vents can all admit generator exhaust.
D	Basement windows	Windows or hatches allowing ventilation to or from lower level of a structure.
E	Furnace intake / exhaust vent	Air intake and exhaust pipes for furnace.
F	Wall cracks	Includes (but not limited to) cracks in wall, foundation, mortar, or air gaps around doors, windows, and pipes. See ***Protect the Structure***.
G	Dryer vent	Exhaust duct for clothes dryer.
H	Airflow restrictions	Structural corners and locations with heavy vegetation restrict airflow. Exhaust gases can collect in such areas.
J	Make up air system	**IMPORTANT NOTE: Mechanical and gravity outdoor air intake openings for HVAC supply air systems shall be located not less than 10 feet (3048mm) horizontally from the generator enclosure. See Section 401 in the ICC Mechanical Code for any additional requirements.**

Fire Prevention

The generator must be installed at a safe distance away from combustible materials. Engine, alternator, and exhaust system components become very hot during operation. Fire risk increases if unit is not correctly ventilated, is not correctly maintained, operates too close to combustible materials, or if fuel leaks exist. Also, accumulations of flammable debris within or outside the generator enclosure may ignite.

Distance Requirements

See ***Figure 3-2***. Minimum clearances must be maintained around the generator enclosure. These clearances are primarily for fire prevention, but also to provide sufficient room for removing front and end panels for maintenance purposes.

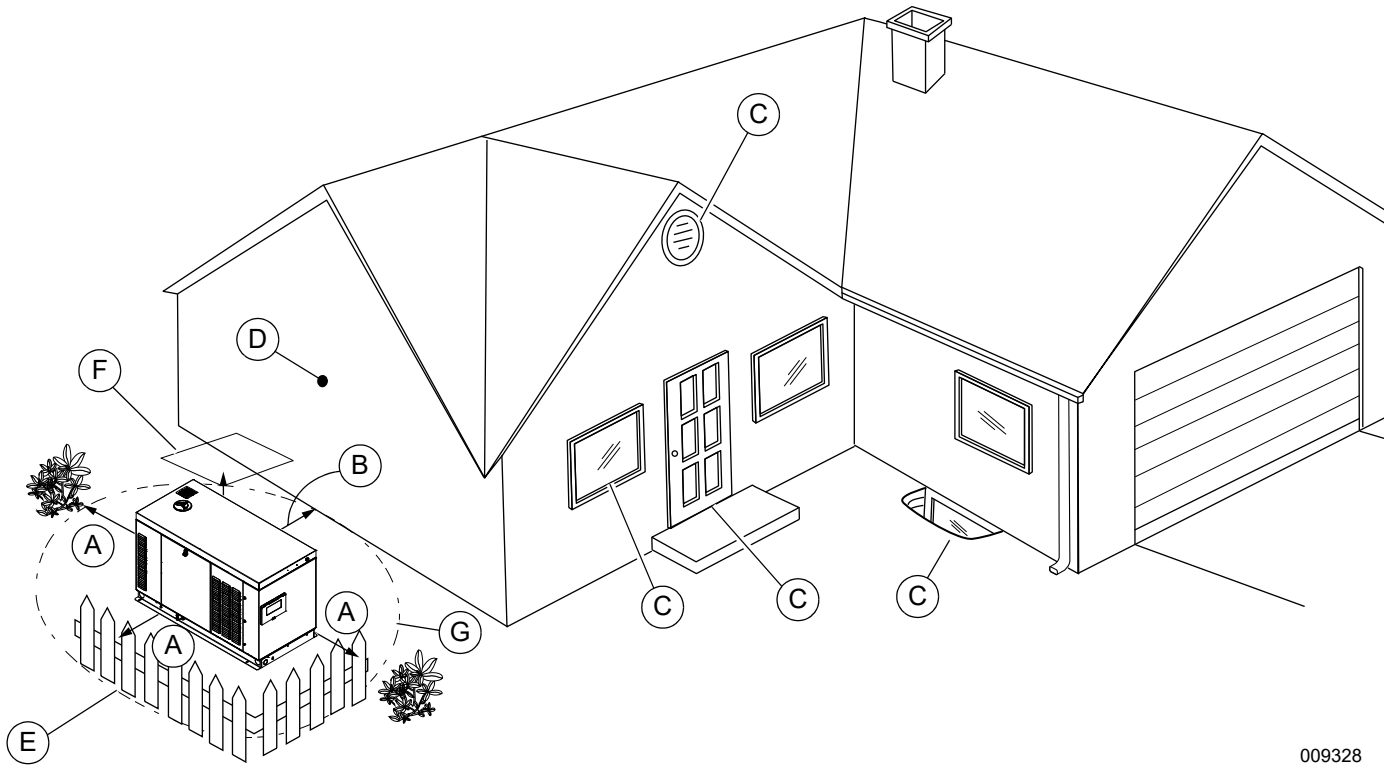

Figure 3-2. Generator Distance Requirements

ID	Description	Definition
A	Front and end clearance	Minimum clearance from the front and ends of generator must be 3 ft (0.91 m). This includes shrubs, bushes, and trees.
B	Rear clearance	**For products NOT showing SWRI on the data plate:** • 5 ft (1.52 m) minimum distance if the wall is **not** fire rated. • 3 ft (0.91 m) minimum distance if the wall is **one hour fire rated**. **If the data plate indicates the product is SWRI rated:** 18 in (47.7 cm) minimum distance from a combustible wall.
C	Windows, vents, and openings	No operable windows, doors, vents, window wells, or openings in the wall are permitted near any point of the generator. See ***Potential CO Entry Points*** for more information.
D	Existing wall	The generator should not be placed closer than 18 in (457 mm) from existing walls.
E	Removable fence	A removable barrier (non-permanent; without footings) installed as a visual surround. Removable fence panels for servicing cannot be placed less than 3 ft (0.91 m) in front of the generator.
F	Overhead clearance	5 ft (1.52 m) minimum distance from any structure, overhang, or projections from wall.
G	Maintenance and servicing	Maneuvering space around generator for performing routine maintenance tasks such as battery replacement and engine service. Do not attempt to conceal generator with shrubs, bushes, or plants. See NEC Article 110.26 for more information.

Fire Codes, Standards, and Guidelines

Generator installation must comply strictly with ICC IFGC, NFPA 37, NFPA 54, NFPA 58, and NFPA 70 standards. These standards prescribe the minimum safe clearances around and above the generator enclosure.

NFPA 37

NFPA 37 is the The National Fire Protection Association's standard for the installation and use of stationary combustion engines. Its requirements limit the spacing of an enclosed generator set from a structure or wall, and require generator to be located where it is readily accessible for maintenance, repair, and first responders.

NFPA 37, Section 4.1.4, Engines Located Outdoors: Engines, and their weatherproof housings if provided, installed outdoors shall be located at least 5 ft (1.52 m) from openings in walls and at least 5 ft (1.52 m) from structures having combustible walls. A minimum separation shall not be required where either of the following conditions exist:

1. The adjacent wall of the structure has a fire resistance rating of at least one hour.
2. The weatherproof enclosure is constructed of non-combustible materials and it has been demonstrated that a fire within the enclosure will not ignite combustible materials outside the enclosure.

Annex A—Explanatory Material

A4.1.4 (2) Means of demonstrating compliance are by means of full scale fire test or by calculation procedures.

Because of the limited spaces frequently available for installation, it has become apparent that exception (2) would be beneficial for many residential and commercial installations. The manufacturer contracted with an independent testing laboratory to run full scale fire tests.

NOTE: The Southwest Research Institute (SwRI) is a nationally recognized third party testing and listing agency. SwRI testing approves 18 in (457 mm) installation minimum from the rear panel of the generator to an adjacent structure for fire protection.

The criteria was to determine the worst case fire scenario within the generator and to determine the ignitability of items outside the engine enclosure at various distances. The enclosure is constructed of non-combustible materials, and the results and conclusions from the independent testing lab indicated that any fire within the generator enclosure would not pose any ignition risk to nearby combustibles or structures, with or without fire service personnel response.

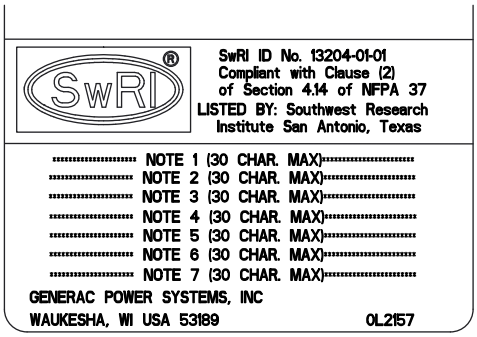

002158

Figure 3-3. Southwest Research Institute Marking

http://www2.swri.org/www2/listprod/DocumentSelection.asp?ProductID=973&IndustryID=2

Based on this testing and the requirements of NFPA 37, Sec 4.1.4, the guidelines for installation of the generators listed above are changed to 18 in (457 mm) from the back side of the generator to a stationary wall or building For adequate maintenance and airflow clearance, the area above the generator should be at least 5 ft (1.52 m) with a minimum of 3 ft (0.91 m) at the front and ends of the enclosure. This includes trees, shrubs, and bushes. Vegetation not in compliance with these clearance parameters could obstruct air flow. In addition, exhaust fumes from the generator could inhibit plant growth. See ***Figure 3-2*** and the accompanying descriptions.

Generator Maintenance

Regular maintenance is crucial for minimizing exhaust emissions and reducing the risk of fire or equipment failure. For example:

- A dirty air filter or low engine oil level may cause engine to overheat.
- Incorrect spark plug gaps may cause engine backfiring and incomplete combustion.

IMPORTANT NOTE: See Maintenance section of generator owner's manual to view a table of scheduled maintenance tasks and procedures. Perform all maintenance tasks as directed.

Fresh Air for Ventilation and Cooling

Install unit where air inlet and outlet openings will not become obstructed by leaves, grass, snow, etc. If prevailing winds will cause blowing or drifting, consider using a windbreak at a safe distance to protect the unit.

Water Ingress Avoidance

- Select a location on high ground where water levels will not rise and flood the generator. This unit should not operate in, or be subjected to, standing water.
- Install unit where rain gutter downspouts, roof runoff, landscape irrigation, water sprinklers, or sump pump discharge does not flood unit or spray enclosure, including any air inlet or outlet openings.
- Excess moisture can cause excess corrosion and decrease life expectancy of the unit.

Proximity to Utilities

- Contact local utility providers and verify proposed site selection meets all required utility placement requirements before installation. This could affect warranty coverage.
- Remember, laws and or codes may regulate distance and location of unit to specific utilities.
- It is recommended to pick a location where the generator is as close as possible to the transfer switch and the fuel supply, while verifying the site location conforms to the rest of the Site Selection section.

NOTE: Be aware one or both sides of generator may need to be accessed in order to perform routine and periodic maintenance.

Transportation Recommendations

Use a suitable cart or equipment to carry generator, including wooden pallet, to installation site. Place cardboard between cart and generator to prevent any damage or scratches to generator.

Do not lift, carry, or move generator by grasping the louvers. Doing so may bend or damage the sheet metal.

Site Preparation

Generator Foundation

Install the generator on a concrete pad or base slab able to support its weight and accessories. A correct foundation is needed to resist dynamic loading and reduce transmitted noise and vibration. The exact composition of the mounting pad must follow standard engineering practices for the required loading and application. **Securely fasten generator to the foundation using suitable grade, size, and style fasteners.** Holes are provided in the base frame for this purpose.

Concrete Pad

Follow all federal, state, and local codes when designing a concrete pad or base slab.

Seat concrete pad on a prepared solid subsurface and use appropriate reinforcing bar or expanded wire mesh. A common specification calls for 2,500 psi (17.24 MPa) concrete reinforced with 8 gauge wire mesh.

Dimensions

Extend concrete pad beyond the frame of the unit at least 3 in (7.62 cm). A concrete pad extending 6 in (15.2 cm) beyond the frame of the unit is suggested to provide a mounting surface for fuel line support, and space for maintenance and repair.

The base pad must be:

- Capable of supporting 125% of the unit wet weight for single unit applications.
- Flat and level to within 0.5 in (13 mm).
- Capable of withstanding severe torque reactions.

To calculate the depth of the concrete pad, the following formula may be used:

$$\textbf{Depth of Base} = \frac{W}{\text{Density} \times B \times L}$$

W = Total wet weight of generator set in pounds (kg)

Density = Density of the concrete:

- 150 pounds per cubic foot
- 2,400 kilograms per cubic foot

B = Foundation width in feet (meters)

L = Foundation length in feet (meters)

Suggested mixture of concrete (by volume) is 1:2:3 of cement, sand, and aggregate with a maximum 4 in (100 mm) slump with a 28 day compression strength of 3,000 psi (20.7 MPa).

Stub-Up Area

For load conduit, auxiliary power conduit (high voltage), and control wiring conduit (low voltage), see unit installation drawings for location and dimensions of the stub-up area. ***Figure 3-4*** illustrates a typical stub opening (A).

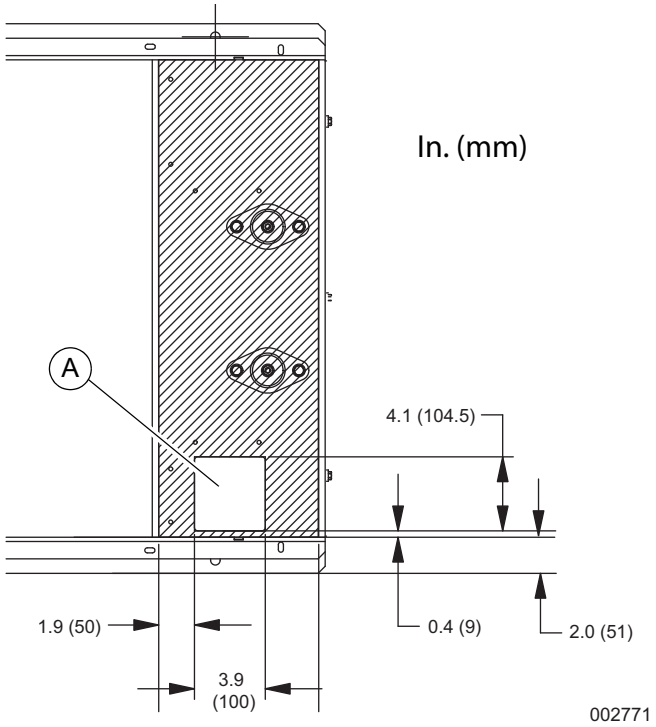

Figure 3-4. Installation Drawing Stub-Up Detail (Typical)

Mounting

Fixed Foundation

Use mounting holes in the base frame to fasten unit to foundation. Always use hardware of a suitable grade, size, and style.

Connections

All electrical connections must have flexible sections to isolate vibration if they connect to the unit base rails. Correctly support and secure all piping before installing the flexible connection.

The surface beneath and beyond the engine and the oil containment system must be noncombustible to a minimum distance of 12 in (300 mm).

Placement on Roofs, Platforms, and Other Supporting Structures

Where required to place generator on a roof, platform, deck, or other supporting structure and an oil containment system consisting of a curb or dike shall be provided in accordance with the requirements in NFPA 37 chapter 4.1.3 and chapter 6. Contact local building inspection department or fire department to determine which noncombustible materials are approved for installation.

Section 4: Gaseous Fuel Systems

Fuel Requirements and Recommendations

DANGER

Explosion and fire. Fuel and vapors are extremely flammable and explosive. No leakage of fuel is permitted. Keep fire and spark away. Failure to do so will result in death or serious injury. (000192)

NOTE: NG is lighter than air and will collect in high areas. LP gas is heavier than air and will settle in low areas.

LP gas should only use a vapor withdrawal system. This type of system uses vapors formed above liquid propane in the storage tank.

The unit will run on NG or LP gas, but has been factory-configured to run on NG.

NOTE: Should the primary fuel need to be changed to LP gas, the fuel system needs to be reconfigured. See ***Fuel System Conversion*** for instructions on converting fuel system.

BTU Content

Recommended fuels should have a BTU content of at least 1,000 BTU/ft^3 (37.26 MJ/m^3) for NG; or at least 2,500 BTU/ft^3 (93.15 MJ/m^3) for LP gas.

NOTE: BTU fuel content information is available from the fuel supplier.

Fuel Pressure

Required fuel pressure for NG and LP gas is 5–14 in water column (1.24–3.48 kPa). Always verify fuel pressure using the appropriate specification sheet for the generator.

NOTE: The primary regulator for LP gas supply is NOT INCLUDED with generator.

NOTE: All pipe sizing, construction, and layout must comply with ICC IFGC, NFPA 54 for NG applications, and NFPA 58 for LP gas applications. Verify fuel pressure NEVER drops below required specification once generator is installed. See the NFPA website at ***www.nfpa.org*** for further information regarding NFPA requirements.

Always contact local fuel suppliers or fire marshal to verify codes and regulations for correct installation. Local codes will mandate correct routing of gaseous fuel line piping around gardens, shrubs, and other landscaping.

Piping strength and connections should be given special consideration when installation takes place in areas at risk for; flooding, tornadoes, hurricanes, earthquakes, and unstable ground.

NOTE: Use an approved pipe sealant or joint compound on all threaded fittings.

NOTE: All installed gaseous fuel piping must be purged and leak tested prior to initial startup in accordance with local codes, standards, and regulations.

Fuel System Conversion

Commercial units are factory-configured and EPA certified with the fuel system ordered. Units in the 22 to 48 kW range are factory-configured for NG, with an additional jet for LP gas that can be reconfigured in the field. 60 kW units come from the factory as ordered, and are **not** reconfigurable in the field.

Any one of the following gaseous fuel systems may be installed:

- Natural Gas (NG)
- LP Gas Vapor Withdrawal

To convert to a different fuel (for example, from NG to LP gas vapor), see owner's manual or contact an IASD.

Gaseous Fuel Properties

Natural Gas

NG is lighter than air. It is found in the gaseous state at normal ambient temperatures and pressures. It is highly explosive and can be ignited by the slightest spark. For this reason, fuel lines must be free of leaks and adequate ventilation is required. Local fuel/gas codes dictate maximum pressure under which NG can be delivered to a site or structure. Supply pressure from utility meter/regulator is usually not the same as required by generator, so a separate primary regulator providing the correct pressure and volume of fuel to generator is required. If local utility source fuel pressure is **less** than required by generator, it is up to local utility to provide volume of fuel at the required pressure.

Liquid Propane Gas

LP gas is heavier than air. The LP gas vapors are explosive and can be ignited by the slightest spark. LP gas is supplied by liquid propane stored in tanks. Propane exists in its liquid form at or below its boiling point (-44 º F [-42 °C]) as well as when stored under pressure. LP tank pressure is dependent on ambient temperature and the liquid volume in the tank, and can be over 200 psi (1,379 kPa). A first-stage regulator at the tank reduces fuel pressure to a lower line pressure value. This line pressure is then reduced to the correct operating pressure and volume for the generator through the use of a second-stage regulator included with the unit.

Definitions

The following definitions are provided for use in this manual:

Term	Description
Allowable Pressure Drop	Design pressure loss in the system under maximum probable flow conditions, from point of delivery to inlet connection of generator, shall be such that supply pressure at the generator is greater than or equal to the minimum pressure required by generator at its full load capacity.
Authority Having Jurisdiction (AHJ) (NFPA-54)	An organization, office, or individual responsible for enforcing requirements of a code or standard, or for approving equipment, materials, an installation, or a procedure.
Cubic Foot (ft^3) of Gas (NFPA-54)	Amount of gas that would occupy 1 ft^3 (0.03 m^3) when at a temperature of 600 °F (316 °C) saturated with water vapor and under a pressure equivalent to 30 in water column (7.47 kPa).
Generator Connection Point	Connection point for fuel supply system to generator is the end of the manufacturer supplied flexible fuel line fitting, which connects to fitting on base frame of generator. An elbow and short nipple can be incorporated to allow the flexible fuel line to be positioned parallel to unit base frame. Size of connection point on base frame is shown in each unit's installation drawing; size of the flexible fuel line (and any elbow and nipple) must be equal to or larger than this connection point. Flexible fuel line must be installed straight without bending, twisting, or kinking.
psi & psig	Measure of pressure in pounds per square inch and pounds per square inch gauge.
In of Water Column	Measure of gaseous fuel pressure in inches of water column: 14 in water column = 3.48 kPa
Primary Regulator	A pressure regulator installed between the service regulator (NG) or first-stage regulator (LP gas) sized to provide pressure and volume required by generator at its full rated load capacity.
Regulator (for LP gas)	
First-Stage Regulator	A pressure regulator for LP gas service designed to reduce pressure from a container to 10.0 psig or less.
High-Pressure Regulator	A pressure regulator for LP gas liquid or vapor service designed to reduce pressure from container to a lower pressure in excess of 1.0 psig.
Second-Stage Regulator	A pressure regulator for LP gas service designed to reduce first-stage regulator outlet pressure to 14 in water column (3.48 kPa) or less. For generator purposes, this is also referred to as the primary regulator.
Regulator (for NG)	
Pressure Regulator	Device placed in a fuel line for reducing, controlling, and maintaining pressure in downstream piping.
Service Regulator	A pressure regulator installed by the servicing fuel supplier to reduce and limit the service line fuel pressure to delivery pressure.

Gaseous Fuel Systems

NG System

The utility gas provider will provide the gas meter. Contact utility gas provider to verify they offer a gas meter that will deliver a sufficient fuel supply for generator at FULL load, in addition to all of gaseous loads on the property. Local utility is also responsible for providing fuel at sufficient volume and pressure to operate the primary regulator. Primary regulator can then provide the correct volume of fuel at the required pressure to generator. If gas pressure (after primary regulator and meter) are not within parameters, a secondary pressure regulator sized sufficiently to the pressure and volume requirements of the generator at FULL load should be installed at minimum of 5 ft (1.5 m) from the generator fuel inlet.

The piping system between the primary pressure regulator and generator must be correctly sized to provide fuel volume required at FULL load, while also staying within pressure range noted on unit specification sheet. This piping system must not be a shared line, unless the dimensions of the piping are large enough to accommodate the additional draw of the generator.

Place secondary pressure regulator a minimum of 5 ft (1.5 m) from generator fuel inlet and follow regulator manufacturer's recommendation for placement and mounting of regulator.

Flexible Fuel Line

Flexible fuel line isolates vibration from generator to reduce possibility of a fuel leak at one of the connection points.

From the primary regulator, fuel flows to generator connection point, which is the end of the manufacturer supplied flexible fuel line. Flexible fuel line can be connected directly to generator connection point (perpendicular to frame rail), or by an elbow and short nipple to frame rail itself (to run parallel to frame rail). The nipple and elbow used must be the same pipe size as flexible fuel line and generator connection point.

When connecting flexible fuel line to generator, use a listed nonmetallic assembly meeting the requirements of ANSI Z21.75/ CSA 6.27—Connectors for Outdoor Gas Appliances and Manufactured Homes or AGA-approved flexible fuel line in accordance with local regulations.

Flexible fuel line must not be connected directly to generator fuel inlet. Always connect flexible fuel line to an approved gas fitting.

NOTE: Follow all installation instructions and warnings provided with flexible fuel line. Do not remove any labels or tags. Installation must always comply with applicable codes, standards, laws, and regulations.

Additional flexible fuel line options can be ordered. Contact an IASD for more information on sizes and availability.

Primary Regulator Outlet

Primary regulator outlet and generator connection point must be sized correctly to provide generator with required volume and pressure when it is operating at FULL load.

The unit-mounted regulator (it may be either a demand regulator or a pressure regulator) and its associated shutoff valves control flow and pressure to unit for correct operation. The fuel pressure required for generator to operate is always measured at inlet of the unit mounted regulator. See ***Fuel Shutoff Valve*** for location of the pressure test connection. Supply pressure and volume must meet requirements described in unit specification sheet. If specifications are not met, generator will not operate correctly and may display symptoms such as hard starting, rough running, inability to carry load, and erratic operation.

Fuel pressure from primary regulator (supplied by installing contractor) to generator's fuel shutoff valve should be between 5–14 in water column (1.24–3.48 kPa). Always verify fuel pressure using the appropriate specification sheet for the generator.

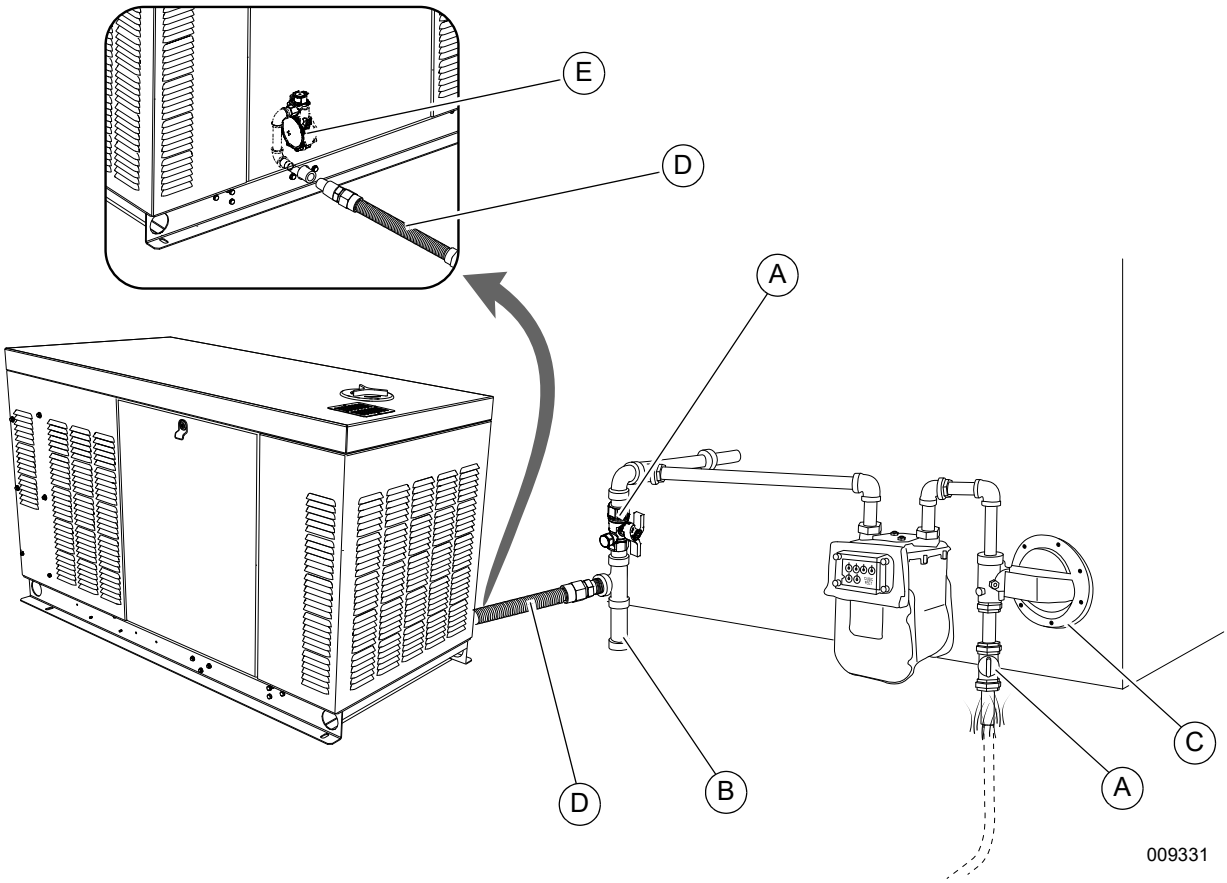

A	Manual fuel shutoff valve	C	Primary regulator	E	Unit mounted regulator
B	Sediment trap	D	Flexible fuel line	—	—

Figure 4-1. Typical NG System

LP Gas System

LP gas uses vapors formed above liquid propane in supply tank. The maximum tank fill capacity is 80% and a minimum of approximately 20% of tank capacity is needed for fuel expansion from liquid to vapor state. Fuel pressure and volume requirements for a LP gas system at the connection point of the generator are listed on the unit specification sheet.

Pressure regulation for vapor withdrawal systems is typically a two-step process. First, by reducing high tank pressure to a lower line pressure with a first-stage regulator, then reducing line pressure to pressure required by unit with a second-stage regulator. Both regulators and associated system piping and valves need to be sized correctly to provide generator with the required volume and pressure of fuel at the generator connection point sufficient to support FULL load.

Fuel pressure from the secondary pressure regulator (supplied by installing contractor) to generator's fuel shutoff valve should be between 11–14 in water column (2.74–3.48 kPa). Always verify fuel pressure using the appropriate specification sheet for the generator.

The piping system connecting outlet of the first-stage regulator to the connection point on the second-stage regulator must be correctly sized to provide fuel volume required by unit at FULL load.

The piping system between outlet of second-stage regulator and generator connection point must be sized to provide fuel volume required by generator at FULL load, while also staying within pressure range noted on the unit specification sheet.

Place secondary pressure regulator a minimum of 5 ft (1.5 m) from generator fuel inlet and follow regulator manufacturer's recommendation for placement and mounting of the regulator.

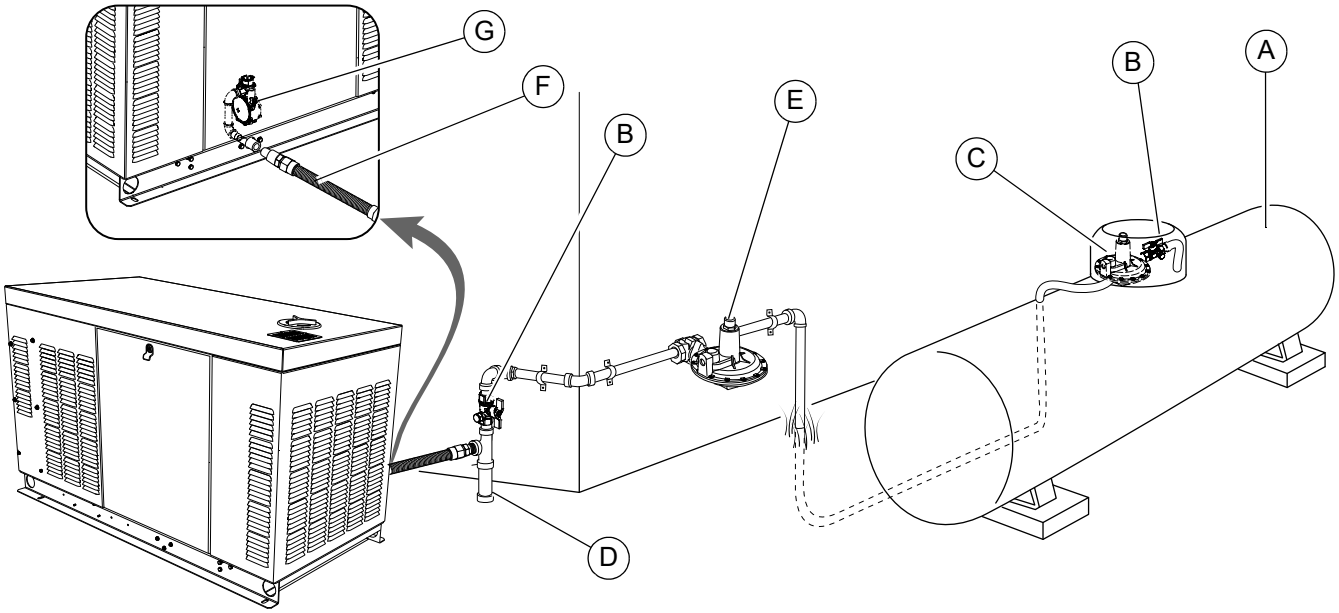

A	Fuel tank	E	Second stage regulator
B	Manual fuel shutoff valve	F	Flexible fuel line
C	First stage regulator with relief valve and pressure tap	G	Unit mounted regulator
D	Sediment trap	—	—

Figure 4-2. Typical LP Gas Withdrawal Fuel System

Sediment Trap

A sediment trap must be installed downstream of the generator fuel shutoff valve, and as close as practical to the inlet of the generator. Sediment trap must be either a tee fitting having a capped nipple installed vertically in the lowest opening of tee fitting, or a device approved for use as an effective sediment trap.

Fuel Pressure Regulators

General

A common cause of a generator not operating correctly is incorrect sizing and installation of gaseous fuel supply system between gas meter (utility source) and generator connection. The fuel supply system consists of a primary regulator to regulate flow and volume from fuel source (utility supply) to generator, and all of the associated piping, fittings, and shutoff valves, both upstream (feeding main meter/regulator) and downstream (between meter and primary regulator), which connect fuel source to connection point on generator. Fuel supply system must be capable of supplying the correct volume of fuel within the correct pressure range to connection point on generator. The volume of fuel and operating pressure required are listed in the technical specifications for the applicable generator. Fuel pressure at unit must remain within specified operating range and not drop below minimum pressure specified.

Best Practices

These are the manufacturer recommended best practices for configuring and sizing fuel supply piping to generators. These best practices have been developed specifically for the manufacturer's product and may not represent conventional gaseous fuel system sizing methods, particularly those used frequently with low volume appliance installations. Compliance with these best practices will help to verify the generator engine will operate correctly under dynamic conditions.

- Minimum distance from primary pressure regulator outlet to generator connection point is covered in the pressure regulator manufacturer's installation instructions. Where not present, or if in doubt, place secondary pressure regulator a minimum of 5 ft (1.5 m) from generator fuel inlet. Do not connect pressure regulator directly to flexible fuel line on generator. Piping between primary pressure regulator and connection point on the generator acts as a reservoir (accumulator) which stores fuel and, therefore, can minimize or maximize changes in delivery pressure that the generator sees during cranking and load changes.
- See ***Fuel Shutoff Valve***. Required fuel pressure to unit is measured before the fuel shutoff solenoids at the inlet to the unit mounted regulator. A 1/8 in pipe port in the pressure regulator body, or in the piping just before the pressure regulator, is provided for this purpose.
- Seasonal supply pressure changes to primary pressure regulator can affect correct operation of the generator. Fuel supply pressure to unit must remain within specified operating parameters as stated in the unit specification sheet. Contact local utility to find out what can be done to correct seasonal changes.
- Use sediment traps.
- Generator must have its own dedicated fuel supply. Do not connect any other loads to the outlet of the primary pressure regulator.

For LP gas systems, due to the nature of the conversion process from LP liquid to LP vapor, consider the following:

- Vaporization rate of a given LP tank is dependent on the liquid level in tank (wetted surface area), ambient temperature around tank, and relative humidity.
- When ambient temperatures are below 40 °F (4 °C), engine fuel consumption is high, and sufficient humidity is present, condensation can occur resulting in frosting of the tank at the liquid level. This condition can lead to a reduced rate of vaporization. See LP tank sizing section for more information.

Operating Fuel Pressure

The unit specification sheet lists operating fuel pressure range, as well as FULL load fuel consumption rate. Pressure range is minimum and maximum acceptable pressures for correct operation of the unit under all operating conditions. Maximum fuel system pressure drop at each condition, that is, static, cranking, running at no load, and running at full load, is 1–2 in water column (0.25–0.50 kPa) as measured at primary fuel pressure regulator. See ***Final Test Procedure*** for definitions of each condition.

Engine Fuel Consumption

Volume of gaseous fuel consumed at various loads is listed in the unit specification sheet. Both NG and LP gas values are provided in cubic feet per hour (CFH). International units of measure are also provided.

Use the following formulas if it becomes necessary to convert CFH to BTUs per hour:

• **Natural Gas:** CFH x 1000 = BTU per hour	• **LP Vapor:** CFH x 2500 = BTU per hour
• **Natural Gas**: CMH x 37.26 = MJ per hour	• **LP Vapor:** CMH x 93.15 = MJ per hour
NG Operating Range: 5–14 in water column (1.24–3.48 kPa)	LP Operating Range: 10–14 in water column (2.49–3.48 kPa)

Fuel Pressure Regulator Sizing

Fuel pressure regulators are designed to automatically adjust flow to meet downstream demand at a required pressure. The typical regulator installed as the primary regulator for a generator is of the direct acting, internally registered design. “Direct acting” means the pressure sensing element acts directly to open the fuel valve and control flow to load while maintaining desired pressure. The pressure sensing element is typically a diaphragm which is opposed by a combination of spring pressure and atmospheric pressure. The valve is the restricting element and consists of some type of variable restriction (cone, poppet, disc) which closes against a fixed seat. Internal registration means the pressure used for sensing comes from within the valve body, usually through a passage from the secondary side (outlet) to the sensing diaphragm.

The primary regulator must be sized to provide required flow at rated pressure to generator at its full load capacity. Generator fuel consumption values and required operating pressures are listed on unit specification sheet.

The manufacturer recommends primary pressure regulator be sized for at least 110% of generator’s required fuel consumption at FULL load, and pressure regulator provide no more than a 1–2 in water column (0.25–0.50 kPa) pressure drop at each operating condition; static, cranking, running at no load, and running at full load.

Various regulator manufacturers provide sizing tables, flow capacity, pressure drop tables, and distributors who will help size a regulator correctly to a system.

Recommended Fuel Pressure Regulators

Use only fuel pressure regulators marked as “direct acting.”

Primary Fuel Pressure Regulator

The following are the manufacturer’s recommendations for specifying, sizing, and installing the primary fuel pressure regulator.

1. Verify regulator:
   - is sized to have a fuel flow delivery rating equal to fuel consumption requirements of generator.

NOTE: The recommended selection for orifice diameters is to use smallest orifice that will still provide a CFH fuel flow rate at least 1.1 times greater than the required full load CFH rating of generator.

   - is approved for a mechanized engine application.
   - has a spring rating within range of fuel pressure listed in the generator specification sheet.
   - has an accuracy rating of 1% or less and/or have a maximum allowable pressure droop rate of 1–2 in water column (0.25–0.50 kPa).

NOTE: “Droop” is reduction of outlet pressure experienced by pressure-reducing regulators as flow rate increases. It is stated as a percent, in inches of water column, or in kPa, and indicates the difference between outlet pressure at low flow rates and outlet pressure at the published maximum flow rate. Droop is also called offset or proportional band. For correct generator operation, a maximum of 1–2 in water column (0.25–0.50 kPa) droop is required at each operating condition; static, cranking, running at no load, and running at FULL load.

2. Verify generator has a dedicated fuel supply which is not shared with **any** other appliances (furnace, water heaters, ranges, etc.).
3. Verify inlet fuel pressure measured at pressure regulator body inlet connection when pressure regulator appears unable to pass published flow rate. Supply piping up to regulator can cause significant flowing pressure losses.
4. Verify pressure regulator is flowing at least 5% of normal operating flow when adjusting pressure set point.
5. Expect approximately a 1 °F (0.5 °C) drop in fuel temperature for every 15 psid (differential) across regulator due to natural refrigeration effect.

NOTE: Freezing is often a problem when ambient temperature is between 30–45 °F (-1–7 °C), particularly with LP gas systems.

6. Point vents down to help avoid accumulation of water condensation or other materials in spring case.
7. Keep vents open. Do not use long, small diameter vent lines. Follow the rule-of-thumb: use the next nominal pipe size for every 10 ft (3 m) of vent line, and use 3 ft (0.9 m) of vent line for every elbow in the line.
8. The connection point on generator is the end of manufacturer supplied flexible fuel line. The flexible fuel line is the same size as the connection point on generator frame rail (see installation drawings). It is permissible to install one elbow (90º) and a short nipple between flexible fuel line and frame rail connection point to allow flexible fuel line to parallel frame rail for installation purposes.

Pipe Sizing Considerations

General

Contact a local fuel distributor or licensed installer when sizing and installing piping for any gaseous fuel supply system. When using a local fuel distributor or installer, verify they have correct documentation to support their recommendations. Fuel system requirements and best practices conveyed in this manual must be provided to the representative responsible for sizing fuel system. The final test of the system is measuring fuel pressure as described in ***Fuel Shutoff Valve***. The fuel supply system is not correct if pressure requirements are not met.

There are several pipe sizing programs available for use on the Internet and from various manufacturers. If used, it is highly recommended the minimum pressure drop value always be used (0.5 in water column [0.12 kPa] or less). This verifies piping system is sized correctly to handle generator volume at full load, and during cranking and load transients, while also remaining above minimum operating fuel pressure.

The following general rules apply to piping of gaseous fuel systems:

- Use black iron piping or other approved fuel line. Fuel line must be rigidly mounted and protected against vibration.
- Install supplied or recommended length of flexible fuel line between generator connection point and the rigid supply piping. Do not install flexible fuel line underground or in contact with the ground.

NOTE: Some manufacturers offer flexible fuel line specifically designed to permit bends. Do not allow any bends, twists, or kinks in the installation unless certain the flexible fuel line is approved for that purpose. Contact flexible fuel line manufacturer for specifications.

- Install a sediment trap. (Contact local AHJ for requirements.)
- Correctly size piping to maintain required supply pressure and volume under varying load conditions.
- Correctly purge and leak test installed piping.
- Use an approved pipe sealant or joint compound on all threaded fittings to reduce possibility of leakage.
- Make provision for a fuel shutoff valve near unit. Verify fuel shutoff valve is installed correctly and works correctly.
- Inspect entire pipe run for leaks using suitable methods.

Table 4-1. NG Pipe Sizing

NG 5–14 in of Water Column (1.24–3.48 kPa)							
Table values are maximum pipe run in ft (m)							
kW	**0.75 in (1.9 cm)**	**1 in (2.5 cm)**	**1.25 in (3.2 cm)**	**1.5 in (3.8 cm)**	**2 in (5.1 cm)**	**2.5 in (6.4 cm)**	**3 in (7.7 cm)**
RG 22	10 (2.5)	30 (7.6)	115 (29.2)	250 (63.5)	—	—	—
25 and 30	10 (2.5)	50 (12.7)	200 (50.8)	450 (114.3)	—	—	—
27	—	20 (5.1)	80 (20.3)	175 (44.4)	550 (139.7)	—	—
32	—	20 (5.1)	90 (22.9)	175 (44.4)	600 (152.4)	—	—
36	—	10 (2.5)	35 (10.7)	80 (20.3)	250 (63.5)	—	—
38	—	10 (2.5)	70 (21.4)	150 (38.1)	500 (152.4)	—	—
45	—	—	20 (5.1)	50 (12.7)	175 (44.4)	400 (121.9)	—
48	—	10 (2.5)	30 (7.6)	75 (22.9)	250 (63.5)	600 (182.9)	—
60	—	—	10 (2.5)	30 (7.6)	100 (30.45)	200 (60.9)	700 (213.4)

Note: Size the fuel pipe to the sizing charts or to local codes. When installing other than Sch. 40 black pipe, see manufacturer's sizing charts.

The liquid-cooled generator is not a constant flow appliance. The fuel pipe was sized large enough to supply at least 100% of the generator BTU/hr rating.

Natural Gas

- 1 ft^3 (28.31 L) = 1,000 BTU (1.055 MJ)
- 1 therm = 100,000 BTU (105.5 MJ)
- Fuel consumption = 13,000–16,000 BTU per kW/hr

Pressure

1 in mercury = 13.61 in water column
1 in water column = 0.036 psi
11–14 in water column = 0.396 psi to 0.50 psi

Note:

- Pipe sizing is based on 0.5 in water column (0.12 kPa) pressure drop.
- Sizing includes a nominal number of elbows and tees.
- Please verify adequate service and meter sizing.
- Tables based on black pipe.

Table 4-2. LP Gas Pipe Sizing

LP Gas 11–14 in of Water Column (2.74–3.48 kPa)							
Table values are maximum pipe run in ft (m)							
kW	**0.75 in (1.9 cm)**	**1 in (2.5 cm)**	**1.25 in (3.2 cm)**	**1.5 in (3.8 cm)**	**2 in (5.1 cm)**	**2.5 in (6.4 cm)**	**3 in (7.7 cm)**
RG 22	20 (5.1)	100 (30.45)	400 (121.9)	—	—	—	—
25 and 30	50 (12.7)	200 (50.8)	800 (243.8)	—	—	—	—
27	15 (4.6)	70 (21.4)	300 (91.4)	625 (190.5)	—	—	—
32	10 (2.5)	60 (18.3)	280 (85.3)	550 (167.6)	—	—	—
36	—	20 (5.1)	150 (45.7)	325 (99.1)	950 (289.6)	—	—
38	10 (2.5)	35 (10.7)	200 (60.9)	450 (137.2)	—	—	—
45	—	10 (2.5)	80 (24.4)	200 (60.9)	600 (182.9)	—	—
48	—	10 (2.5)	80 (24.4)	200 (60.9)	600 (182.9)	—	—
60	—	10 (2.5)	40 (12.2)	100 (30.5)	350 (106.7)	—	—

Note: Size fuel pipe to the sizing charts or to local codes. When installing other than Sch. 40 black pipe, see manufacturer's sizing charts.

The liquid-cooled generator is not a constant flow appliance. The fuel pipe was sized large enough to supply at least 100% of the generator BTU/hr rating.

LPG

- 8.55 ft^3/lb (548.02 L/kg)
- 4.24 lbs/gal (0.51 kg/L)
- 2500 BTU/ft^3 (93.2 kJ/L)
- 36.3 ft^3 = 1 gal (0.272 m^3/L)

Pressure
1 in water column = 0.25 kPa
11–14 in water column = 2.74–3.48 kPa

Note:

- Pipe sizing is based on 0.5 in water column (0.12 kPa) pressure drop.
- Sizing includes a nominal number of elbows and tees.
- Verify adequate service and meter sizing.
- Tables based on black pipe.

Sizing LP Tanks for LP Gas Withdrawal

The manufacturer recommends the installer contact a reputable LP gas supplier when sizing LP gas storage tanks and the associated pressure regulators and piping systems. Many factors come into play when working with LP in either its vapor or liquid form.

The operation of an LP gas system depends on vaporization of liquid propane stored in the tanks. As vapor above liquid propane level is withdrawn, pressure in LP gas tank decreases. This change in pressure causes LP gas to "boil" in order to restore pressure equilibrium. The liquid propane in the tank uses the temperature difference between its boiling point (-44 °F [-42 °C] for propane) and the outside temperature to extract enough heat to enable vaporization (boiling). Only liquid in contact with LP gas tank wall absorbs heat from outside. The area of LP gas tank where liquid is in contact with LP gas tank wall is referred to as the "wetted surface area". Cold weather results in a reduced tank vaporization capacity because there is less heat energy available to boil off liquid propane into vapor. The wetted surface area of LP gas tank must be large enough to sustain vaporization rate required by generator. Depending on relative humidity and ambient temperature, frosting can occur on outside of LP gas tank when it is in use. This condition further inhibits the heat transfer required to sustain vaporization.

Several factors affect rate of vaporization for LP gas tanks:

- Size of tank (wetted surface area). As wetted surface area decreases, rate of vaporization decreases.
- Lowest liquid level tank will be allowed to reach (relates directly to wetted surface area). Typical maximum fill level for LP gas tanks is 80%, and lowest recommended operating level is 20%. This provides a volume equivalent to 60% of LP gas tank capacity to be used to calculate run time. Most tank sizing tables provide vaporization rate of LP gas tank at lowest allowable level (20%); any tank level above this point will have a higher vaporization rate.
- Lowest normal temperature expected. Typical tank tables provide vaporization rates at 40 °F, 20 °F, and 0 ºF (4 °C, -7 °C, and -18 °C). For temperatures below 0 °F (-18 °C), contact a reputable LP gas dealer for options.
- Mean relative humidity.

The following information is required to size an LP tank for a desired run time:

- Maximum vapor consumption of generator (in BTU/hr) at FULL load. The specification sheet for the

generator will list fuel consumption rate, usually in ft^3/hr. To convert CFH to BTU/hr, multiply by 2,520.

- Fuel consumption rate in gallons per hour (gph) with generator at FULL load. To convert CFH (propane vapor) to gph, divide by 36.38. To convert BTU/hr to gph, divide by 91,502.
- Desired run time.
- Minimum operating temperature expected.

The most important thing to consider when sizing LP gas tanks for vapor withdrawal is the vaporization rate of LP gas tank at minimum temperature expected, and at minimum fuel level tank will be allowed to reach. Vaporization rates shown in ***Table 4-3*** are based on the tank at 20% fill capacity.

1. Multiply gph fuel consumption rate of generator at FULL load by longest run time expected/desired.
2. Determine fuel consumption in BTU/hr with generator at FULL load.
3. Determine lowest expected operating temperature.
4. See ***Table 4-3***. Using both Minimum Operating Temperature and Tank Vaporization Capacity columns, find the BTU/hr vaporization rate of the generator at FULL load corresponding to the lowest expected operating temperature.
5. See column 2, and note the Available Tank Capacity. If it is greater than total run time fuel consumption, see column 1 – this is the correct size tank required. If it is less than total run time fuel consumption, see next larger tank size. Verify lowest operating temperature and tank vaporization capacity.

Table 4-3. Vaporization Rates

Total Tank Capacity gal (L) See Note 1	Available Tank Capacity gal (L) See Note 2	Minimum Operating Temperature °F (°C)	Tank Vaporization Capacity BTU/hr (MJ/hr) See Note 3	Length in (cm)	Diameter in (cm)
250 (946.4)	150 (567.8)	40 (4.4) 20 (-6.6) 0 (-17.8)	507,600 (535.5) 338,400 (357) 169,200 (178.5)	94 (238.8)	30 (76.2)
325 (1,230.3)	195 (768.2)	40 (4.4) 20 (-6.6) 0 (-17.8)	642,600 (683.3) 428,400 (452) 214,200 (226)	119 (302.3)	30 (76.2)
500 (1,892.7)	300 (1,135.6)	40 (4.4) 20 (-6.6) 0 (-17.8)	792,540 (836.2) 528,360 (557.4) 264,180 (278.7)	119 (302.3)	37 (93.9)
850 (3,217.6)	510 (1,930.6)	40 (4.4) 20 (-6.6) 0 (-17.8)	1,217,700 (1,284.7) 811,800 (856.5) 405,900 (428.2)	165 (419.1)	41 (104.1)
1,000 (3,785.4)	600 (2,271.2)	40 (4.4) 20 (-6.6) 0 (-17.8)	1,416,960 (1,495) 944,640 (996.6) 472,620 (498.6)	192 (487.7)	41 (104.1)

Note 1: Minimum tank size should be sized large enough to provide correct fuel capacity to generator at full load. Contact a LP gas provider for correct tank sizing.
Note 2: Available tank capacity is approximately 60% of total fill capacity. This is based on a maximum fill level of 80% and a minimum operating level of 20% (80% - 20% = 60%).
Note 3: Vaporization capacity shown is based on a tank level of 20%. This represents the smallest allowable wetted surface area of the liquid in the tank. As liquid propane level goes up, wetted surface area and vaporization rate increases.

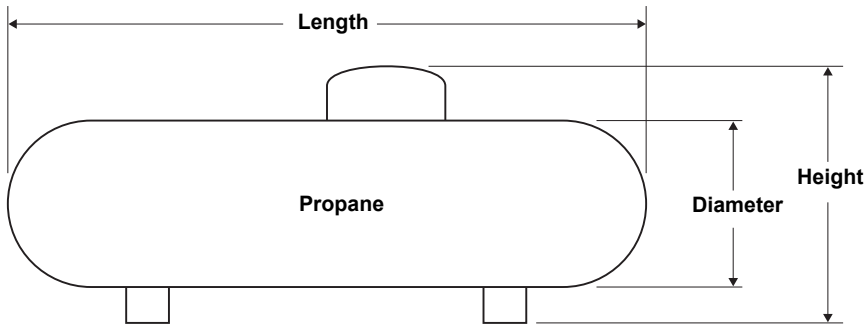

Figure 4-3. Typical Propane Tank Dimensions

Propane conversion figures:

- 36.38 ft^3 = 90,500 BTU = 1 gal
- 1 lb = 21,500 BTU = 8.56 ft^3
- 2500 BTU = 1 ft^3
- 0.001 m^3 = 21 MJ = 1 L
- 1 kg = 10.3 MJ = 0.11 m^3
- 1.13 MJ = 1 m^3

Final Operating Test

A correctly configured and sized fuel system provides the fuel volume and fuel pressure required for the generator set to operate correctly in all modes of operation. To verify correct fuel system operation, a series of tests must be performed as described below.

Fuel Shutoff Valve

Most applications will require an external manual fuel shutoff valve on the fuel line. The fuel shutoff valve must be readily accessible. Local codes determine correct location.

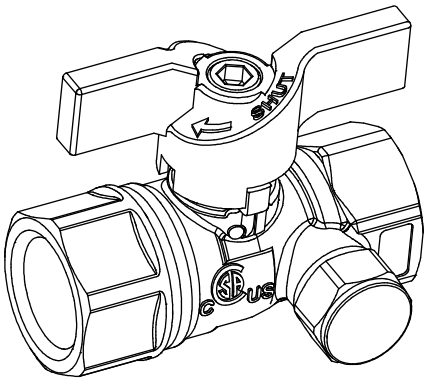

000743

Figure 4-4. Fuel Shutoff Valve with Manometer Port

NOTE: ***Figure 4-4*** illustrates a fuel shutoff valve with a manometer port for making fuel pressure checks. This accessory fuel shutoff valve permits making pressure checks without going into the generator enclosure.

Valves available through Generac and IASD's:

- 3/4 in pressure rated ball valve, part number 0K8754
- 1 in pressure rated ball valve; part number 0K8184
- 1-1/4 in pressure rated ball valve; part number 0L2844
- 1-1/2 in ball valve; part number 0L2856
- 2 in ball valve; part number 0L2846

Fuel Pressure Test Port Location

Using a suitable pressure gauge or water manometer, measure fuel pressure to the generator at a test port located before the fuel solenoid shutoff valve(s).

See A of ***Figure 4-5***. On units using demand type fuel regulator(s), there may be a factory-installed 1/8 in pipe port in a tee fitting connected to the low pressure switch.

See B of ***Figure 4-5***. If unit has a low pressure switch without the tee, install a tee and plug it between the low pressure switch and the test port on the fuel regulator body using a suitable pipe dope. Use only the upper port on fuel regulator body, as it detects supply fuel pressure even when the unit solenoid valve is closed. This allows static fuel pressure to be measured, as well as fuel pressure when cranking, while running at no load, and while running at full load.

See C of ***Figure 4-5***. Factory installed at the test point, some units may be provided with a special test port plug known as a "Pete's Plug®." The plug allows fuel pressure test readings to be taken quickly without leaving costly gauges installed in the fuel line.

Use the "Pete's Plug" as follows:

1. Clean and lubricate gauge adapter probe with a small amount of petroleum jelly or silicone grease.
2. Assemble gauge adapter.
3. Screw barbed fitting into gauge adapter using the appropriate sealant.
4. Install fuel line of correct pressure gauge onto barbed fitting.
5. Slowly unscrew protective cap from test port plug.

NOTE: Quickly tighten cap if escaping gas or liquid is heard or felt. Replace plug if faulty.

6. Insert gauge adapter into test port plug and secure.
7. Remove gauge adapter probe and screw protective cap onto fuel pressure test port plug once fuel pressure reading is obtained.

NOTE: Take necessary readings as quickly as possible. Severe deformation of valves may occur if gauge adapter probe is left in test port plug for a period of hours or days.

NOTE: Below 45 °F (7 °C), the neoprene core of the plug does not recover its original shape as rapidly as it would at higher temperatures. Upon removal of gauge adapter probe, valves may not close fully and immediately, or they may remain slightly open until operating temperature is above 45 °F (7 °C). Lower pressures and the length of time gauge adapter probe is inserted can also affect valve closing rate. The protective cap is provided to eliminate the small amount of leakage that might occur following removal of the gauge adapter probe.

8. Tighten protective cap to prevent tampering.

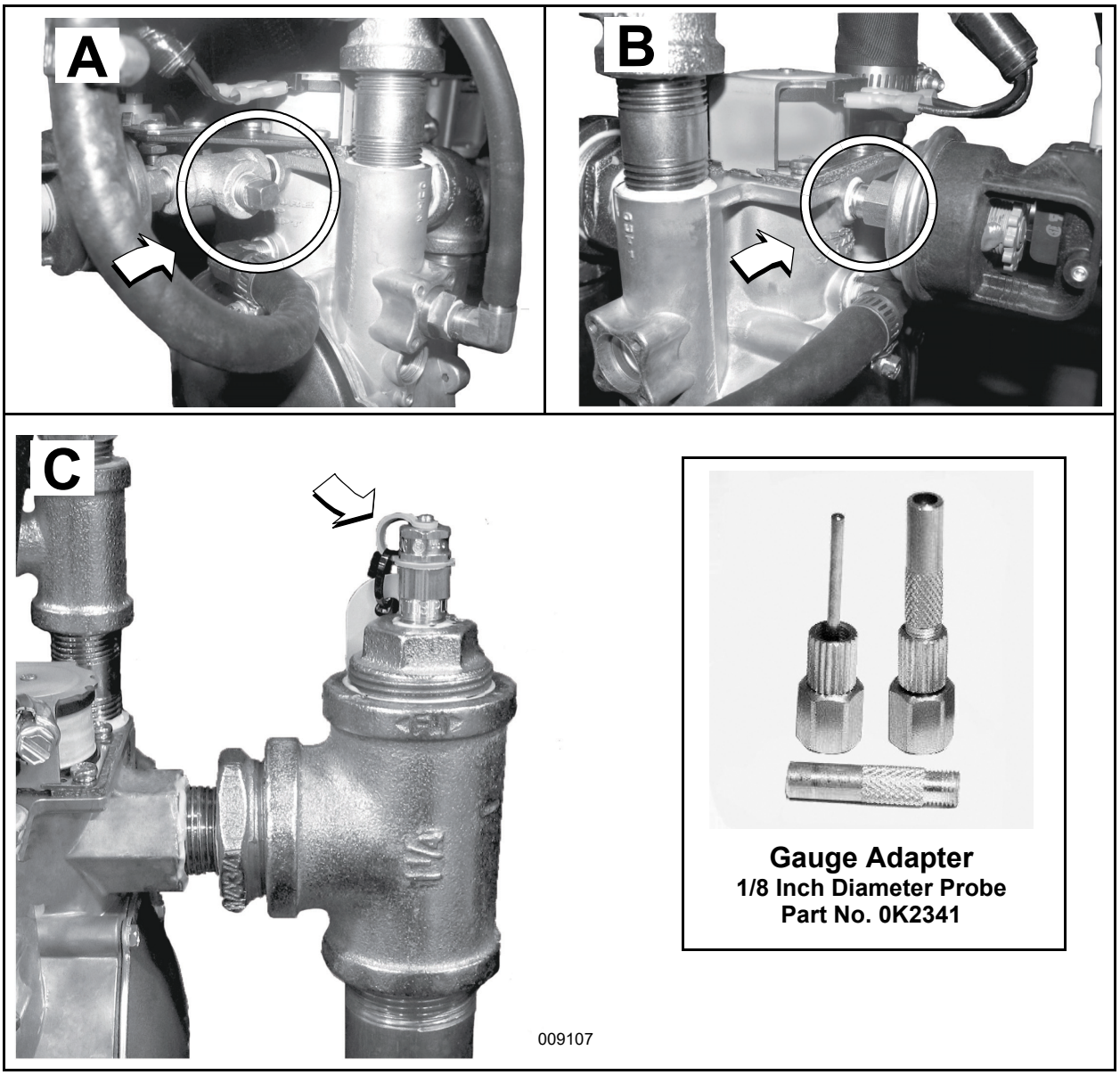

Figure 4-5. Fuel Pressure Test Points

Final Test Procedure

The following test must be performed at startup to document and validate fuel system operation. It requires a load bank connected to the unit, or a combination of load bank and system load, to bring unit to its full rated kW load capacity.

Measure fuel supply pressure under each of the following conditions:

1. **Static Pressure:** Fuel supply pressure when unit is not running. Must not exceed maximum pressure listed in the unit specification sheet.
2. **Cranking Pressure:** Fuel supply pressure when unit is cranking. Must not drop more than 1 in water column (0.25 kPa) below *Static Pressure* or below minimum pressure listed in the unit specification sheet. If it does, it may indicate fuel supply piping is not correctly sized, or primary fuel regulator is incorrectly sized, or mounted too close to the generator connection point. Unit may experience hard starting, or will not perform as expected at full load or during load transients.
3. **Running—No Load Pressure:** Fuel supply pressure when unit is running at rated frequency and voltage with no load. Must be at or slightly below maximum pressure as listed in the unit specification sheet.
4. **Running—Full Load Pressure:** Fuel supply pressure when unit is running with full rated load applied (kW). Fuel supply pressure should not drop more than 1–2 in water column (0.25–0.50 kPa) from the *Running—No Load Pressure* and must NEVER drop below minimum pressure listed in the unit specification sheet.

This page intentionally left blank.

Section 5: Electrical System

General Information

All wiring must be correctly sized, routed, supported, and connected. All wiring must comply with NEC and local codes.

The generator uses Customer Connection Interface (CCI) panels to separate high voltage and customer control wiring connections. These two panels are clearly labeled. Wiring diagrams for each specific unit show connection points in their corresponding sections. Terminal boards are labeled and correspond to the same terminal connections shown in the wiring diagrams. Always use unit specific wiring diagrams when making wiring connections.

NOTE: See ***Alternator AC Lead Connections***.

Connecting Generator Feeder Conductors

DANGER

Electrocution. Turn utility and emergency power supplies to OFF before connecting power source and load lines. Failure to do so will result in death or serious injury. (000116)

CAUTION

Equipment damage. Verify all conductors are tightened to the factory specified torque value. Failure to do so could result in damage to the switch base.

(000120)

NOTE: Installation and interconnection diagrams are provided at the back of this manual.

NOTE: All installations must comply with national, state, and local codes. It is the responsibility of the installer to perform an installation that will pass final electrical inspection.

Generator supply connection is made at the generator disconnect circuit breaker terminals. Conductor sizes must be adequate to handle the maximum current to which they will be subjected, based on the 75 °C column of tables, charts, etc., used to size conductors. Installation must comply fully with all applicable codes, standards, and regulations.

All power cables can enter enclosure through knockouts provided.

NOTE: Apply corrosion inhibitor to conductors if aluminum conductors are used. Carefully wipe away any excess corrosion inhibitor after tightening terminal lugs.

Tighten terminal lugs to torque values noted on decal located on the inside of the door. Carefully wipe away any excess corrosion inhibitor after tightening terminal lugs.

Proceed as follows to connect generator conductors to marked terminal lugs in generator:

1. See ***Figure 5-1***. Connect generator conductors to disconnect circuit breaker.

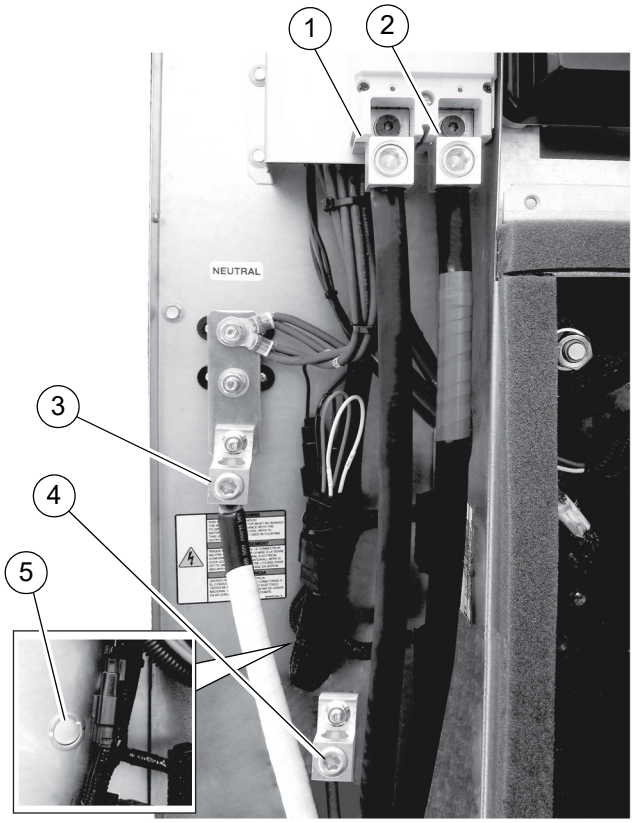

001758

Load Wiring Connections			
1	E1	4	Ground
2	E2	5	Knock Out Plug (Cold Weather Kit)
3	Neutral		

Notes:
Single-phase installation shown.
See ***Figure 5-4*** for typical control wiring connections.

Figure 5-1. High Voltage Connections (Typical)

2. Connect generator neutral to neutral terminal bar.
3. Connect equipment ground to equipment ground lug.

Connecting Control Circuit Wires

Control system interconnections may consist of N1, N2, and T1, and leads 23 and 194. The generator control wiring is a Class 1 signaling circuit. See instruction manual of specific engine generator for wiring connection details. Recommended wire gauge sizes for wiring depends on length of wire, as recommended in the following chart:

Maximum Wire Length	Recommended Wire Size
1–115 ft (0.30–35 m)	No. 18 AWG
116–185 ft (36–56 m)	No. 16 AWG
186–295 ft (57–89 m)	No. 14 AWG
296–460 ft (90–140 m)	No. 12 AWG

Exception: Conductors of AC and DC circuits, rated 1,000 volts nominal or less, shall be permitted to occupy the same equipment, cable, or conduit. All conductors shall have an insulation rating equal to at least the maximum circuit voltage applied to any conductor within the equipment, cable, or conduit. See NEC 300.3(C)(1).

Removing Rear Panel and Stub-Up Cover

1. See *Figure 5-2*. Remove six screws with nylon washers to release rear panel (A) from enclosure. For best results, rotate left side of panel outward away from enclosure before disengaging right side.

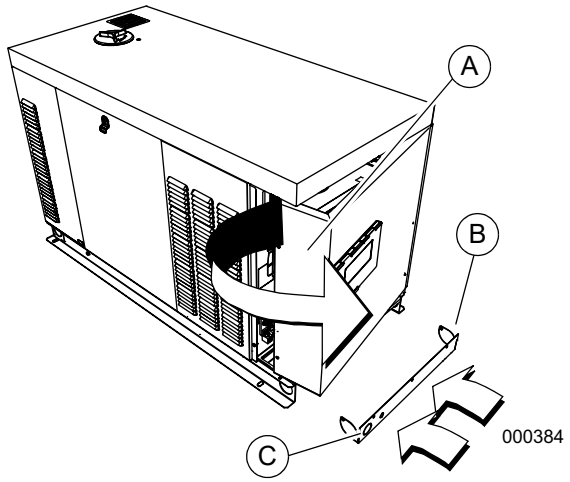

Figure 5-2. Remove Rear Panel and Stub-Up Cover

2. Remove four screws with nylon washers to release fascia from control panel.
3. The stub-up cover (B) and five screws with flat washers are shipped loose and found inside the enclosure. An optional knock-out (C) is provided.

Table 5-1. Frame Breakers

Frame Breaker	Generac 225 AF 2 Pole	Generac 225 AF 3 Pole	Generac 400 AF 2 Pole	Generac 400 AF 3 Pole
Range	125A-200A	50A-200A	225A-400A	225A-400A
Wire Type	Cu/Al	Cu/Al	Cu/Al	Cu/Al
Wire Temp. Rating	167 °F (75 °C)	167 °F (75 °C)	167 °F (75 °C)	167 °F (75 °C)
Lug AWG Range (Number of Conductors)	6-350 kcmil (1)	6-350 kcmil (1)	1/0 -250 kcmil (2) or 4-600 kcmil (1)	1/0-250 kcmil (2) or 4-600 kcmil (1)

NOTE: Generac frame breakers are rated at an 80% continuous load rating. Frame breaker torque specs are on the breaker data tag.

Typical Load Leads and Control Wiring in Stub-Up

Figure 5-3 is for reference only. See installation drawings for unit-specific details.

NOTE: See 300.3(C) and Article 725 in the NEC for routing of control wires and power wires.

NOTE: A single conduit is permitted.

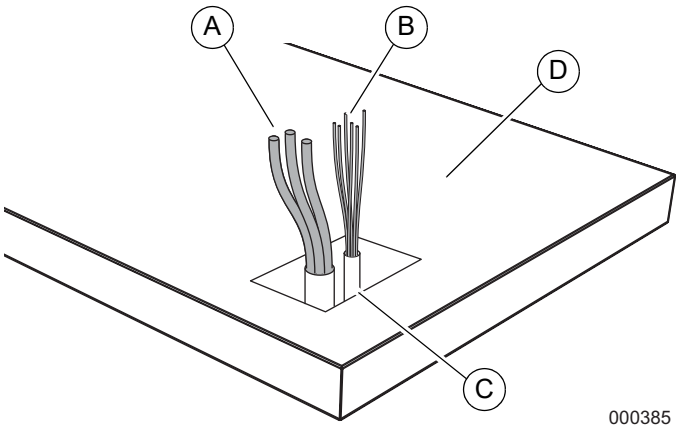

A	Load leads	C	Stub-ups
B	Control wiring	D	Concrete pad

Figure 5-3. Typical Load Leads and Control Wiring in Stub-Up

Customer Load Wiring

Customer load wiring consists of single-phase or three-phase connections between generator main line circuit breaker (MLCB) and transfer switch. The wiring connects to lugs E1, E2, (and E3, if three-phase on MLCB), neutral, and equipment ground at generator, and runs to corresponding lugs in transfer switch. All load wires, neutral, and ground should be marked and terminated in the correct lugs in transfer switch. Verify all wiring is correctly mounted and terminated at appropriate connection points in both generator and transfer switch. For general infor-

mation regarding wire type, temperature rating, size range, and wire lug torque specifications, see ***Table 5-1*** and ***Table 5-2***. Always see NEC tables for specific requirements.

NOTE: For three-phase applications, use phase rotation meter to verify generator phase rotation matches rotation of the utility.

NOTE: For three-phase, delta configured alternators (voltage code J) and the second leg (N2) must be bonded to all second legs in the entire system.

See ***Alternator AC Lead Connections*** for more information.

Control Wiring Connections

The control wire customer connection block is where all of the control wiring is connected.

IMPORTANT NOTE: All wiring must comply with NEC, state, and local AHJ requirements. Control wiring shall be installed per the requirements of NEC Articles 300.3(C) and 725.46. If installing conductors with different voltage insulation ratings, a 600V rated electrical sleeve is provided and can be found in the manual bag.

See ***Figure 5-4***. Depending on the system type, control wiring includes the following. (Wire colors shown for illustration purposes only):

RTS Series Transfer Switch With T1 Fuse/ Connection

NOTE: Control wire customer connections typically use Class 1 Wiring Methods (verify with AHJ). Always follow the standards and methods appropriate to the circuits being wired.

NOTE: T1 is the 120 VAC power supply for the control panel battery charger. This circuit must be powered whether transfer switch is in utility or generator mode. If circuit loses power, control board will generate a warning (Battery Charge AC Fail).

NOTE: Observe maximum wire size for terminal strip connections shown in the unit wiring diagram.

(1) For battery charging, connect neutral in TB2 to neutral in transfer switch. See NOTE below for transfer switches without T1.

(2) Connect T1 in TB2 to T1 in transfer switch. This is 120 volt supply to the unit's battery charger (normal RTS transfer switch).

(3) (4) Connect N1, N2 sensing wires in TB2 to N1 and N2 in transfer switch. These two wires are utility sensing wires.

(5) (6) Connect 23 in TB3 to 23 in transfer switch. Connect 194 in TB3 to 194 in transfer switch. These are transfer switch control wires.

NOTE: RTS Series Transfer Switch Without T1 Fuse/ Connection: Use a 120 volt generator protected circuit from the panel board to power the battery charger circuit (dedicated 15/20 amp circuit).

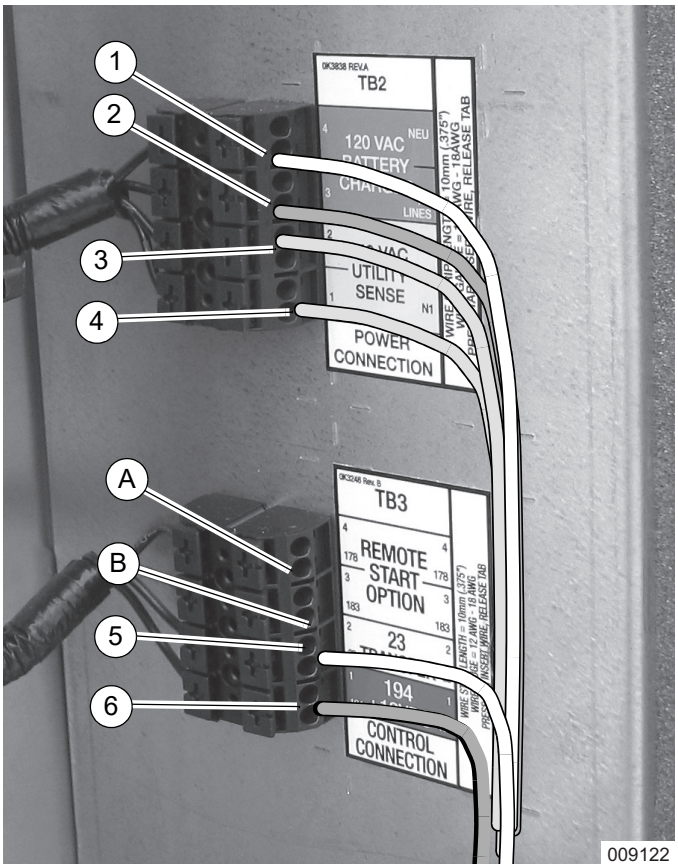

TB2 Terminal Block			
Terminal		**Function**	**Voltages**
1	Neutral	Neutral for T1 Battery Charger	Neutral
2	T1	Power for T1 Battery Charger	120 VAC
3	N2	Utility Sensing from Transfer Switch	208-277 VAC
4	N1	Utility Sensing from Transfer Switch	208-277 VAC
TB3 Terminal Block			
Terminal		**Function**	**Voltages**
A	178	Two Wire Start Control [GTS]	5 VDC
B	183	Two Wire Start Control [GTS]	5 VDC
5	23	Transfer Relay Control Wire	12-0 VDC
6	194	Power for Transfer Relay	12 VDC

Figure 5-4. Control Wiring Connections (Typical)

Two-Wire Start

To convert control panel to two-wire start transfer switch mode of operation, see dealer for panel conversion and connection of terminals 178 and 183 in TB3. Use a 120 volt generator protected circuit from the panel board to power the battery charger circuit (dedicated 15/20 amp circuit).

The generator controller will have to be programmed for two-wire start by an IASD.

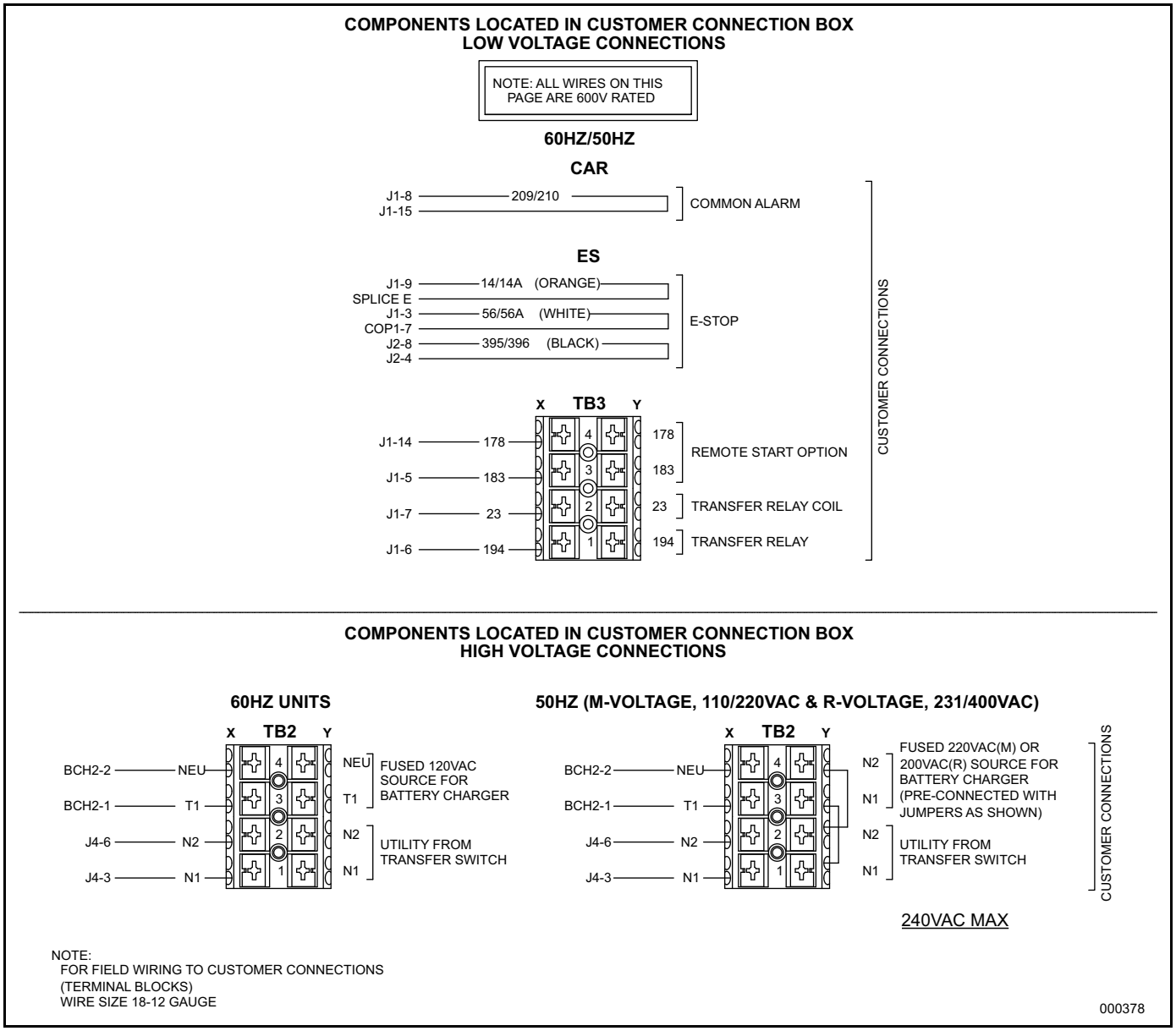

Figure 5-5. Typical Control Wiring Schematic

NOTE: The following table is provided for reference purposes only. See latest NEC, state, and local AHJ requirements for correct sizing.

Table 5-2. Control Wire Length/Size

Maximum Wire Length	Recommended Wire Size
1–115 ft (0.30–35 m)	No. 18 AWG
116–185 ft (36–56 m)	No. 16 AWG
186–295 ft (57–89 m)	No. 14 AWG
296–460 ft (90–140 m)	No. 12 AWG

Optional Accessory Power

- Accessory power for optional items (battery warmer and block heater) should come from a customer utility supply source (with appropriate sized breaker), which is also powered by emergency power during an outage.
- Optional user installed GFCI receptacles. Provides a place to plug in optional battery warmer and block heater.

NOTE: See ***Figure 5-2***. Remove knockout plug and route accessory wiring to customer supplied weatherproof junction box. Verify wires do not contact moving or vibrating engine parts, as abraded wires can result in electrical problems.

Installing Stub-Up Cover and Rear Panel

1. Install five screws with flat washers to secure stub-up cover.
2. Install four screws with nylon washers to fasten fascia over control panel.
3. Install rear panel. For best results, first engage right side of panel and then rotate left side inward toward enclosure. Alternately work left and right sides in until slots are aligned with screw holes on both sides. Install six screws with nylon washers and tighten until snug.

Transfer Switch Location

The location of the transfer switch is important. Consider the following:

- Locate transfer switch as close to emergency load as practical, to avoid interruptions of emergency power system due to natural disasters or equipment failures.
- Locate transfer switch in a clean, dry, well ventilated location, away from excessive heat. Allow adequate working space around transfer switch. See latest NEC, state, and local AHJ requirements for details.
- Install power and control wires as per NEC requirements. In a three-phase system, all power conduits from the generator must contain all three phases.
- Conduit, wire, circuit protective device sizes, insulation, etc. must conform to applicable local and national codes and regulations.

Battery

General Safety Precautions

⚠DANGER

Automatic start-up. Disconnect utility power and render unit inoperable before working on unit. Failure to do so will result in death or serious injury.

(000191)

⚠DANGER

Electrocution. Do not wear jewelry while working on this equipment. Doing so will result in death or serious injury.

(000188)

⚠WARNING

Accidental Start-up. Disconnect the negative battery cable, then the positive battery cable when working on unit. Failure to do so could result in death or serious injury.

(000130)

⚠WARNING

Explosion. Batteries emit explosive gases while charging. Keep fire and spark away. Wear protective gear when working with batteries. Failure to do so could result in death or serious injury.

(000137a)

⚠WARNING

Risk of burns. Batteries contain sulfuric acid and can cause severe chemical burns. Wear protective gear when working with batteries. Failure to do so could result in death or serious injury.

(000138a)

⚠WARNING

Explosion. Batteries emit explosive gases. Always connect positive battery cable first to avoid spark. Failure to do so could result in death or serious injury.

(000133)

⚠WARNING

Environmental Hazard. Always recycle batteries at an official recycling center in accordance with all local laws and regulations. Failure to do so could result in environmental damage, death, or serious injury. (000228)

Always recycle batteries in accordance with local laws and regulations. Contact your local solid waste collection site or recycling facility to obtain information on local recycling processes. For more information on battery recycling, visit the Battery Council International website at: ***http://batterycouncil.org***

- Stationary generators installed with automatic transfer switches will crank and start automatically when NORMAL, UTILITY source voltage is removed or is below an acceptable preset level. To prevent automatic startup and possible injury to personnel, do not connect battery cables until NORMAL source voltage at transfer switch is correct and system is ready to be placed into operation.
- When working on battery, only use tools with insulated handles. Do not rest tools or metal parts on top of battery.
- Discharge static electricity from the body before touching battery by first touching a grounded metal surface.
- Immediately wash down spilled electrolyte with an acid neutralizing agent. Use a solution of 1 lb (500 g) bicarbonate of soda to 1 gal (4 L) of water. Add the bicarbonate of soda solution until evidence of reaction (foaming) has ceased. Flush resulting liquid with water.

Battery Requirements

The ability to start the engine depends upon battery capacity, ambient temperatures, and coolant and oil temperatures. The engine/generator set data sheet lists minimum recommended battery capacity at various ambient temperatures. Recommended battery capacities are listed under cold cranking amps (CCA) at 0 °F (−18 °C). Battery capacities decrease as ambient temperatures decrease, so it is important to specify batteries with the appropriate CCA rating at a temperature no higher than the minimum ambient temperature for the application.

Battery Installation

Fill battery with correct electrolyte fluid as necessary and have battery fully charged before installing it.

Use appropriate tools when working with battery terminals. The use of terminal pullers, expansion pliers, and terminal cleaning brushes will greatly extend the life of the battery terminals.

1. See ***Figure 5-6***. Install rubber protective cover (A) over positive (+) battery terminal.
2. Grasp battery strap (B) and lift battery.
3. Set battery onto battery tray.
4. Tighten two screws with nylon washers to secure hold-down clamp to battery tray.
5. Remove rubber protective cover from positive (+) battery terminal.
6. Install positive battery cable (C) (red) on positive (+) battery terminal.
7. Install negative battery cable (D) (black) on negative (-) battery terminal.

NOTE: The unit is equipped with a internal battery charger. The internal battery charger is powered by the T1 wire. Verify power supply (T1 wire) has been safely disconnected before performing any work on the battery.

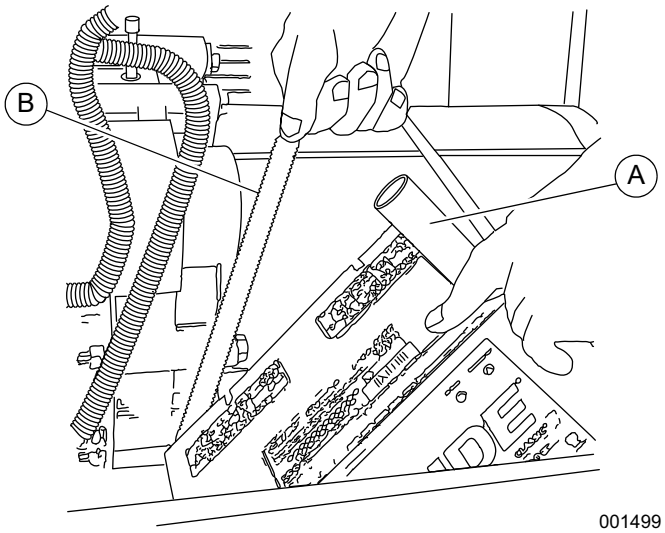

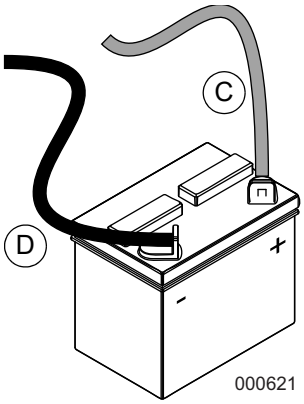

Figure 5-6. Battery Cable Connections

NOTE: At temperatures of 32 °F (0 °C) and below, it is recommended that a pad type battery heater be installed to aid in cold climate starting. This is available as a cold weather kit through an IASD.

Section 6: Control Panel Startup / Testing

Control Panel Interface

The control panel interface is located behind the door on the alternator end of the enclosure.

Using the AUTO/MANUAL/OFF Buttons

Button	Description of Operation
AUTO	Activates fully automatic system operation. Automatic operation allows unit to automatically start and exercise generator according to exercise timer settings (see ***Setting The Exercise Timer***.)
OFF	Shuts down engine and also prevents automatic operation and exercise of unit.
MANUAL	Cranks and starts generator. Transfer to standby power will not occur unless there is a utility failure.

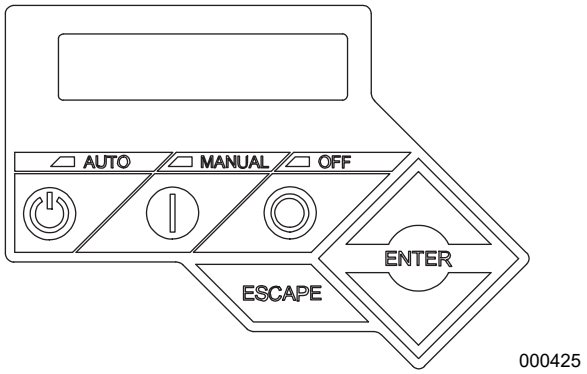

Figure 6-1. Generator Control Panel

Generator Setup

Controller will light up when battery power is applied to generator during the installation process. Generator still needs to be activated before it will automatically run in event of a power outage. See ***Activate Unit***.

Activate Unit

Display Reads: 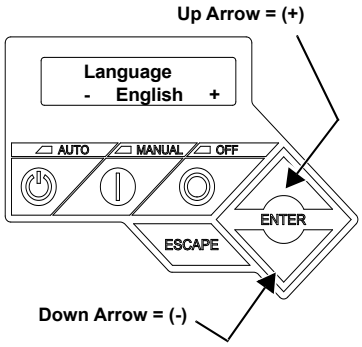 	**Generator Active** is displayed on the LCD screen when the unit is first powered up. After displaying firmware and hardware version codes, as well as other system information, the Install Wizard is launched, and the Language screen is displayed. Use UP ARROW or DOWN ARROW to scroll to desired language. Press ENTER.	If the wrong language is selected, it may be changed later using the Edit menu.
Display Reads: Activate me (ENT) or ESC to run in manual	Press ENTER.	Press ESCAPE to abort the activation sequence. NOT ACTIVATED is displayed and the generator will run in manual mode only. Disconnect and reconnect the negative battery cable to restart the activation routine. If power is removed after a successful activation, no data is lost, but the time and date must be updated.
Display Reads: To Activate go to www.activategen.com	Go to www.activategen.com or call 1-888-9ACTIVATE (922-8482, US & Canada only) if activation passcode is not available. If activation passcode is available, wait a few seconds for the next display.	
Display Reads: SN 1234567890 PASS CODE XXXXX	Use UP ARROW or DOWN ARROW to increment or decrement the digit to correspond to the first number of the passcode. Press ENTER. Repeat step to enter remaining digits.	Press ESCAPE to return to preceding digits if a correction becomes necessary. If attempts to enter the activation code are unsuccessful, check the number against the passcode given on activategen.com. If it is correct, contact 1-888-9ACTIVATE (922-8482, US & Canada only).

Setting The Exercise Timer

This generator is equipped with a configurable exercise timer. There are two settings for the exercise timer.

- **Day/Time:** Once set, generator will start and exercise for period defined, on day of week and at time of day specified. During this exercise period, unit runs for approximately 5 or 12 minutes, depending on model, (see ***Table 6-1***) and then shuts down.
- **Exercise frequency (how often exercise will take place):** It can be set to Weekly, Biweekly, or Monthly. If MONTHLY is selected, day of month must be selected from 1–28. Generator will exercise on selected day each month. Transfer of loads to generator output does not occur during exercise cycle unless utility power is lost.

NOTE: If installer tests generator prior to installation, press ENTER button to skip setting up exercise timer.

NOTE: Exercise feature will operate only when generator is placed in AUTO, and will not work unless this procedure is performed. Current date/time will need to be reset every time the 12 volt battery is disconnected and then reconnected, and/or when the fuse is removed.

Table 6-1. Exercise Parameters

Generator Size	22 kW	25 kW	27 kW	30 kW	32 kW	36 kW	38 kw	45 kW	48 kW	60 kW
Quiet-Test Speed (rpm)	1,400	1,800	1,400	1,800	1,500	1,800	1,500	1,800	1,400	1,800
Exercise Speed	1,800 or 3,600 rpm									
Exercise Frequency Options	Weekly, Bi-weekly, Monthly									
Exercise Duration	12 minutes									

Before Initial Startup

⚠CAUTION

Engine damage. Verify proper type and quantity of engine oil prior to starting engine. Failure to do so could result in engine damage.

(000135)

NOTE: This unit comes factory-filled with 5W-20 engine oil. Replace engine oil with 5W-30 engine oil during first oil change due at 30 hours break-in.

Install Wizard

See ***Figure 6-2***. Upon initial startup, Install Wizard immediately appears. It allows user to input generator settings.

The Install Wizard starts every time AC and DC power are removed and reapplied to generator.

Interconnect System Self Test Feature

This controller goes through a system self test at startup, which checks for utility (AC) voltage on DC circuits. This check prevents damage if installer incorrectly connects AC utility power sense wires into DC terminal block. Controller will display a warning message and lock out the generator if utility voltage is detected, preventing damage to controller. Power to controller must be removed to clear this warning.

Utility voltage must be turned on and present at the N1 and N2 terminals inside generator control panel for this test to be performed and pass.

NOTE: All appropriate panels must be in place during any operation of the generator. This includes operation by a servicing technician, while conducting troubleshooting procedures.

Before starting, complete the following:

1. Verify generator is OFF.
2. Set generator MLCB (generator disconnect) to OFF (OPEN).
3. Turn off all circuit breakers/electrical loads to be supplied by generator.
4. Verify both auxiliary shutdown switches are ON (I).
5. Check engine crankcase oil level and, if necessary, fill to oil dipstick FULL mark with recommended oil. Do not fill above FULL mark.
6. Inspect fuel supply. Gaseous fuel lines must have been correctly purged and leak tested in accordance with applicable fuel-gas codes. All fuel shut-off valves in the fuel supply lines must be open.

During initial startup only, generator may exceed normal number of start attempts and experience an “OVER-CRANK” fault. This is due to accumulated air in the fuel system during installation. Reset control board by pressing OFF button and ENTER button, and restart up to two more times if necessary. If unit fails to start, contact an IASD for assistance.

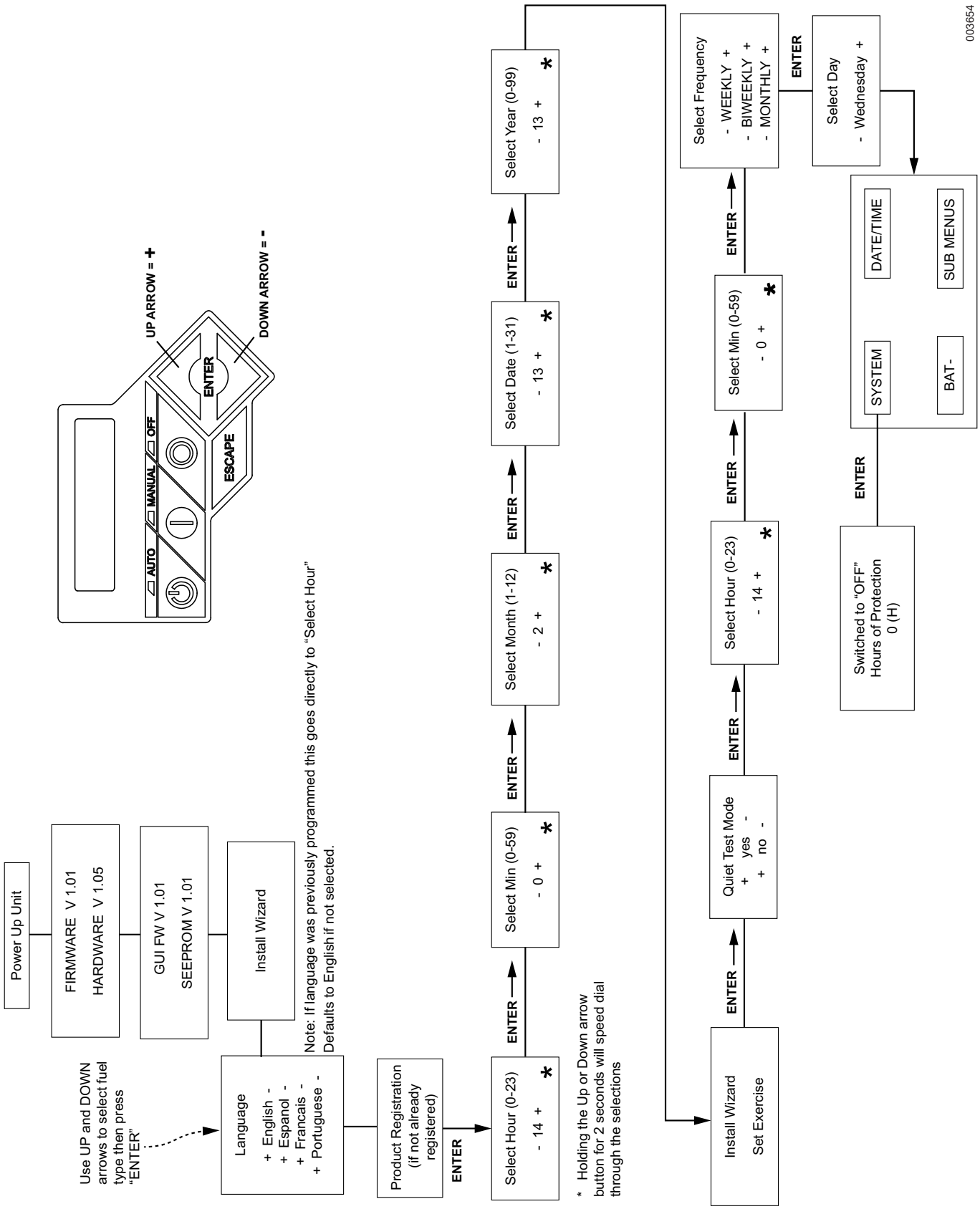

Figure 6-2. Install Wizard Menu Map

Checking Manual Transfer Switch Operation

DANGER

Electrocution. High voltage is present at transfer switch and terminals. Contact with live terminals will result in death or serious injury.

(000129)

See Manual Transfer Operation section of owner's manual for procedures.

Operational Checks

NOTE: The following procedures require special tools and skills. Contact a Generac dealer or an IASD to perform these tasks.

Electrical Checks

DANGER

Electrocution. High voltage is present at transfer switch and terminals. Contact with live terminals will result in death or serious injury.

(000129)

WARNING

Electric shock. Phase rotation must be compatible. Incompatible phase rotation could result in death, serious injury, or equipment damage.

(000226b)

NOTE: Verify all power and control wiring is correctly terminated in the generator and corresponding location in transfer switch. For three-phase applications, verify generator phase rotation matches utility phase rotation L1-L2-L3 or L3-L2-L1. Validate phase rotation L1-L2-L3 or L3-L2-L1 with an phase rotation tester (if three-phase).

NOTE: To correct phase rotation, interchange any two leads.

Proceed as follows to complete electrical checks:

1. Verify generator is in OFF mode. Red LED above OFF on control panel illuminates to verify system is OFF.
2. Verify generator MLCB (generator disconnect) is OFF (OPEN).
3. Turn off all circuit breakers/electrical loads to be supplied by generator.
4. Turn on utility power supply to transfer switch using the means provided (such as a utility MCLB).
5. Use an accurate AC voltmeter to verify utility power source voltage across transfer switch terminals N1 and N2 (and N3 if three-phase). Normal line-to-line voltage should be equivalent to rated unit voltage. Validate (if three-phase) phase rotation L1-L2-L3 or L3-L2-L1 with a phase rotation tester.
6. Verify utility power source voltage across terminals N1 and N2 (and N3 if three-phase) and transfer switch neutral lug.
7. Turn off utility power supply to transfer switch when utility supply voltage is compatible with transfer switch and load circuit ratings.
8. Verify both auxiliary shutdown switches are ON (I).
9. Press MANUAL on control panel keypad to crank and start engine.
10. Allow engine to warm up for approximately five minutes. Set generator MLCB (generator disconnect) to ON (CLOSED).
11. Connect an accurate AC voltmeter and a frequency meter across transfer switch terminal lugs E1 and E2 (and E3 if three-phase).
12. Successively connect the AC voltmeter test leads across terminal lugs E1, E2, (and E3 if three-phase) and neutral. Voltage reading in each case should match utility voltage reading. If system is three-phase, verify generator phase rotation matches utility phase rotation.
13. Set generator MLCB (generator disconnect) to OFF (OPEN).
14. Press OFF on control panel to shut engine down.

IMPORTANT NOTE: Do not proceed unless generator AC voltage and frequency are correct and within stated limits.

Testing Generator Under Load

DANGER

Electrocution. Do not manually transfer under load. Disconnect transfer switch from all power sources prior to manual transfer. Failure to do so will result in death or serious injury, and equipment damage.

(000132)

Proceed as follows to test generator with electrical loads applied:

1. Verify generator is in OFF mode. Red LED above OFF on control panel illuminates to verify system is OFF.
2. Turn off all circuit breakers/electrical loads to be supplied by generator.
3. Turn off utility power supply to transfer switch, using the means provided (such as a utility MLCB).
4. Manually set transfer switch to STANDBY, i.e., load terminals connected to generator's E1 and E2 (and E3 if three-phase) terminals. Transfer switch operating lever should be down in standby position.
5. Verify both auxiliary shutdown switches are ON (I).

6. Press MANUAL on control panel. Engine should crank and start immediately.
7. Allow engine to warm up for approximately five minutes.
8. Set generator MLCB (generator disconnect) to ON (CLOSED).
9. Turn on circuit breaker/electrical loads to be supplied by generator. Loads are now powered by standby generator.
10. Connect a calibrated AC voltmeter and a frequency meter across terminal lugs E1 and E2 (and E3 if three-phase). Voltage should be approximately unit rated voltage.
11. Allow generator to run at full rated load for 20–30 minutes. Listen for unusual noises, vibration, or other indications of abnormal operation. Inspect for oil leaks, evidence of overheating, etc.
12. Turn off electrical loads when utility supply voltage is compatible with transfer switch and load circuit ratings.
13. Set generator MLCB (generator disconnect) to OFF (OPEN).
14. Allow engine to run at no-load for 2–5 minutes.
15. Press OFF on control panel to shut engine down.

Testing Auxiliary Shutdown Switch Operation

⚠CAUTION

Equipment Damage. The auxiliary shutdown switch is not to be used to power down the unit under normal operating circumstances. Doing so will result in equipment damage. (000399)

Test auxiliary shutdown switches to verify correct operation.

1. See ***Figure 6-3***. Verify auxiliary shutdown switches (A, B) are ON (I).

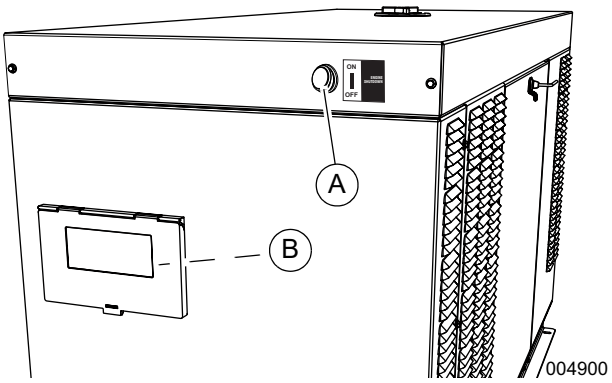

Figure 6-3. Auxiliary Shutdown Switch Locations

2. Press MANUAL on control panel to start engine.
3. With engine running, set one auxiliary shutdown switch to OFF (O). Engine will shut down immediately.
   - If engine stops, set auxiliary shutdown switch to ON (I), clear alarm on controller, and restart engine to verify generator is operating normally. After verifying normal operation of first auxiliary shutdown switch, verify operation of second auxiliary shutdown switch.
   - If engine does not stop, auxiliary shutdown switch is not functioning correctly. Stop generator through control panel, and inspect wiring installation. Contact Generac Technical Support if problem cannot be identified or if assistance is needed.

Auxiliary shutdown switches are not intended to be a primary means to shut down generator under normal operating conditions. Accidental activation of an auxiliary shutdown switch will prevent generator from operating during a power outage.

Checking Automatic Operation

Proceed as follows to check system for correct automatic operation:

1. Verify generator is in OFF mode. Red LED above OFF on control panel illuminates to verify system is OFF.
2. Install front cover over transfer switch.
3. Turn on utility power supply to transfer switch, using the means provided (such as a utility MLCB).

NOTE: Transfer switch will transfer to utility position.

4. Set generator MLCB (generator disconnect) to ON (CLOSED).
5. Verify both auxiliary shutdown switches are ON (I).
6. Press AUTO on control panel. System is now ready for automatic operation.
7. Turn off utility power supply to transfer switch.

With generator ready for automatic operation, engine will crank and start when utility source power is turned OFF after a 10 second delay (factory default setting). After starting, transfer switch connects load circuits to standby side. Allow system to operate through entire automatic sequence of operation.

With generator running and loads powered by generator AC output, turn ON utility power supply to transfer switch. System transfers to UTILITY, and then runs through the cool down cycle and shuts down.

Installation Summary

1. Verify installation has been performed correctly as outlined by the manufacturer and that it meets all applicable laws and codes.
2. Test and verify correct operation of the system as outlined in the appropriate installation and owner's manuals.
3. Educate end-user on correct operation, maintenance, and service call procedures.

Shutting Generator Down While Under Load or During a Utility Outage

DANGER

Automatic start-up. Disconnect utility power and render unit inoperable before working on unit. Failure to do so will result in death or serious injury.

(000191)

IMPORTANT NOTE: If user finds it necessary to turn generator OFF during prolonged utility outages to conserve fuel or perform maintenance, alert them to these important steps:

To turn generator OFF (while running in AUTO and online):

1. Set utility MLCB to OFF (OPEN).
2. Set generator MLCB (generator disconnect) to OFF (OPEN).
3. Allow unit to run for a few minutes to cool, and then press OFF on control panel. Red LED illuminates to verify system is OFF.

To turn generator back ON:

1. Press AUTO on control panel. Allow unit to start and warm up for a few minutes.
2. Set generator MLCB (generator disconnect) to ON (CLOSED).

System is now operating in AUTO. The utility MLCB can be set to ON (CLOSED), but to shut unit down, this complete process must be repeated.

This page intentionally left blank.

Section 7: Installation Checklists

Safety Checklist

NOTE: See ***Safety Rules & General Information*** for more information.

- ☐ Are manuals, wiring diagrams, and other documentation readily available?
- ☐ Is there any evidence of freight damage?
- ☐ Does the enclosure have scratches or damage to painted surfaces (which would indicate lifting without a spreader bar)?
- ☐ Are all guards, covers, insulation blankets, and other protective devices in place?
- ☐ Are any parts or components worn, damaged, or missing?
- ☐ Is generator correctly grounded?
- ☐ Is a fire extinguisher kept near generator?
- ☐ Is there any evidence of oil or coolant leaks?
- ☐ Are any combustible materials left in generator compartment?
- ☐ Is area surrounding generator clean and free of debris?
- ☐ Do these parameters meet all applicable codes and local jurisdiction?

Installation Planning Checklist

NOTE: See ***Installation Planning*** for more information.

- ☐ Is generator readily accessible for maintenance, repair, and firefighting purposes?
- ☐ Is installation site clean, dry, and provided with adequate drainage?
- ☐ Is there minimum clearance around the generator to facilitate repair or replacement of major components?
- ☐ Have adequate provisions been made for installation of the fuel supply?
- ☐ Do these parameters meet all applicable codes and local jurisdiction?

Foundations and Mounting Checklist

NOTE: See ***Site Selection and Preparation*** for more information.

- ☐ Is generator installed on a concrete pad capable of supporting its weight and accessories?
- ☐ Is generator securely fastened to concrete pad using suitable grade, size, and style fasteners?
- ☐ Is concrete pad seated on a prepared solid subsurface using appropriate reinforcing bar or expanded wire mesh?
- ☐ Does concrete pad extend beyond the frame rails at least 3 in (7.62 cm) on all sides?
- ☐ Is concrete pad flat and level to within 0.5 in (13 mm)?
- ☐ Are plugs installed in the tie-down holes of frame rail?
- ☐ If installed on a roof or combustible floor, is generator seated on a layer of sheet metal and non-combustible insulation? Do the sheet metal and insulation extend beyond generator base at least 12 in (300 mm) on all sides?
- ☐ Is base frame stub-up cover plate installed?
- ☐ Do all fuel, coolant, exhaust, and electrical lines have flexible sections where they connect to generator?
- ☐ Is all piping correctly supported and secured?
- ☐ Do these parameters meet all applicable codes and local jurisdiction?

Ventilation System Checklist

NOTE: See ***Site Selection and Preparation*** for more information.

- ☐ Is there sufficient air flow for cooling and ventilation?
- ☐ Are all bushes, shrubs, and other vegetation a minimum of 3 ft (1 m) away?
- ☐ Does the air inlet face the direction of prevailing winds?
- ☐ Is system piping correctly sized? Have all gas loads been taken into consideration?
- ☐ Is system correctly protected from freeze up and corrosion?
- ☐ Have standby equipment heaters been specified?
- ☐ Have system drain valves and air eliminators been installed?
- ☐ Does air outlet face noise sensitive areas without noise attenuating devices?
- ☐ Does installation appear to have the necessary accessories to promote fast, reliable starting and operation in adverse weather conditions (such as engine block heaters, battery warmers, etc.)?
- ☐ Do these parameters meet all applicable codes and local jurisdiction?

Exhaust System Checklist

NOTE: See ***Gaseous Fuel Systems*** for more information.

- ☐ Are exhaust discharges directed away from combustible surfaces and inhabited areas?
- ☐ Is exhaust piping kept clear of fuel supply, fuel lines, etc.?
- ☐ Is off-engine exhaust piping covered with high temperature insulation blankets where necessary?
- ☐ Do these parameters meet all applicable codes and local jurisdiction?

Gaseous Fuel System Checklist

NOTE: See ***Gaseous Fuel Systems*** for more information.

- ☐ Are fuel supply lines correctly sized and installed? Were fuel supply lines purged and leak tested?
- ☐ Are sediment traps installed to remove water and condensate from the fuel flow?
- ☐ Is fuel pressure regulator correctly sized?
- ☐ Is a fuel pressure test port installed before fuel shutoff solenoids at inlet to the unit mounted fuel regulator?
- ☐ Does generator have a dedicated fuel line which is not shared with any other appliances?
- ☐ Is fuel regulator sized to have a fuel flow delivery rating (CFH) at least 10% greater than the FULL rated kW fuel consumption requirement of the generator?
- ☐ Is fuel pressure regulator approved for a mechanized engine application?
- ☐ Does fuel pressure regulator have an accuracy rating of 1% or less, and/or have a maximum allowable fuel pressure drop of 1–2 in water column (0.25–0.50 kPa) under all operating conditions; that is, static, cranking, running at no load, and running at full load (as measured at the primary fuel pressure regulator)?
- ☐ Does fuel pressure regulator have a spring rating appropriate for the required fuel pressure as listed in the unit specification sheet?
- ☐ Does fuel system use black iron piping or other approved fuel line?
- ☐ Is fuel line rigidly mounted and protected against vibration?
- ☐ Is a length of flexible fuel line installed between generator connection point and rigid fuel supply piping? Is the flexible fuel line straight without bends, twists, or kinks?
- ☐ Is fuel piping correctly sized to maintain required fuel supply pressure and volume under varying load conditions?
- ☐ Was an approved pipe sealant or joint compound used on all threaded fittings?
- ☐ Is a fuel shutoff valve installed near unit? Was correct operation of fuel shutoff valve verified?
- ☐ Was Final Operating Test performed to verify system operates correctly in all modes of operation?
- ☐ Is there any evidence of leakage at any hoses, clamps, or fittings?
- ☐ Do these parameters meet all applicable codes and local jurisdiction?

Electrical System Checklist

NOTE: See ***Electrical System*** for more information.

- ☐ Is all wiring correctly sized for load and length of run?
- ☐ Is all wiring correctly routed?
- ☐ Is all wiring correctly connected?
- ☐ Are wire lugs fastened to bus bars using appropriate hardware? Is hardware correctly tightened to specified torque?
- ☐ Are all other terminals correctly tightened using the specified torque?
- ☐ Are batteries correctly sized?
- ☐ Are batteries correctly installed?
- ☐ Are battery fluid levels correct?
- ☐ Are battery cables and connections clean and free of corrosion?
- ☐ Are battery cables correctly connected? Are terminal lugs correctly tightened?
- ☐ Is battery condition and state of charge acceptable?
- ☐ Is area housing storage battery correctly ventilated?
- ☐ Are batteries located near a source of flame or spark?
- ☐ Are AC wire sizes and connections correct?
- ☐ Are DC and communication wire sizes and connections correct?
- ☐ Are block heaters, battery charger, etc. correctly matched with utility supply voltage?
- ☐ Are battery charger and block heater correctly connected?
- ☐ Are remote start Wires 178 & 183 pulled and connected inside lower control panel of generator and inside transfer switch?
- ☐ Is generator set to OFF?
- ☐ Is block heater operational?
- ☐ Is battery charger operational?
- ☐ Are all AC electrical connections tight at the circuit breaker and transfer switch?
- ☐ Are two auxiliary shutdown switches ON (I)?
- ☐ Are all electrical connections (wiring, wire ties, clamps, terminal ends, connectors) on generator tight?
- ☐ Are all electrical plugs throughout generator seated correctly and fully inserted into their receptacles?
- ☐ Is voltage and phase rotation correct at the transfer switch?
- ☐ Is manual operation of transfer switch smooth and non-binding?
- ☐ Do these parameters meet all applicable codes and local jurisdiction?

Oil Maintainer System Checklist

(If Equipped)

NOTE: See ***Lube Oil Maintainer System*** for more information.

- ☐ Has oil maintainer oil supply tank been filled with the recommended engine oil and tested?
- ☐ Has oil maintainer been tested to correct level?

This page intentionally left blank.

Section 8: Lube Oil Maintainer System

Lube Oil Maintainer System

Description

The 36 kW, 45 kW, and 60 kW models are equipped with a lube oil maintainer system. The lube oil maintainer system is factory-installed and factory-calibrated to the correct engine-running crankcase oil level. The lube oil maintainer system keeps engine lubricating oil full by automatically adding clean oil from oil supply tank as needed.

NOTE: Oil reservoir is empty when shipped from factory. Fill with clean engine oil to activate system.

Oil reservoir capacity: 2.5 gal (9.46 L)

See ***Figure 8-1***. The green bar (B) observed through the viewing lens (A) shows normal oil level operating range (C) of lube oil maintainer regulator during engine running operation. When oil level is within green bar, the internal float holds the inlet valve closed to keep crankcase oil at current level.

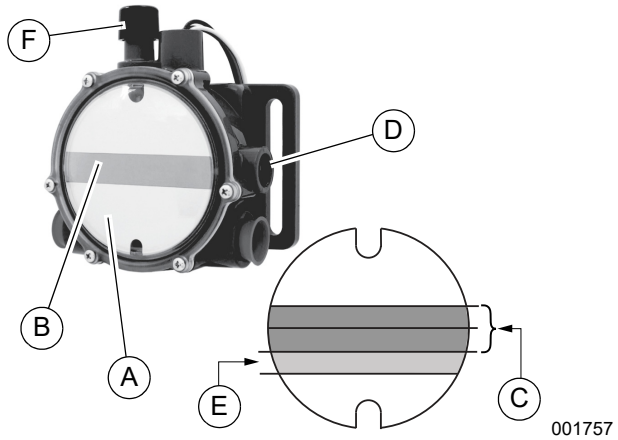

Figure 8-1. Lube Oil Maintainer Regulator

NOTE: Wires connected to viewing lens are not used in this application and can be disregarded.

As engine uses oil, float drops to open the inlet valve. Clean oil is drawn through the oil inlet screen (D) and into crankcase, replenishing engine oil to full mark indicated on oil dipstick. The float then rises with crankcase oil level until it reaches a point where inlet valve closes.

When oil level as observed through the viewing lens is low (E) and below normal operating range green bar, it is an indication the oil supply tank is low or oil inlet screen is clogged.

Test operation of the float and switch by pressing the test button (F).

NOTE: It is normal for oil level to be above normal operating range green bar when engine is not running.

NOTE: Close oil shutoff valve when changing engine oil to avoid draining clean oil in the oil supply tank with the crankcase oil. See ***Oil Shutoff Valve***.

Fill Oil Supply Tank

1. See ***Figure 8-2***. Rotate plastic cover (G) counter-clockwise and remove from top of enclosure.

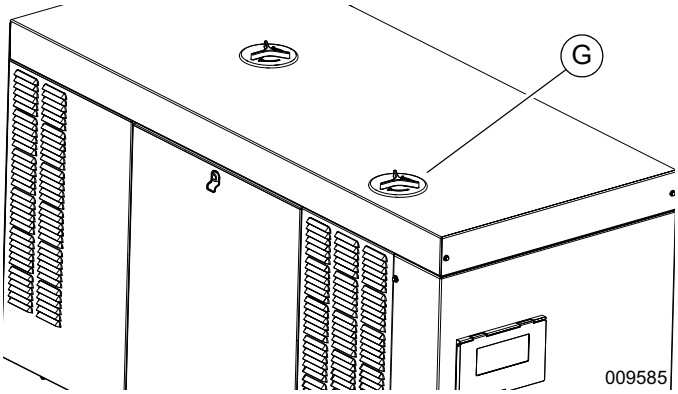

Figure 8-2. Access Oil Supply Tank

2. Remove oil fill cap at top of oil supply tank.
3. Add clean engine oil to oil supply tank (2.5 gal [9.5 L] capacity).
4. Install oil fill cap at top of oil supply tank.
5. Install plastic cover at top of enclosure and rotate clockwise until tight.

Test Functionality

See ***Figure 8-1***. Momentarily press test button (F) to verify float is operating correctly.

IMPORTANT NOTE: Do not hold test button down for a prolonged period of time, or crankcase can be over filled. Overfilling crankcase can result in engine damage.

Oil Shutoff Valve

See ***Figure 8-3***. Close oil shutoff valve when draining engine crankcase oil to avoid draining clean oil from supply tank.

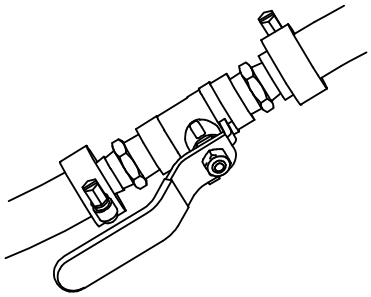

Figure 8-3. Oil Shutoff Valve (Shown in Open Position)

Open oil shutoff valve after filling crankcase with clean oil to allow operation of lube oil maintainer system.

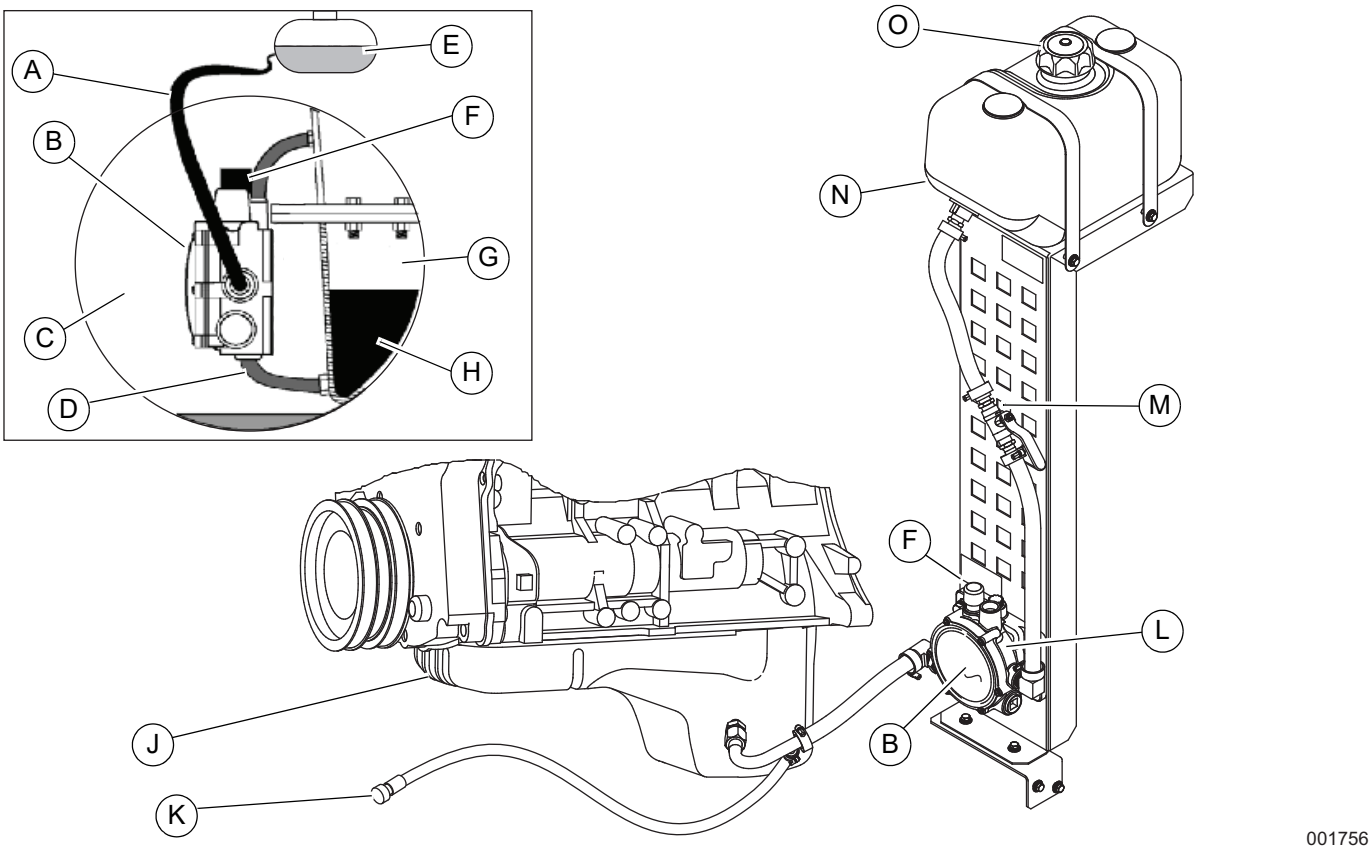

Figure 8-4. Lube Oil Maintainer Assembly and Function Diagram

A	Oil inlet hose	F	Test button	L	Regulator
B	Regulator viewing lens	G	Running engine crankcase	M	Oil shutoff valve
C	Center of green bar	H	Oil level	N	Oil supply tank
D	Crankcase hose	J	Engine crankcase oil pan	O	Oil fill cap
E	Oil supply tank	K	Oil drain hose	—	—

Section 9: Troubleshooting/Quick Reference Guide

Troubleshooting

Problem	Cause	Correction
Engine will not crank	Blown fuse.	Correct short circuit condition by replacing 7.5 amp fuse in generator control panel.
	Loose, corroded, or faulty battery cables.	Tighten, clean, or replace as necessary. Contact an IASD for assistance.
	Faulty starter contact.	
	Faulty starter motor.	
	Discharged battery.	Charge or replace battery.
Engine cranks but will not start	No fuel.	Verify fuel source / turn on fuel shutoff valve.
	Faulty fuel solenoid (FS).	Contact an IASD for assistance.
	Faulty spark plug(s).	Clean, inspect spark plug gap, or replace spark plug(s) if necessary.
	Valve lash out of adjustment.	Reset valve lash.
Engine starts hard and runs rough	Air cleaner plugged or damaged.	Check / replace air cleaner.
	Faulty spark plug(s).	Clean, inspect spark plug gap, or replace spark plug(s) if necessary.
	Incorrect fuel pressure.	Verify fuel pressure to regulator is 5–14 in water column (1.24–3.48 kPa) for NG or 11–14 in water column (2.74–3.48 kPa) for LP gas.
	Unit fuel regulator not converted for correct fuel source and/or not programmed for correct fuel source.	Convert and program unit for correct fuel source.
Unit is set to OFF, but engine continues to run	Controller wired incorrectly.	Contact an IASD for assistance.
	Faulty control board.	
No AC output from generator	Generator MLCB (generator disconnect) is OFF (OPEN).	Set generator MLCB (generator disconnect) to ON (CLOSED).
	Generator internal failure.	Contact an IASD for assistance.
No transfer to standby after utility source failure	Generator MLCB (generator disconnect) is OFF (OPEN).	Set generator MLCB (generator disconnect) to ON (CLOSED).
	Faulty transfer switch coil.	Contact an IASD for assistance.
	Faulty transfer relay.	
	Transfer relay circuit open.	
	Faulty control logic board.	
Unit consumes large amounts of oil	Excessive engine oil.	Adjust oil to correct level.
	Faulty engine breather.	Contact an IASD for assistance.
	Incorrect type or viscosity of oil.	See engine oil recommendations in owner's manual.
	Damaged gasket, seal, or hose.	Inspect for oil leaks.

Quick Reference Guide

To clear an active alarm, press the ENTER button twice and then press AUTO. If the alarm reoccurs, contact an IASD.

Active Alarm	LED	Problem	Action	Solution
NONE	GREEN	Unit running in AUTO but no power in house.	Check generator MLCB (generator disconnect).	Check generator MLCB (generator disconnect). If generator MLCB (generator disconnect) is ON, contact an IASD for assistance.
HIGH TEMPERATURE	RED	Unit shuts down during operation.	Check LED's / Screen for alarms.	Inspect ventilation around generator, intake, exhaust, and rear of generator. If no obstruction, contact an IASD for assistance.
OVERLOAD REMOVE LOAD	RED	Unit shuts down during operation.	Check LED's / Screen for alarms.	Clear alarm and remove household loads from generator. Put back in AUTO and restart.
RPM SENSE LOSS	RED	Unit was running and shuts down, attempts to restart.	Check LED's / Screen for alarms.	Clear alarm and remove household loads from generator. Put back in AUTO and restart. If generator does not start, contact an IASD for assistance.
NOT ACTIVATED	NONE	Unit will not start in AUTO with utility loss.	Verify if screen says unit not activated.	See ***Checking Manual Transfer Switch Operation***.
NONE	GREEN	Unit will not start in AUTO with utility loss.	Check screen for start delay countdown.	If startup delay is greater than expected, contact an IASD for assistance.
LOW OIL PRESSURE	RED	Unit will not start in AUTO with utility loss.	Check LED's / Screen for alarms.	Check oil level / add oil per owners manual. If oil level is correct, contact an IASD.
RPM SENSE LOSS	RED	Unit will not start in AUTO with utility loss.	Check LED's / Screen for alarms.	Clear alarm. Check battery option in control menu. If it states battery is GOOD, contact an IASD. If it states CHECK BATTERY, replace battery.
OVERCRANK	RED	Unit will not start in AUTO with utility loss.	Check LED's / Screen for alarms.	Verify fuel line shutoff valve is ON. Clear alarm. Attempt to start unit in MANUAL. If it does not start or starts and runs rough, contact an IASD for assistance.
LOW VOLTS REMOVE LOAD	RED	Unit will not start in AUTO with utility loss.	Check LED's / Screen for alarms.	Clear alarm and remove household loads from generator. Put back in AUTO and restart.
FUSE PROBLEM	RED	Unit will not start in AUTO with utility loss.	Check LED's / Screen for alarms.	Inspect 7.5 amp fuse. If it is bad, replace with an ATO 7.5 amp fuse. If fuse is good, contact an IASD for assistance.
OVERSPEED	RED	Unit will not start in AUTO with utility loss.	Check LED's / Screen for alarms.	Contact an IASD for assistance.
UNDERVOLTAGE	RED	Unit will not start in AUTO with utility loss.	Check LED's / Screen for alarms.	Contact an IASD for assistance.
UNDERSPEED	RED	Unit will not start in AUTO with utility loss.	Check LED's / Screen for alarms.	Contact an IASD for assistance.
STEPPER OVERCURRENT	RED	Unit will not start in AUTO with utility loss.	Check LED's / Screen for alarms.	Contact an IASD for assistance.
WIRING ERROR	RED	Unit will not start in AUTO with utility loss.	Check LED's / Screen for alarms.	Contact an IASD for assistance.

Active Alarm	LED	Problem	Action	Solution
OVERVOLTAGE	RED	Unit will not start in AUTO with utility loss.	Check LED's / Screen for alarms.	Contact an IASD for assistance.
LOW BATTERY	YELLOW	Yellow LED illuminated in any state.	See screen for additional information.	Clear alarm. Check battery option in control menu. If it states battery is GOOD, contact an IASD. If it states CHECK BATTERY, replace battery.
BATTERY PROBLEM	YELLOW	Yellow LED illuminated in any state.	See screen for additional information.	Contact an IASD for assistance.
CHARGER WARNING	YELLOW	Yellow LED illuminated in any state.	See screen for additional information.	Contact an IASD for assistance.
SERVICE A	YELLOW	Yellow LED illuminated in any state.	See screen for additional information.	Perform SERVICE A maintenance. Press ENTER to clear.
SERVICE B	YELLOW	Yellow LED illuminated in any state.	See screen for additional information.	Perform SERVICE B maintenance. Press ENTER to clear.
INSPECT BATTERY	YELLOW	Yellow LED illuminated in any state.	See screen for additional information.	Inspect battery. Press ENTER to clear.
CHARGER MISSING AC	YELLOW	AC input to battery charger circuit missing for greater than 5 minutes during charging cycle.	Inspect connections at transfer switch, fuses in transfer switch.	Contact an IASD for assistance.
AUXILIARY SHUTDOWN	RED	Unit either shuts down or does not start when one or both switches are OFF (O).	See screen for additional information.	Clear alarm and verify both auxiliary shutdown switches are ON (I). See ***Testing Auxiliary Shutdown Switch Operation*** for more information.

This page intentionally left blank.

Section 10: Accessories

Performance enhancing accessories are available for liquid-cooled generators.

Item	Description	Part Number
	Cold Weather Kit Recommended in areas where temperatures fall below 32 °F (0 °C).	G006175-0—25 & 30 kW G005630-1—36, 45, & 60 kW
	Extreme Cold Weather Kit Engine block heater. Used in conjunction with the appropriate Cold Weather Kit. ***NOTE: Engine oil must be replaced with synthetic oil.***	G006174-0—25 & 30 kW G005616-0—36, 45, & 60 kW
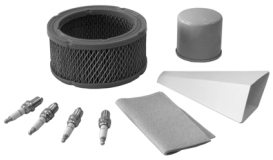	**Scheduled Maintenance Kit** Includes all pieces necessary to perform maintenance on the generator along with oil recommendations.	G006176-0—25 & 30 kW G006172-0—36 & 45 kW G006171-0—60 kW
Mobile Link	**Mobile Link®** Provides a personalized web portal displaying generator status, maintenance schedule, event history, and much more.	G006463-4
	Touch-Up Paint Kit If the generator enclosure is scratched or damaged, it is important to touch up the paint to protect it from future corrosion. The touch-up paint kit includes the necessary paint to correctly maintain or touch up a generator enclosure.	G005703-0—Bisque G005704-0—Gray
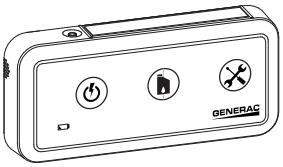	**Wireless Local Monitor** Completely wireless and battery powered, the Wireless Local Monitor provides owners with instant status without ever leaving the house. Status lights (red, yellow, and green) alert owners when the generator needs attention. Magnetic backing permits refrigerator mounting and gives a 600 ft (183 m) line of sight communication.	G006664-0
	Extended Warranty Coverage	
	Liquid Cooled Generator Pad Reinforced composite pad for: 22–30 kW Protector gaseous series 32–60 kW Protector gaseous series	 10000044173 10000005771
	Ultrasonic Cleaning Solution 1 gal (3.8 L) of ultra concentrated cleaning solution for metal and plastic surfaces. Makes 6 gal (22.7 L) of cleaning solution.	A0000018981

	All Surface Protectant All surface protectant for vinyl, rubber, and plastics. Creates a barrier to seal and protect surfaces from water and UV rays while renewing the look of the surface.	A0000019001

NOTE: Contact an IASD or visit ***www.generac.com*** for additional information on accessories and extended warranties.

Section 11: Installation Drawings

0K8420-D 25/30 kW (1.5 L) Page 1 of 2

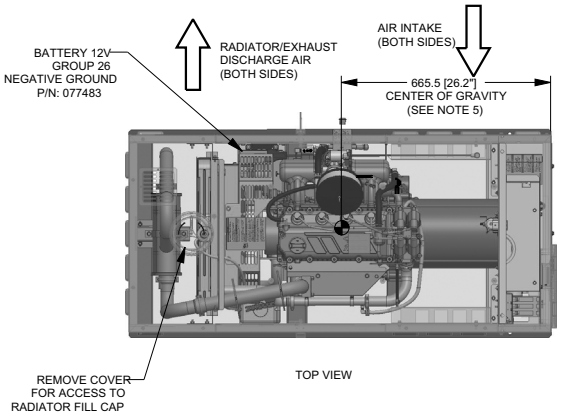

SERVICE ITEM	1.5L
OIL FILL CAP	EITHER DOOR
OIL DIP STICK	RIGHT DOOR
OIL FILTER	RIGHT DOOR
OIL DRAIN HOSE	RIGHT DOOR
RADIATOR DRAIN HOSE	RIGHT DOOR
AIR CLEANER ELEMENT	RIGHT DOOR
SPARK PLUGS	RIGHT DOOR
MUFFLER	SEE NOTE 12
FAN BELT	EITHER DOOR
BATTERY	RIGHT DOOR

REFERENCE OWNERS MANUAL
FOR PERIODIC
REPLACEMENT PART LISTINGS.

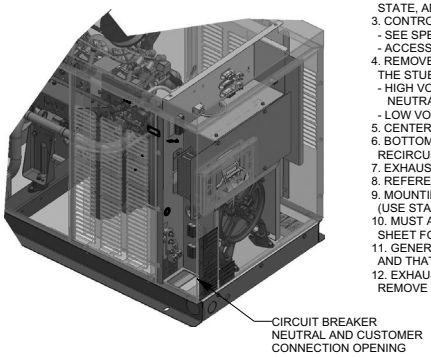

NOTES:

1. MINIMUM CONCRETE PAD SIZE: 929.6 (36.6") X 1732.3 (68.2") LONG.
   REFERENCE INSTALLATION GUIDE SUPPLIED WITH UNIT FOR CONCRETE PAD GUIDELINES.
2. ALLOW SUFFICIENT ROOM ON ALL SIDES OF THE GENERATOR FOR MAINTENANCE
   AND SERVICING. THIS UNIT MUST BE INSTALLED IN ACCORDANCE WITH CURRENT
   APPLICABLE NFPA 37 AND NFPA 70 STANDARDS AS WELL AS ANY OTHER FEDERAL,
   STATE, AND LOCAL CODES.
3. CONTROL PANEL / CIRCUIT BREAKER INFORMATION:
   - SEE SPECIFICATION SHEET OR OWNERS MANUAL
   - ACCESSIBLE THROUGH CUSTOMER ACCESS ASSEMBLY DOOR ON REAR OF GENERATOR.
4. REMOVE THE REAR ENCLOSURE COVER PANEL TO ACCESS
   THE STUB-UP AREAS AS FOLLOWS:
   - HIGH VOLTAGE CONNECTION INCLUDING AC LOAD LEAD CONDUIT CONNECTION
     NEUTRAL CONNECTION, BATTERY CHARGER 120 VOLT AC (0.5 AMP MAX) CONNECTION.
   - LOW VOLTAGE CONNECTION INCLUDING TRANSFER SWITCH CONTROL WIRES.
5. CENTER OF GRAVITY AND WEIGHT MAY CHANGE DUE TO UNIT OPTIONS.
6. BOTTOM OF GENERATOR SET MUST BE ENCLOSED TO PREVENT PEST INTRUSION AND
   RECIRCULATION OF DISCHARGE AIR AND/OR IMPROPER COOLING AIR FLOW.
7. EXHAUST SYSTEM MAXIMUM BACK PRESSURE: 24 INCHES H2O.
8. REFERENCE OWNERS MANUAL FOR LIFTING WARNINGS.
9. MOUNTING BOLTS OR STUDS TO MOUNTING SURFACE SHALL BE 5/8-11 GRADE 5
   (USE STANDARD SAE TORQUE SPECS)
10. MUST ALLOW FREE FLOW OF INTAKE AIR, DISCHARGE AIR AND EXHAUST. SEE SPEC
    SHEET FOR MINIMUM AIR FLOW AND MAXIMUM RESTRICTION REQUIREMENTS.
11. GENERATOR MUST BE INSTALLED SUCH THAT FRESH COOLING AIR IS AVAILABLE
    AND THAT DISCHARGE AIR FROM RADIATOR IS NOT RECIRCULATED.
12. EXHAUST MUFFLER ENCLOSED WITHIN GENERATOR ENCLOSURE,
    REMOVE ENCLOSURE TO ACCESS EXHAUST MUFFLER.

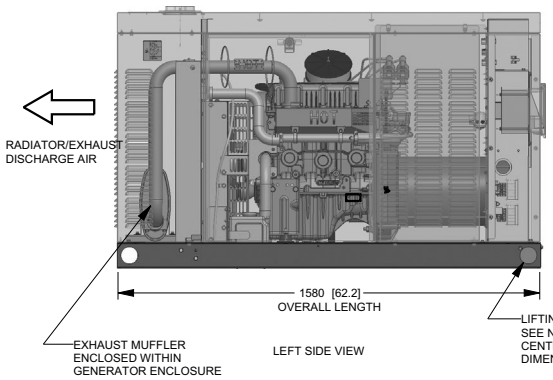

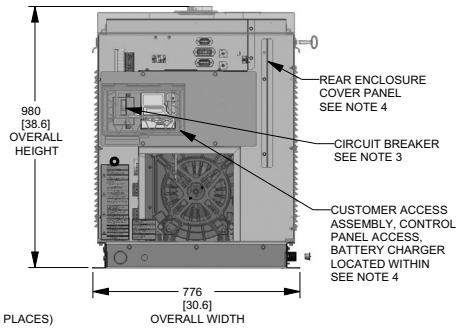

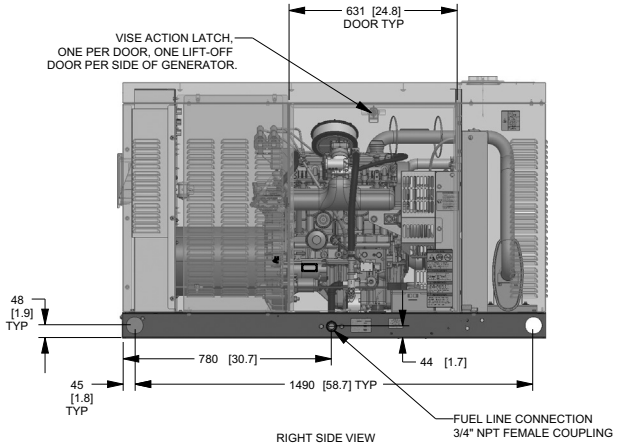

WEIGHT DATA				
ENGINE/KW	ENCLOSURE MATERIAL	WEIGHT GENSET ONLY KG [LBS]	WEIGHT SHIPPING SKID KG [LBS]	SHIPPING WEIGHT KG [LBS]
1.5L/25KW	ST	392 [865]	30 [66]	422 [931]
1.5L/30KW	ST	406 [895]	30 [66]	436 [961]
1.5L/25KW	AL	352 [777]	30 [66]	382 [843]
1.5L/30KW	AL	366 [807]	30 [66]	396 [873]

0K8420-D 25/30 kW (1.5 L) Page 2 of 2

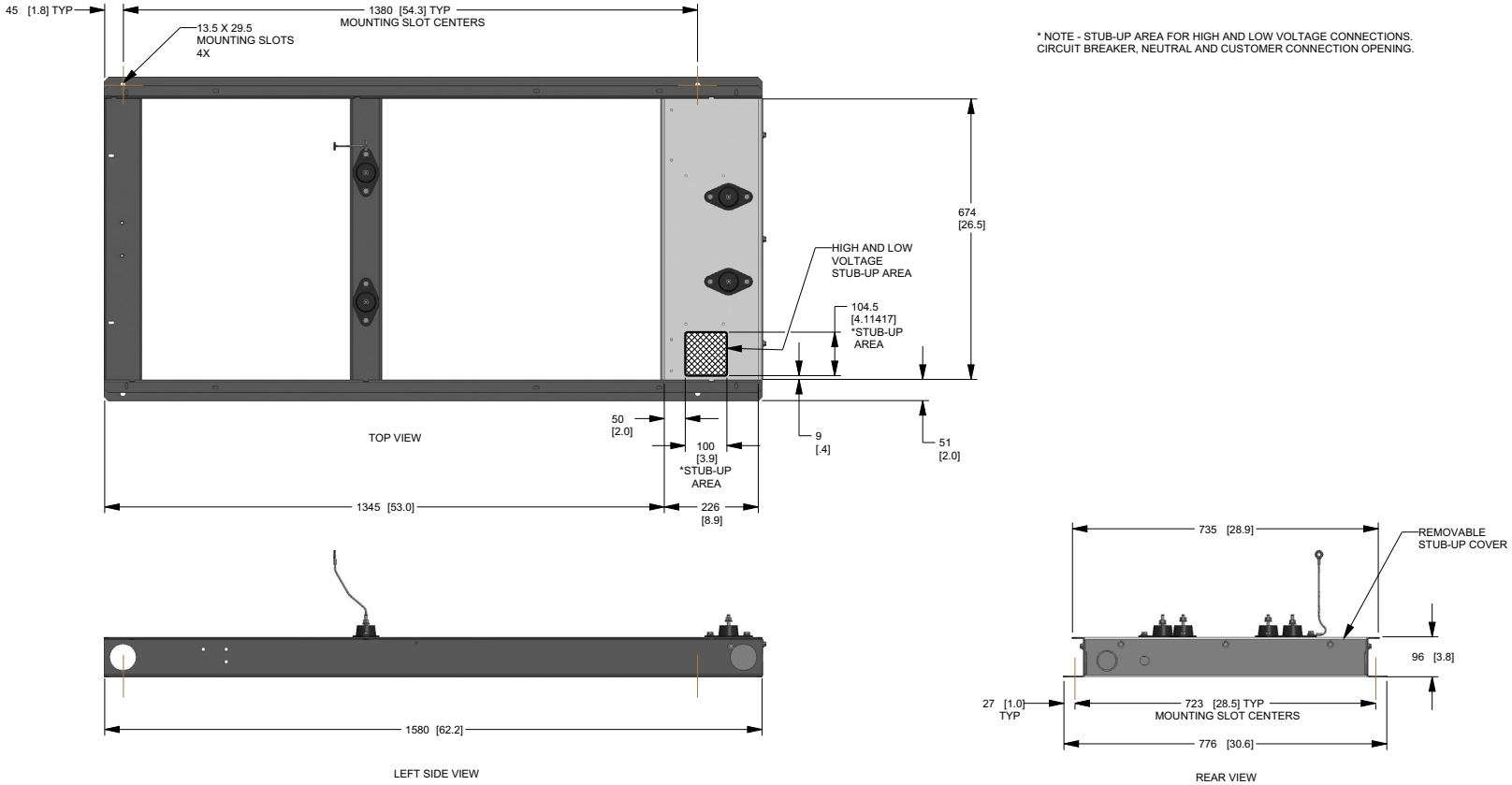

0K8624-D 22/27 kW (2.4 L) Page 1 of 2

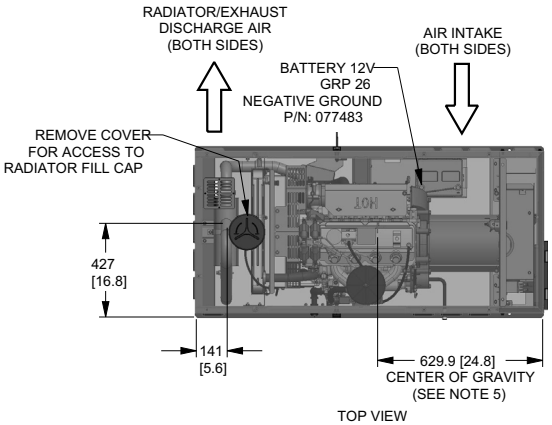

TOP VIEW

SERVICE ITEM	2.4L
OIL FILL CAP	EITHER SIDE
OIL DIP STICK	RIGHT SIDE
OIL FILTER	RIGHT SIDE
OIL DRAIN HOSE	LEFT SIDE
RADIATOR DRAIN	LEFT SIDE
COOLANT RECOVERY BOTTLE	LEFT SIDE
RADIATOR FILL CAP	ROOF TOP
AIR CLEANER ELEMENT	LEFT SIDE
SPARK PLUGS	LEFT SIDE
MUFFLER	SEE NOTE 11
DRIVE BELT	EITHER SIDE
FAN BELT	SEE NOTE 11
BATTERY	LEFT SIDE

REFERENCE OWNERS MANUAL FOR PERIODIC REPLACEMENT PART LISTINGS.

NOTES:

1. MINIMUM CONCRETE PAD SIZE: 929.6 (36.6") WIDE X 1732.3 (68.2") LONG. REFERENCE INSTALLATION GUIDE SUPPLIED WITH UNIT FOR CONCRETE PAD GUIDELINES.
2. ALLOW SUFFICIENT ROOM ON ALL SIDES OF THE GENERATOR FOR MAINTENANCE AND SERVICING. THIS UNIT MUST BE INSTALLED IN ACCORDANCE WITH CURRENT APPLICABLE NFPA 37 AND NFPA 70 STANDARDS AS WELL AS ANY OTHER FEDERAL, STATE, AND LOCAL CODES.
3. CONTROL PANEL / CIRCUIT BREAKER INFORMATION:
   - SEE SPECIFICATION SHEET OR OWNERS MANUAL
   - ACCESSIBLE THROUGH CUSTOMER ACCESS ASSEMBLY DOOR ON REAR OF GENERATOR.
4. REMOVE THE REAR ENCLOSURE COVER PANEL TO ACCESS THE STUB-UP AREAS AS FOLLOWS:
   - HIGH VOLTAGE CONNECTION INCLUDING AC LOAD LEAD CONDUIT CONNECTION NEUTRAL CONNECTION, BATTERY CHARGER 120 VOLT AC (0.5 AMP MAX) CONNECTION.
   - LOW VOLTAGE CONNECTION INCLUDING TRANSFER SWITCH CONTROL WIRES.
5. CENTER OF GRAVITY AND WEIGHT MAY CHANGE DUE TO UNIT OPTIONS.
6. BOTTOM OF GENERATOR SET MUST BE ENCLOSED TO PREVENT PEST INTRUSION AND RECIRCULATION OF DISCHARGE AIR AND/OR IMPROPER COOLING AIR FLOW.
7. REFERENCE OWNERS MANUAL FOR LIFTING WARNINGS.
8. MOUNTING BOLTS OR STUDS TO MOUNTING SURFACE SHALL BE 5/8-11 GRADE 5 (USE STANDARD SAE TORQUE SPECS)
9. MUST ALLOW FREE FLOW OF INTAKE AIR, DISCHARGE AIR AND EXHAUST. SEE SPEC SHEET FOR MINIMUM AIR FLOW AND MAXIMUM RESTRICTION REQUIREMENTS.
10. GENERATOR MUST BE INSTALLED SUCH THAT FRESH COOLING AIR IS AVAILABLE AND THAT DISCHARGE AIR FROM RADIATOR IS NOT RECIRCULATED.
11. EXHAUST MUFFLER AND FAN BELT ENCLOSED WITHIN GENERATOR ENCLOSURE, REMOVE FRONT PANEL TO ACCESS.

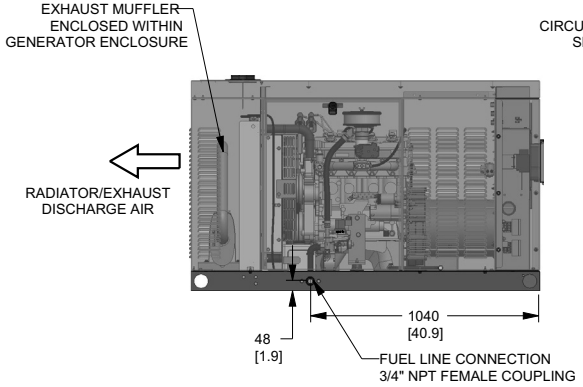

LEFT SIDE VIEW

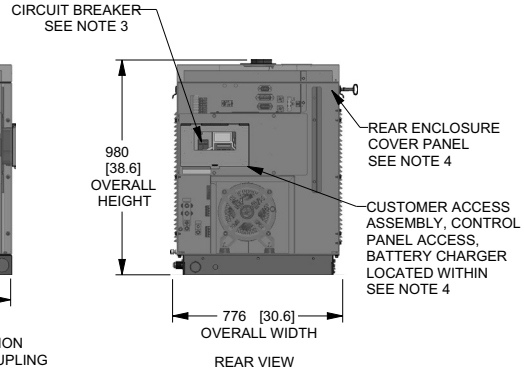

REAR VIEW

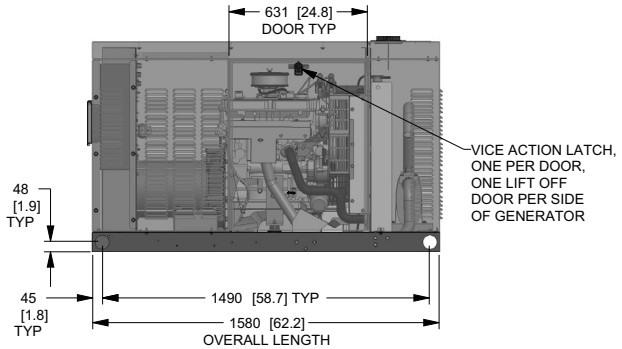

RIGHT SIDE VIEW

WEIGHT DATA				
ENGINE/KW KVA	ENCLOSURE MATERIAL	WEIGHT GENSET ONLY KG [LBS]	WEIGHT SHIPPING SKID KG [LBS]	SHIPPING WEIGHT KG [LBS]
2.4L 22KW (60HZ) SINGLE PHASE 17.4KVA (50HZ) THREE PHASE 22KVA (50HZ)	AL	410.5 [905]	30 [66]	440 [971]
2.4L 27KW (60HZ) SINGLE PHASE 21.6KVA (50HZ) THREE PHASE 27KVA (50HZ)	AL	426 [940]	30 [66]	456 [1006]

DIMENSIONS: MM [INCH]

0K8624-D 22/27 kW (2.4 L) Page 2 of 2

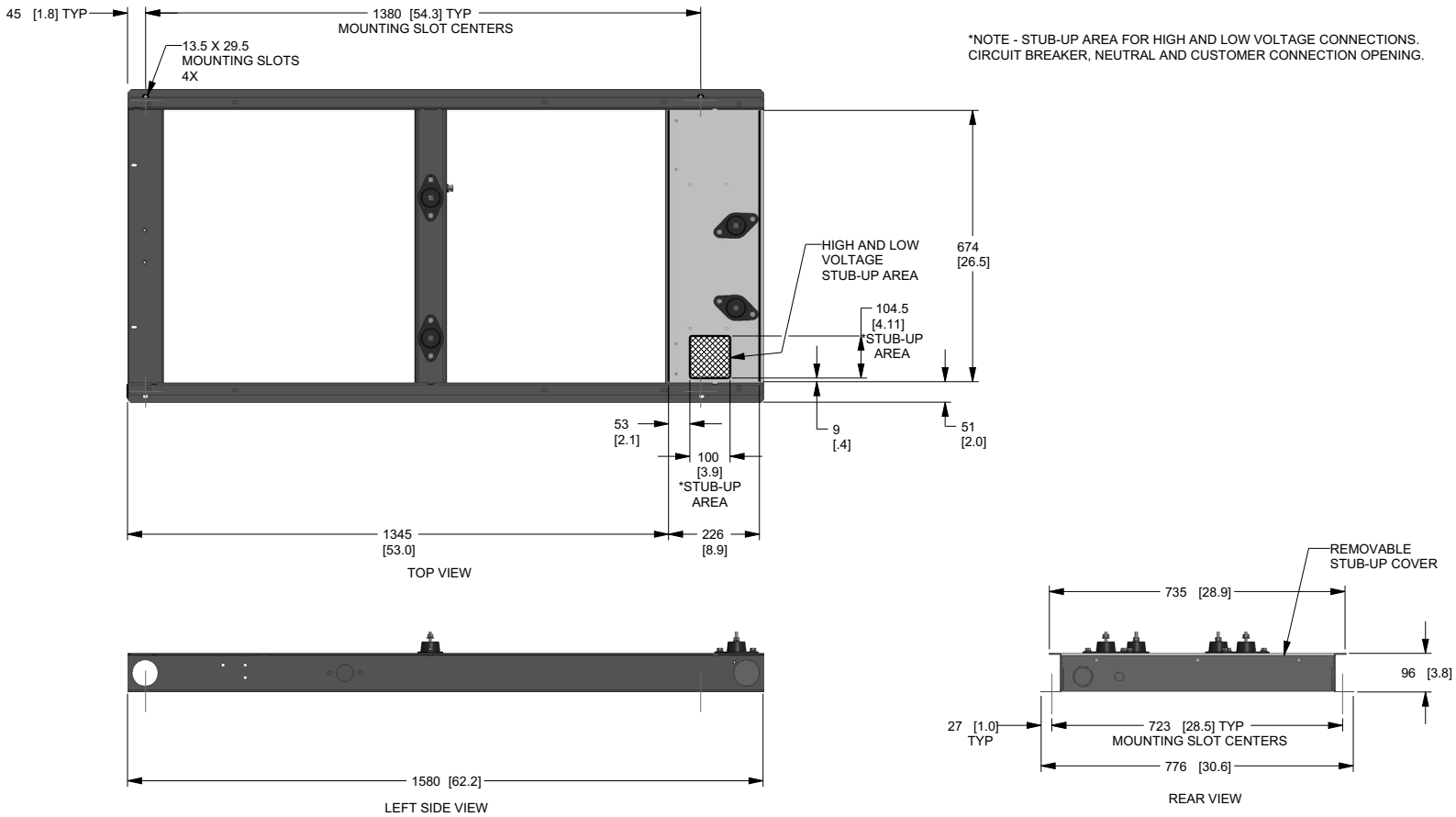

DIMENSIONS: MM [INCH]

0K8636-C 36/45 kW (2.4 L) Page 1 of 2

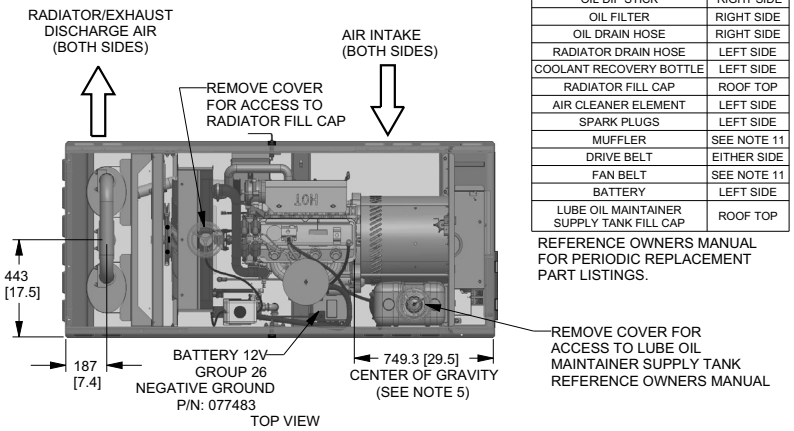

SERVICE ITEM	2.4L
OIL FILL CAP	EITHER SIDE
OIL DIP STICK	RIGHT SIDE
OIL FILTER	RIGHT SIDE
OIL DRAIN HOSE	RIGHT SIDE
RADIATOR DRAIN HOSE	LEFT SIDE
COOLANT RECOVERY BOTTLE	LEFT SIDE
RADIATOR FILL CAP	ROOF TOP
AIR CLEANER ELEMENT	LEFT SIDE
SPARK PLUGS	LEFT SIDE
MUFFLER	SEE NOTE 11
DRIVE BELT	EITHER SIDE
FAN BELT	SEE NOTE 11
BATTERY	LEFT SIDE
LUBE OIL MAINTAINER SUPPLY TANK FILL CAP	ROOF TOP

REFERENCE OWNERS MANUAL FOR PERIODIC REPLACEMENT PART LISTINGS.

NOTES:

1. MINIMUM CONCRETE PAD SIZE: 1041.4 (41") WIDE X 2103.1 (82.8") LONG. REFERENCE INSTALLATION GUIDE SUPPLIED WITH UNIT FOR CONCRETE PAD GUIDELINES.
2. ALLOW SUFFICIENT ROOM ON ALL SIDES OF THE GENERATOR FOR MAINTENANCE AND SERVICING. THIS UNIT MUST BE INSTALLED IN ACCORDANCE WITH CURRENT APPLICABLE NFPA 37 AND NFPA 70 STANDARDS AS WELL AS ANY OTHER FEDERAL, STATE, AND LOCAL CODES.
3. CONTROL PANEL / CIRCUIT BREAKER INFORMATION:
   - SEE SPECIFICATION SHEET OR OWNERS MANUAL
   - ACCESSIBLE THROUGH CUSTOMER ACCESS ASSEMBLY DOOR ON REAR OF GENERATOR.
4. REMOVE THE REAR ENCLOSURE COVER PANEL TO ACCESS THE STUB-UP AREAS AS FOLLOWS:
   - HIGH VOLTAGE CONNECTION INCLUDING AC LOAD LEAD CONDUIT CONNECTION NEUTRAL CONNECTION, BATTERY CHARGER 120 VOLT AC (0.5 AMP MAX) CONNECTION.
   - LOW VOLTAGE CONNECTION INCLUDING TRANSFER SWITCH CONTROL WIRES.
5. CENTER OF GRAVITY AND WEIGHT MAY CHANGE DUE TO UNIT OPTIONS.
6. BOTTOM OF GENERATOR SET MUST BE ENCLOSED TO PREVENT PEST INTRUSION AND RECIRCULATION OF DISCHARGE AIR AND/OR IMPROPER COOLING AIR FLOW.
7. REFERENCE OWNERS MANUAL FOR LIFTING WARNINGS.
8. MOUNTING BOLTS OR STUDS TO MOUNTING SURFACE SHALL BE 5/8-11 GRADE 5 (USE STANDARD SAE TORQUE SPECS)
9. MUST ALLOW FREE FLOW OF INTAKE AIR, DISCHARGE AIR AND EXHAUST. SEE SPEC SHEET FOR MINIMUM AIR FLOW AND MAXIMUM RESTRICTION REQUIREMENTS.
10. GENERATOR MUST BE INSTALLED SUCH THAT FRESH COOLING AIR IS AVAILABLE AND THAT DISCHARGE AIR FROM RADIATOR IS NOT RECIRCULATED.
11. EXHAUST MUFFLER AND FAN BELT ENCLOSED WITHIN GENERATOR ENCLOSURE, REMOVE FRONT PANEL TO ACCESS.

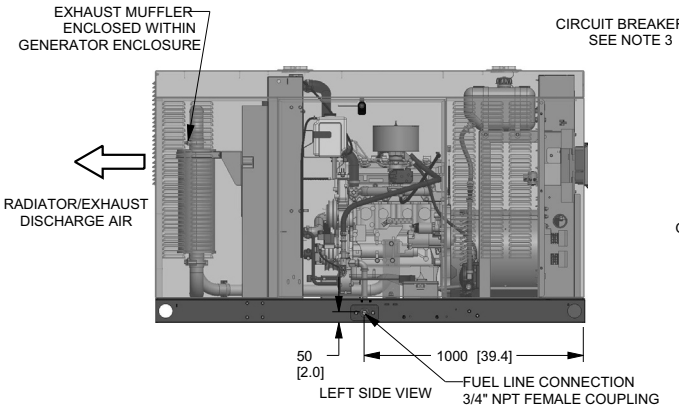

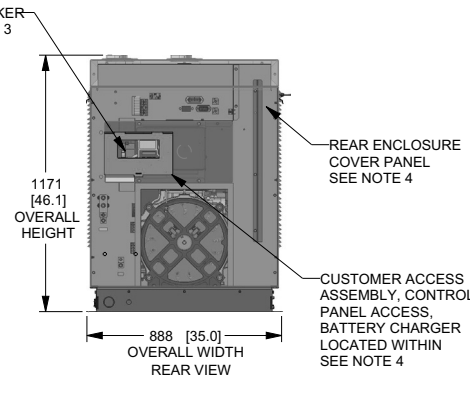

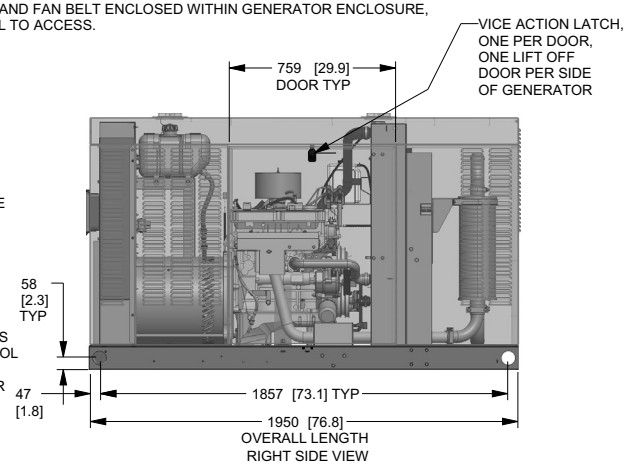

WEIGHT DATA				
ENGINE/KW	ENCLOSURE MATERIAL	WEIGHT GENSET ONLY KG [LBS]	WEIGHT SHIPPING SKID KG [LBS]	SHIPPING WEIGHT KG [LBS]
2.4L 36KW	ST	569 [1255]	44 [98]	613 [1353]
2.4L 36KW	AL	545 [1202]	44 [98]	590 [1300]
2.4L 45KW	ST	596 [1313]	44 [98]	640 [1411]
2.4L 45KW	AL	572 [1260]	44 [98]	616 [1358]

DIMENSIONS: MM [INCH]

0K8636-C 36/45 kW (2.4 L) Page 2 of 2

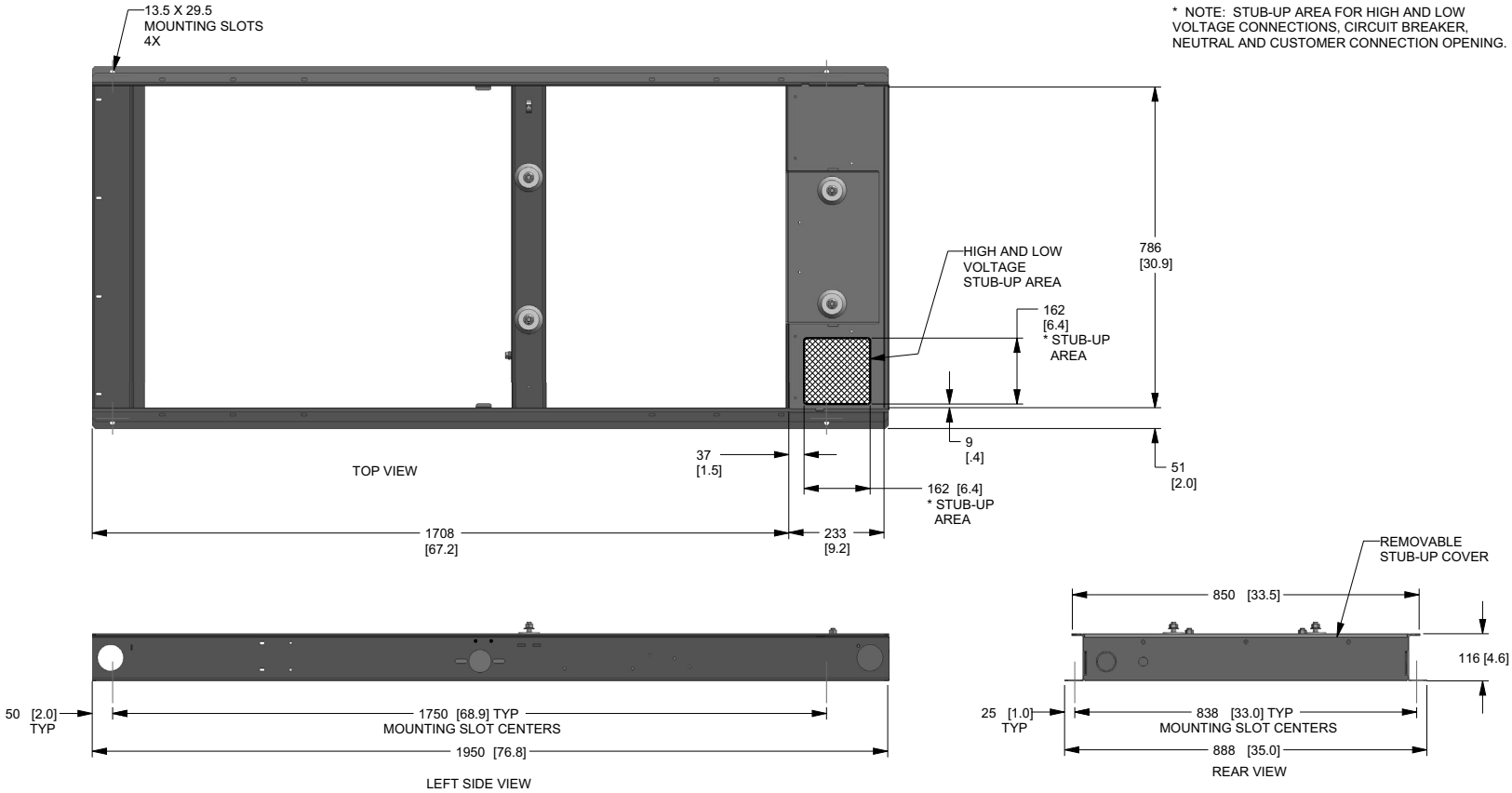

0K9268-E 32/38 kW (2.4 L) Page 1 of 2

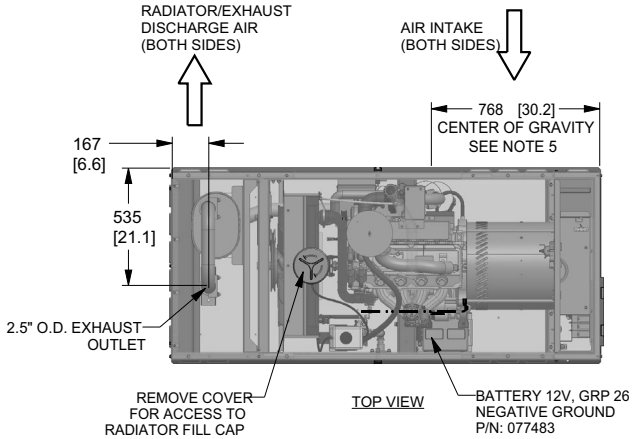

SERVICE ITEM	2.4L
OIL FILL CAP	EITHER SIDE
OIL DIP STICK	RIGHT SIDE
OIL FILTER	RIGHT SIDE
OIL DRAIN HOSE	RIGHT SIDE
RADIATOR DRAIN HOSE	LEFT SIDE
COOLANT RECOVERY BOTTLE	LEFT SIDE
RADIATOR FILL CAP ACCESS	ROOF TOP
AIR CLEANER ELEMENT	RIGHT SIDE
SPARK PLUGS	LEFT SIDE
MUFFLER	SEE NOTE 11
DRIVE BELT	EITHER SIDE
FAN BELT	SEE NOTE 11
BATTERY	LEFT SIDE

REFERENCE OWNERS MANUAL FOR PERIODIC REPLACEMENT PART LISTINGS.

NOTES:

1. MINIMUM CONCRETE PAD SIZE: 1041.4 (41") WIDE X 2103.1 (82.8") LONG. REFERENCE INSTALLATION GUIDE SUPPLIED WITH UNIT FOR CONCRETE PAD GUIDELINES.
2. ALLOW SUFFICIENT ROOM ON ALL SIDES OF THE GENERATOR FOR MAINTENANCE AND SERVICING. THIS UNIT MUST BE INSTALLED IN ACCORDANCE WITH CURRENT APPLICABLE NFPA 37 AND NFPA 70 STANDARDS AS WELL AS ANY OTHER FEDERAL, STATE, AND LOCAL CODES.
3. CONTROL PANEL / CIRCUIT BREAKER INFORMATION:
   - SEE SPECIFICATION SHEET OR OWNERS MANUAL
   - ACCESSIBLE THROUGH CUSTOMER ACCESS ASSEMBLY DOOR ON REAR OF GENERATOR.
4. REMOVE THE REAR ENCLOSURE COVER PANEL TO ACCESS THE STUB-UP AREAS AS FOLLOWS:
   - HIGH VOLTAGE CONNECTION INCLUDING AC LOAD LEAD CONDUIT CONNECTION, NEUTRAL CONNECTION, AND BATTERY CHARGER 120 VOLT AC (0.5 AMP MAX) CONNECTION.
   - LOW VOLTAGE CONNECTION INCLUDING TRANSFER SWITCH CONTROL WIRES.
5. CENTER OF GRAVITY AND WEIGHT MAY CHANGE DUE TO UNIT OPTIONS.
6. BOTTOM OF GENERATOR SET MUST BE ENCLOSED TO PREVENT PEST INTRUSION AND RECIRCULATION OF DISCHARGE AIR AND/OR IMPROPER COOLING AIR FLOW.
7. REFERENCE OWNERS MANUAL FOR LIFTING WARNINGS.
8. MOUNTING BOLTS OR STUDS TO MOUNTING SURFACE SHALL BE 5/8-11 GRADE 5 (USE STANDARD SAE TORQUE SPECS)
9. MUST ALLOW FREE FLOW OF INTAKE AIR, DISCHARGE AIR AND EXHAUST. SEE SPEC SHEET FOR MINIMUM AIR FLOW AND MAXIMUM RESTRICTION REQUIREMENTS.
10. GENERATOR MUST BE INSTALLED SUCH THAT FRESH COOLING AIR IS AVAILABLE AND THAT DISCHARGE AIR FROM RADIATOR IS NOT RECIRCULATED.
11. EXHAUST MUFFLER AND FAN BELT ARE ENCLOSED WITHIN GENERATOR ENCLOSURE, REMOVE FRONT PANEL TO ACCESS.

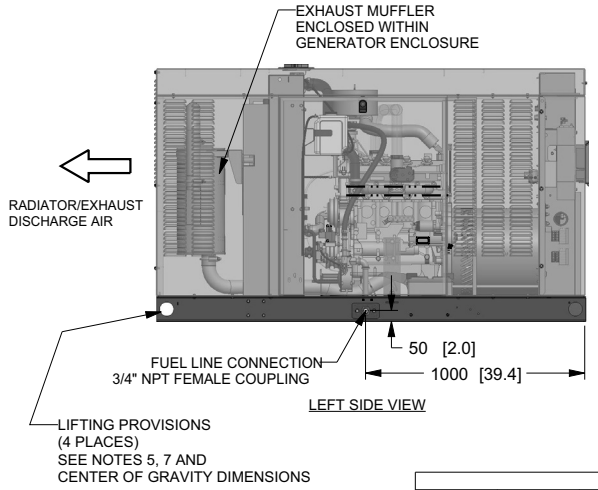

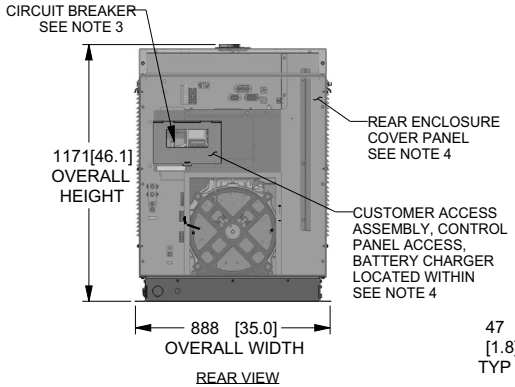

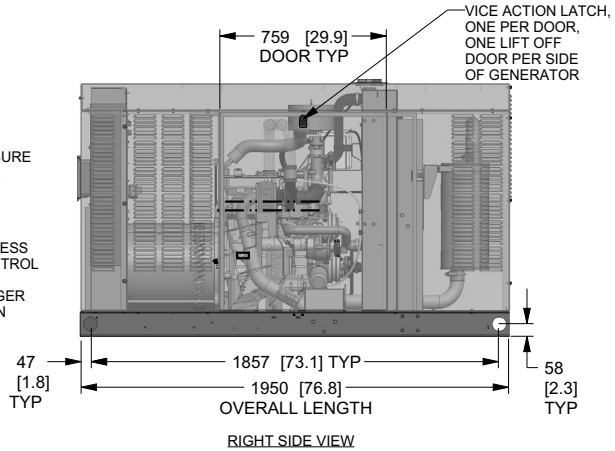

WEIGHT DATA				
ENGINE/KW	ENCLOSURE MATERIAL	WEIGHT GENSET ONLY KG [LBS]	WEIGHT SHIPPING SKID KG [LBS]	SHIPPING WEIGHT KG [LBS]
2.4L 32KW	AL	556 [1225]	44 [98]	600 [1323]
2.4L 38KW	AL	560 [1235]	44 [98]	605 [1333]

DIMENSIONS: MM [INCH]

0K9268-E 32/38 kW (2.4 L) Page 2 of 2

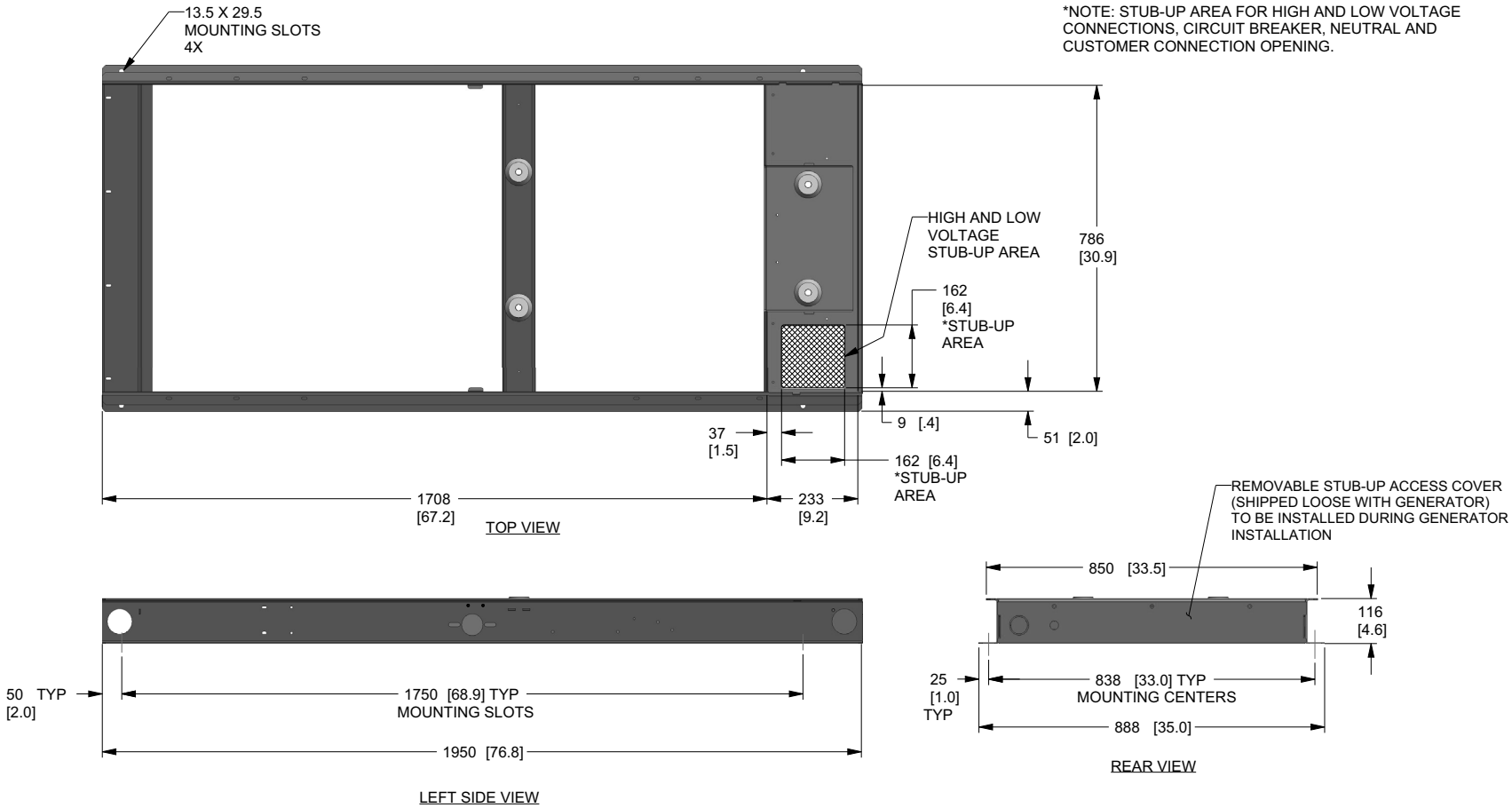

0L2090-C 60 kW (2.4 L) Page 1 of 2

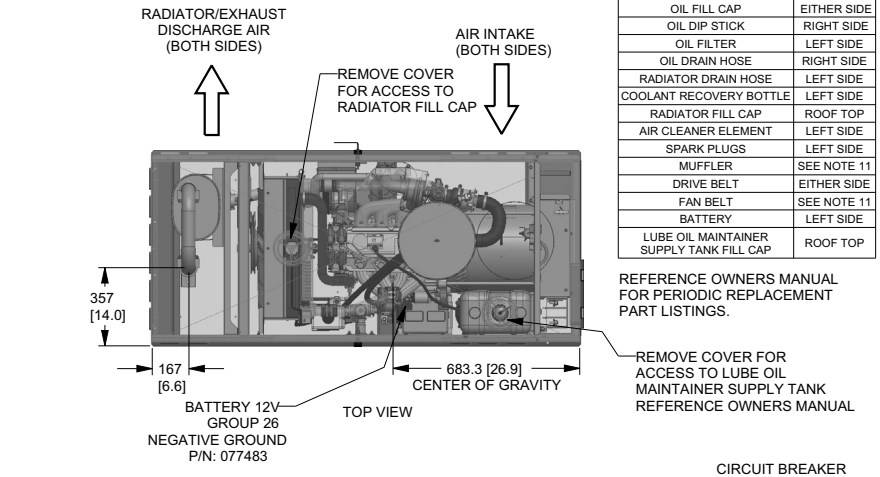

SERVICE ITEM	2.4L
OIL FILL CAP	EITHER SIDE
OIL DIP STICK	RIGHT SIDE
OIL FILTER	LEFT SIDE
OIL DRAIN HOSE	RIGHT SIDE
RADIATOR DRAIN HOSE	LEFT SIDE
COOLANT RECOVERY BOTTLE	LEFT SIDE
RADIATOR FILL CAP	ROOF TOP
AIR CLEANER ELEMENT	LEFT SIDE
SPARK PLUGS	LEFT SIDE
MUFFLER	SEE NOTE 11
DRIVE BELT	EITHER SIDE
FAN BELT	SEE NOTE 11
BATTERY	LEFT SIDE
LUBE OIL MAINTAINER SUPPLY TANK FILL CAP	ROOF TOP

REFERENCE OWNERS MANUAL FOR PERIODIC REPLACEMENT PART LISTINGS.

NOTES:

1. MINIMUM CONCRETE PAD SIZE: 1041.4 (41") WIDE X 2103.1 (82.8") LONG. REFERENCE INSTALLATION GUIDE SUPPLIED WITH UNIT FOR CONCRETE PAD GUIDELINES.
2. ALLOW SUFFICIENT ROOM ON ALL SIDES OF THE GENERATOR FOR MAINTENANCE AND SERVICING. THIS UNIT MUST BE INSTALLED IN ACCORDANCE WITH CURRENT APPLICABLE NFPA 37 AND NFPA 70 STANDARDS AS WELL AS ANY OTHER FEDERAL, STATE, AND LOCAL CODES.
3. CONTROL PANEL / CIRCUIT BREAKER INFORMATION:
   - SEE SPECIFICATION SHEET OR OWNERS MANUAL
   - ACCESSIBLE THROUGH CUSTOMER ACCESS ASSEMBLY DOOR ON REAR OF GENERATOR.
4. REMOVE THE REAR ENCLOSURE COVER PANEL TO ACCESS THE STUB-UP AREAS AS FOLLOWS:
   - HIGH VOLTAGE CONNECTION INCLUDING AC LOAD LEAD CONDUIT CONNECTION NEUTRAL CONNECTION, BATTERY CHARGER 120 VOLT AC (0.5 AMP MAX) CONNECTION.
   - LOW VOLTAGE CONNECTION INCLUDING TRANSFER SWITCH CONTROL WIRES.
5. CENTER OF GRAVITY AND WEIGHT MAY CHANGE DUE TO UNIT OPTIONS.
6. BOTTOM OF GENERATOR SET MUST BE ENCLOSED TO PREVENT PEST INTRUSION AND RECIRCULATION OF DISCHARGE AIR AND/OR IMPROPER COOLING AIR FLOW.
7. REFERENCE OWNERS MANUAL FOR LIFTING WARNINGS.
8. MOUNTING BOLTS OR STUDS TO MOUNTING SURFACE SHALL BE 5/8-11 GRADE 5 (USE STANDARD SAE TORQUE SPECS)
9. MUST ALLOW FREE FLOW OF INTAKE AIR, DISCHARGE AIR AND EXHAUST. SEE SPEC SHEET FOR MINIMUM AIR FLOW AND MAXIMUM RESTRICTION REQUIREMENTS.
10. GENERATOR MUST BE INSTALLED SUCH THAT FRESH COOLING AIR IS AVAILABLE AND THAT DISCHARGE AIR FROM RADIATOR IS NOT RECIRCULATED.
11. EXHAUST MUFFLER AND FAN BELT ENCLOSED WITHIN GENERATOR ENCLOSURE, REMOVE FRONT PANEL TO ACCESS.

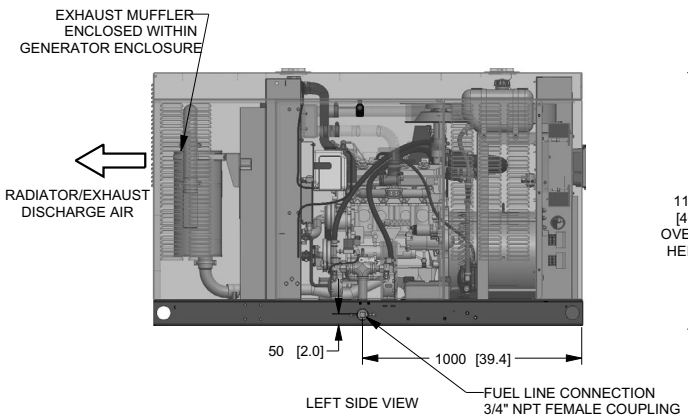

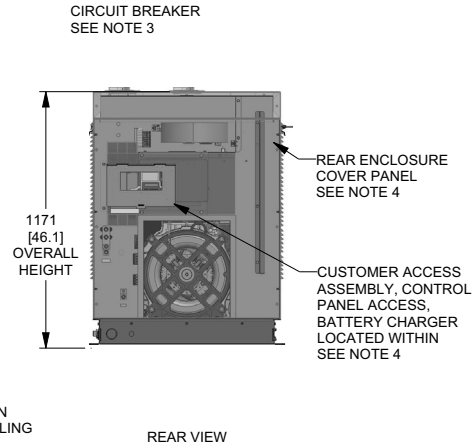

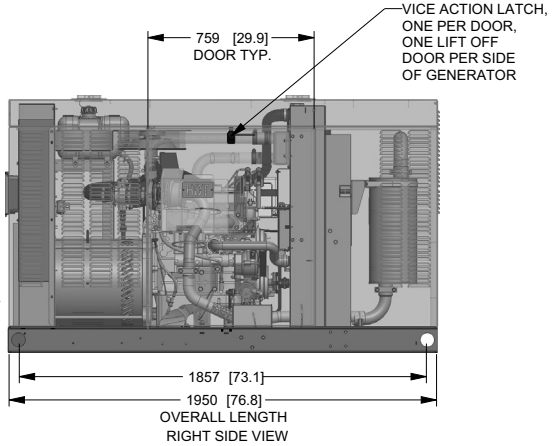

WEIGHT DATA				
ENGINE/KW	ENCLOSURE MATERIAL	WEIGHT GENSET ONLY KG [LBS]	WEIGHT SHIPPING SKID KG [LBS]	SHIPPING WEIGHT KG [LBS]
2.4L 60KW	ST	582 [1283]	44 [98]	626 [1381]
2.4L 60KW	AL	558 [1230]	44 [98]	602 [1328]

0L2090-C 60 kW (2.4 L) Page 2 of 2

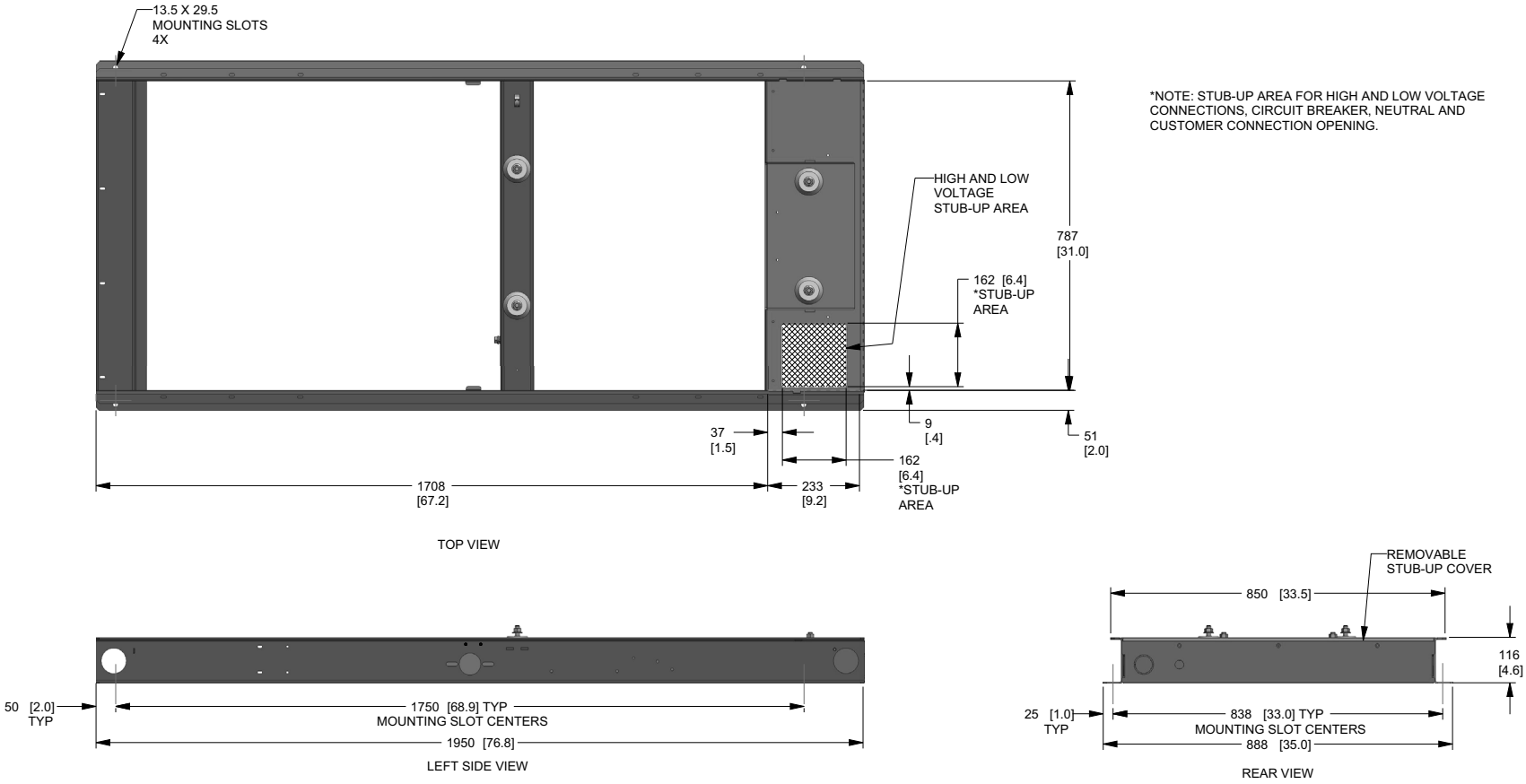

DIMENSIONS: MM [INCH]

0K9243-C 48 kW (5.4 L) Page 1 of 2

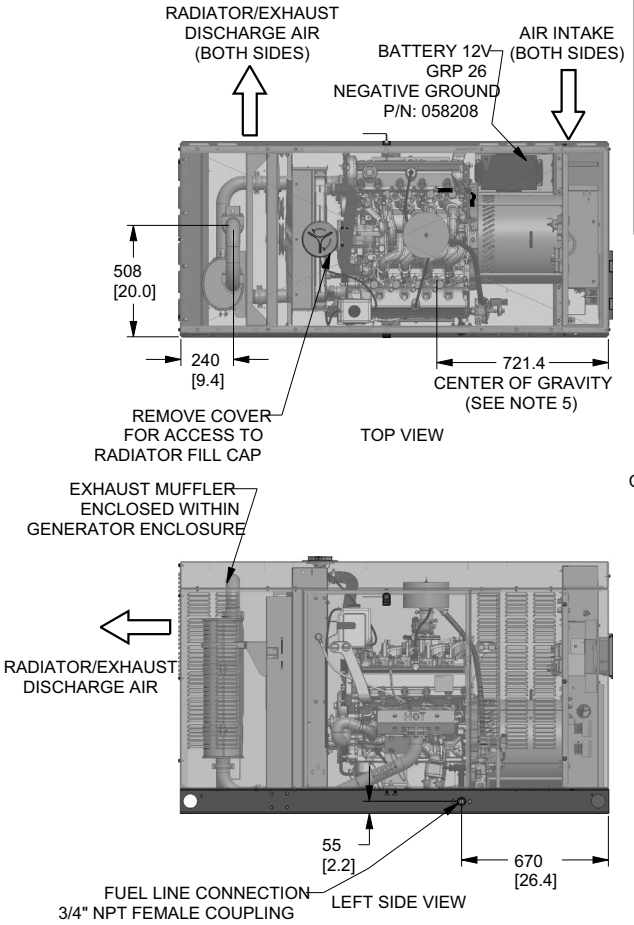

SERVICE ITEM	5.4L
OIL FILL CAP	RIGHT SIDE
OIL DIP STICK	LEFT SIDE
OIL FILTER	LEFT SIDE
OIL DRAIN HOSE	RIGHT SIDE
RADIATOR DRAIN HOSE	LEFT SIDE
COOLANT RECOVERY BOTTLE	LEFT SIDE
RADIATOR FILL CAP	ROOF TOP
AIR CLEANER ELEMENT	EITHER SIDE
SPARK PLUGS	EITHER SIDE
MUFFLER	SEE NOTE 11
DRIVE BELT	EITHER SIDE
FAN BELT	SEE NOTE 11
BATTERY	RIGHT SIDE

REFERENCE OWNERS MANUAL FOR PERIODIC REPLACEMENT PART LISTINGS.

NOTES:

1. MINIMUM CONCRETE PAD SIZE: 1041.4 (41") WIDE X 2103.1 (82.8") LONG. REFERENCE INSTALLATION GUIDE SUPPLIED WITH UNIT FOR CONCRETE PAD GUIDELINES.
2. ALLOW SUFFICIENT ROOM ON ALL SIDES OF THE GENERATOR FOR MAINTENANCE AND SERVICING. THIS UNIT MUST BE INSTALLED IN ACCORDANCE WITH CURRENT APPLICABLE NFPA 37 AND NFPA 70 STANDARDS AS WELL AS ANY OTHER FEDERAL, STATE, AND LOCAL CODES.
3. CONTROL PANEL / CIRCUIT BREAKER INFORMATION:
   - SEE SPECIFICATION SHEET OR OWNERS MANUAL
   - ACCESSIBLE THROUGH CUSTOMER ACCESS ASSEMBLY DOOR ON REAR OF GENERATOR.
4. REMOVE THE REAR ENCLOSURE COVER PANEL TO ACCESS THE STUB-UP AREAS AS FOLLOWS:
   - HIGH VOLTAGE CONNECTION INCLUDING AC LOAD LEAD CONDUIT CONNECTION NEUTRAL CONNECTION, BATTERY CHARGER 120 VOLT AC (0.5 AMP MAX) CONNECTION.
   - LOW VOLTAGE CONNECTION INCLUDING TRANSFER SWITCH CONTROL WIRES.
5. CENTER OF GRAVITY AND WEIGHT MAY CHANGE DUE TO UNIT OPTIONS.
6. BOTTOM OF GENERATOR SET MUST BE ENCLOSED TO PREVENT PEST INTRUSION AND RECIRCULATION OF DISCHARGE AIR AND/OR IMPROPER COOLING AIR FLOW.
7. REFERENCE OWNERS MANUAL FOR LIFTING WARNINGS.
8. MOUNTING BOLTS OR STUDS TO MOUNTING SURFACE SHALL BE 5/8-11 GRADE 5 (USE STANDARD SAE TORQUE SPECS)
9. MUST ALLOW FREE FLOW OF INTAKE AIR, DISCHARGE AIR AND EXHAUST. SEE SPEC SHEET FOR MINIMUM AIR FLOW AND MAXIMUM RESTRICTION REQUIREMENTS.
10. GENERATOR MUST BE INSTALLED SUCH THAT FRESH COOLING AIR IS AVAILABLE AND THAT DISCHARGE AIR FROM RADIATOR IS NOT RECIRCULATED.
11. EXHAUST MUFFLER AND FAN BELT ENCLOSED WITHIN GENERATOR ENCLOSURE, REMOVE FRONT PANEL TO ACCESS.

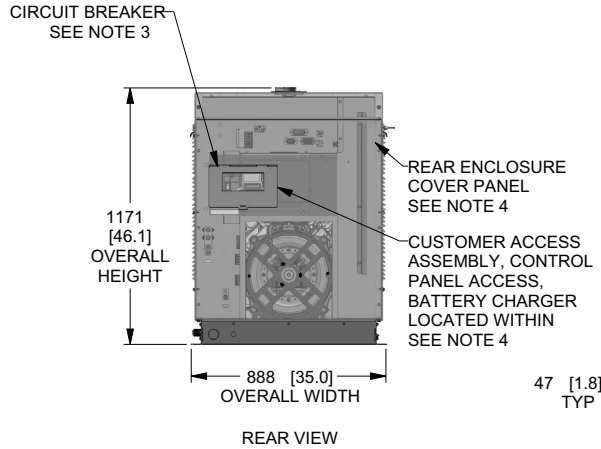

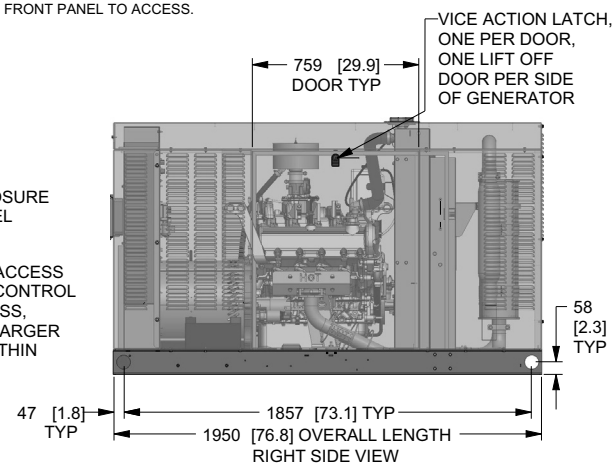

WEIGHT DATA				
ENGINE/KW	ENCLOSURE MATERIAL	WEIGHT GENSET ONLY KG [LBS]	WEIGHT SHIPPING SKID KG [LBS]	SHIPPING WEIGHT KG [LBS]
5.4L/48KW	AL	705 [1555]	44 [98]	750 [1653]

DIMENSIONS: MM [INCH]

0K9243-C 48 kW (5.4 L) Page 2 of 2

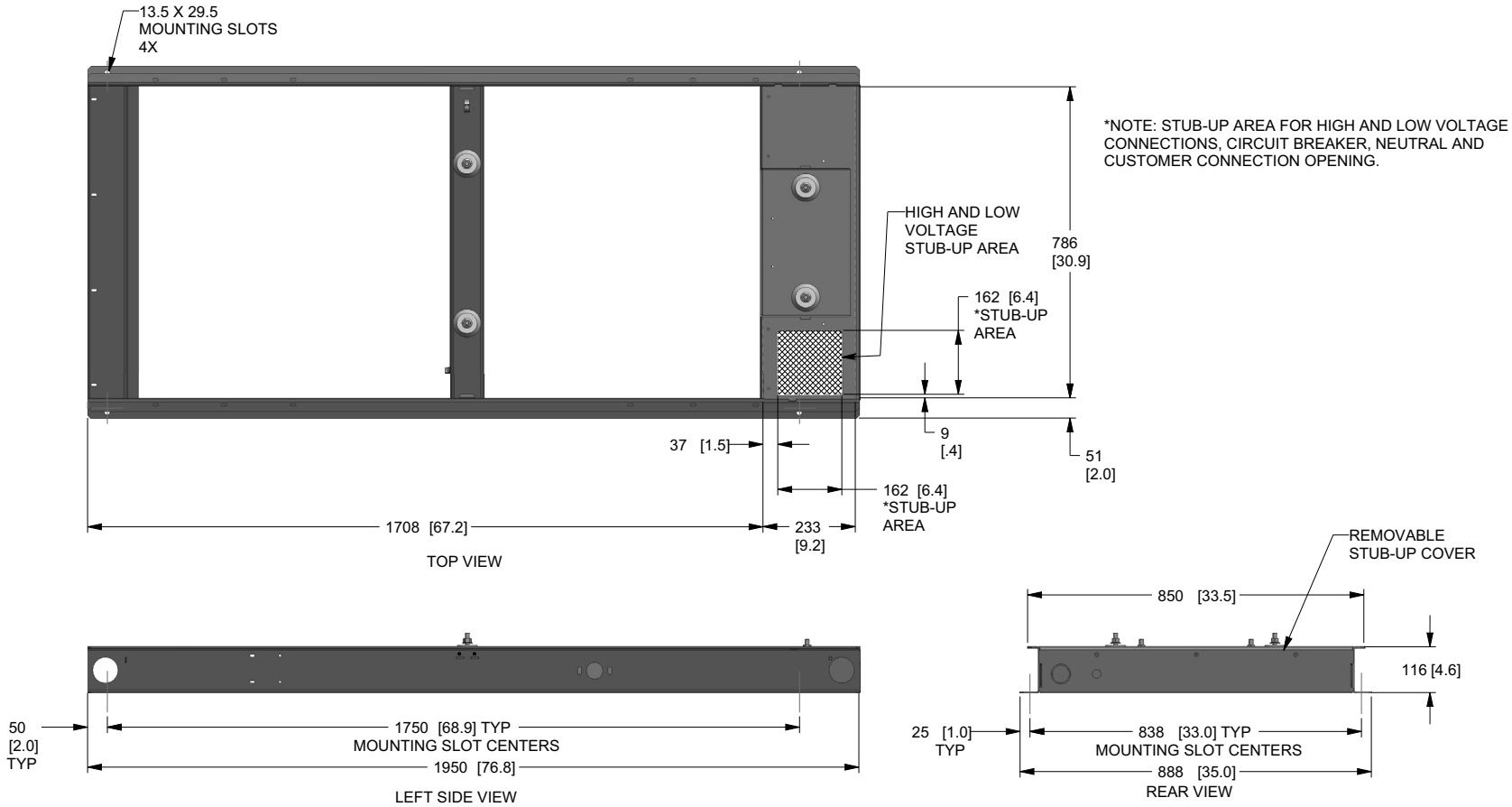

DIMENSIONS: MM [INCH]

Alternator AC Lead Connections

The electrical wires in the unit's AC connection (lower) panel should be installed according to number of leads and voltage/phase required for the application. The voltage and phase are described on the generator data label. The number of lead wires can be identified using the Specifications section and power output rating on the generator data label. For example, if generator produces 130kW, 277/480 volt, three-phase power, generator has 12 alternator output leads. ***Figure 11-3*** describes the stator power winding connection for the generator.

Four-Lead, Single-Phase Stator

See ***Figure 11-1***. Four-lead alternators are designed to supply electrical loads with voltage code "A" (240V, single-phase, 60 Hz). Electrical power is produced in the stator power windings. These windings were factory-connected to the main circuit breaker as shown.

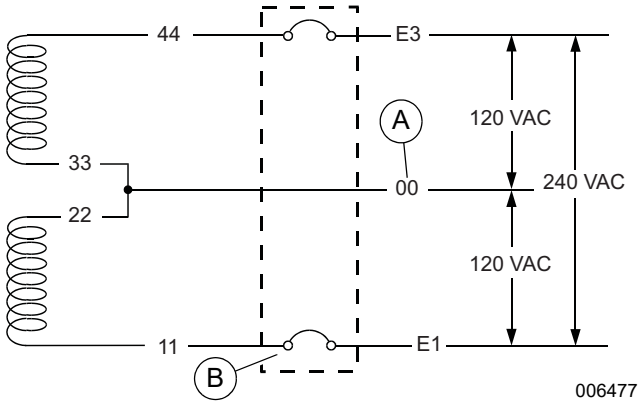

A	Neutral	**B**	Circuit breaker

Figure 11-1. Four-Lead, Single-Phase Stator

Rated voltage between each circuit breaker terminal is 240V. The rated voltage between each circuit breaker terminal and the neutral point 00 is 120V.

Alternator Power Winding Connections

Three-Phase Alternators ("Y" Configuration)

The Stationary Emergency Generator is designed to supply three-phase electrical loads. Electric power is produced in the alternator power windings. These windings were factory-connected to the main circuit breaker with a "Y" configuration as shown in ***Figure 11-2*** through ***Figure 11-6***.

Rated voltage between circuit breaker terminals E1–E2, E1–E3 and E2–E3 is 480V, 208V or 600V depending on model.

Rated voltage between each circuit breaker terminal and the neutral point 00 is 277V, 120V, or 346V depending on model.

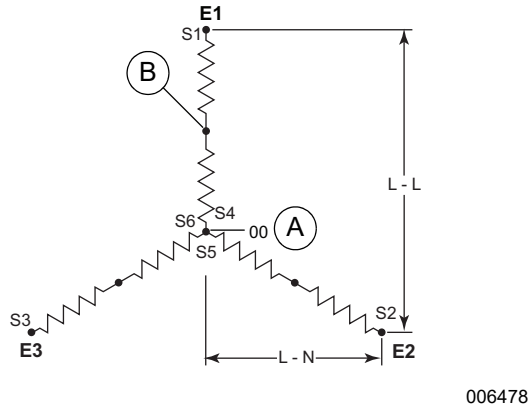

A	Neutral	**B**	Internal connections

Figure 11-2. Stator Power Winding Connections—Three-Phase, 277/480V (6 Lead)

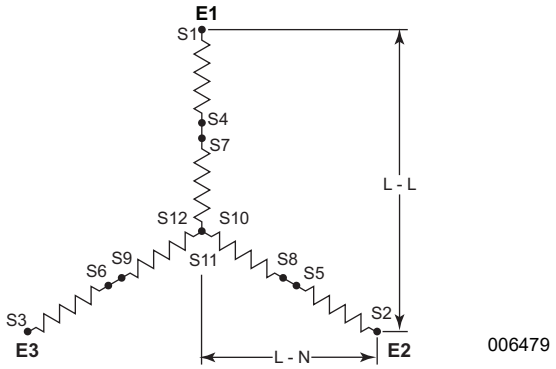

Figure 11-3. Stator Power Winding Connections—Three-Phase, 277/480V (12 Lead)

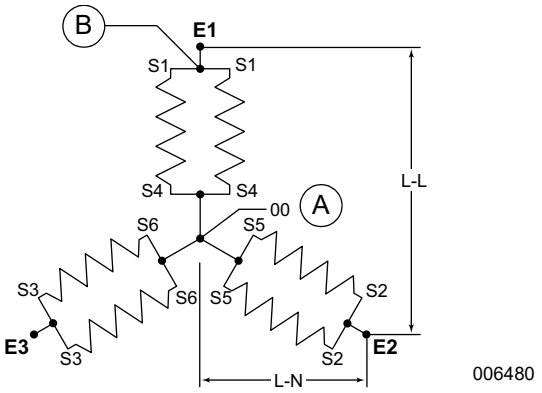

A	Neutral	B	Internal connections

Figure 11-4. Stator Power Winding Connections—Three-Phase, 120/208V (6 Lead)

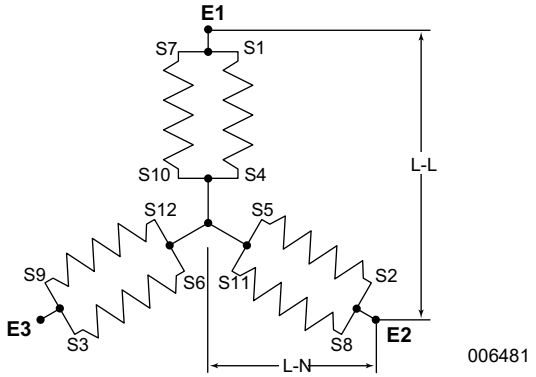

Figure 11-5. Stator Power Winding Connections—Three-Phase, 120/208V (12 Lead)

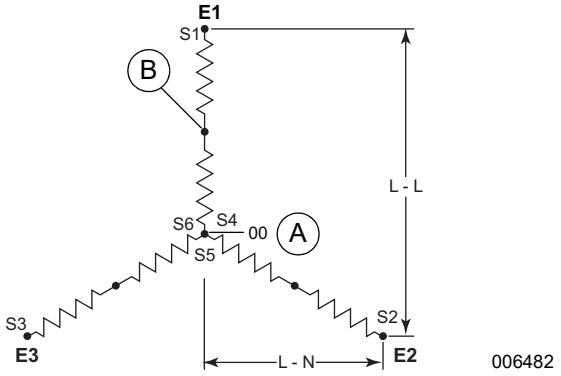

A	Neutral	B	Internal connections

Figure 11-6. Stator Power Winding Connections—Three-Phase, 346/600V (6 Lead)

Three-Phase Alternators (“Delta” Configuration)

The Stationary Emergency Generator is designed to supply three-phase electrical loads. Electric power is produced in the alternator power windings. These windings were factory-connected to the main circuit breaker with a “Delta” configuration as shown in ***Figure 11-7*** and ***Figure 11-8***.

Rated voltage between circuit breaker terminals E1–E2, E1–E3 and E2–E3 is 240V.

Rated voltage between E2 and the neutral point 00 is 208V. The rated voltage E1–00 and E3–00 is approximately 120V.

NOTE: Voltage measured from E2 to 00 can greatly vary when single-phase load is placed on alternator.

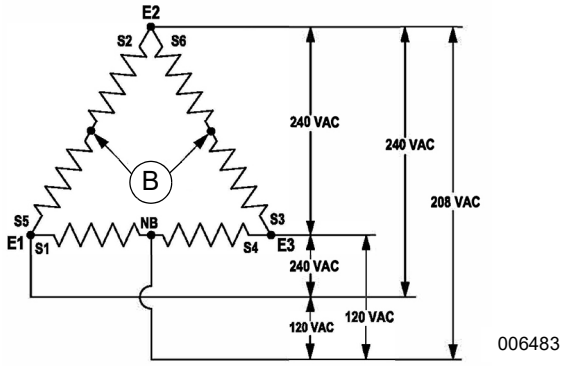

B	Internal connections

Figure 11-7. Stator Power Winding Connections—Three-Phase, 120/240V (6 Lead)

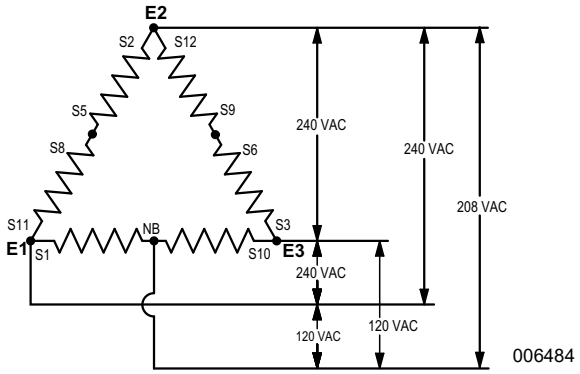

Figure 11-8. Stator Power Winding Connections—Three-Phase, 120/240V (12 Lead)

Alternator Wiring Diagram

(1 of 4)

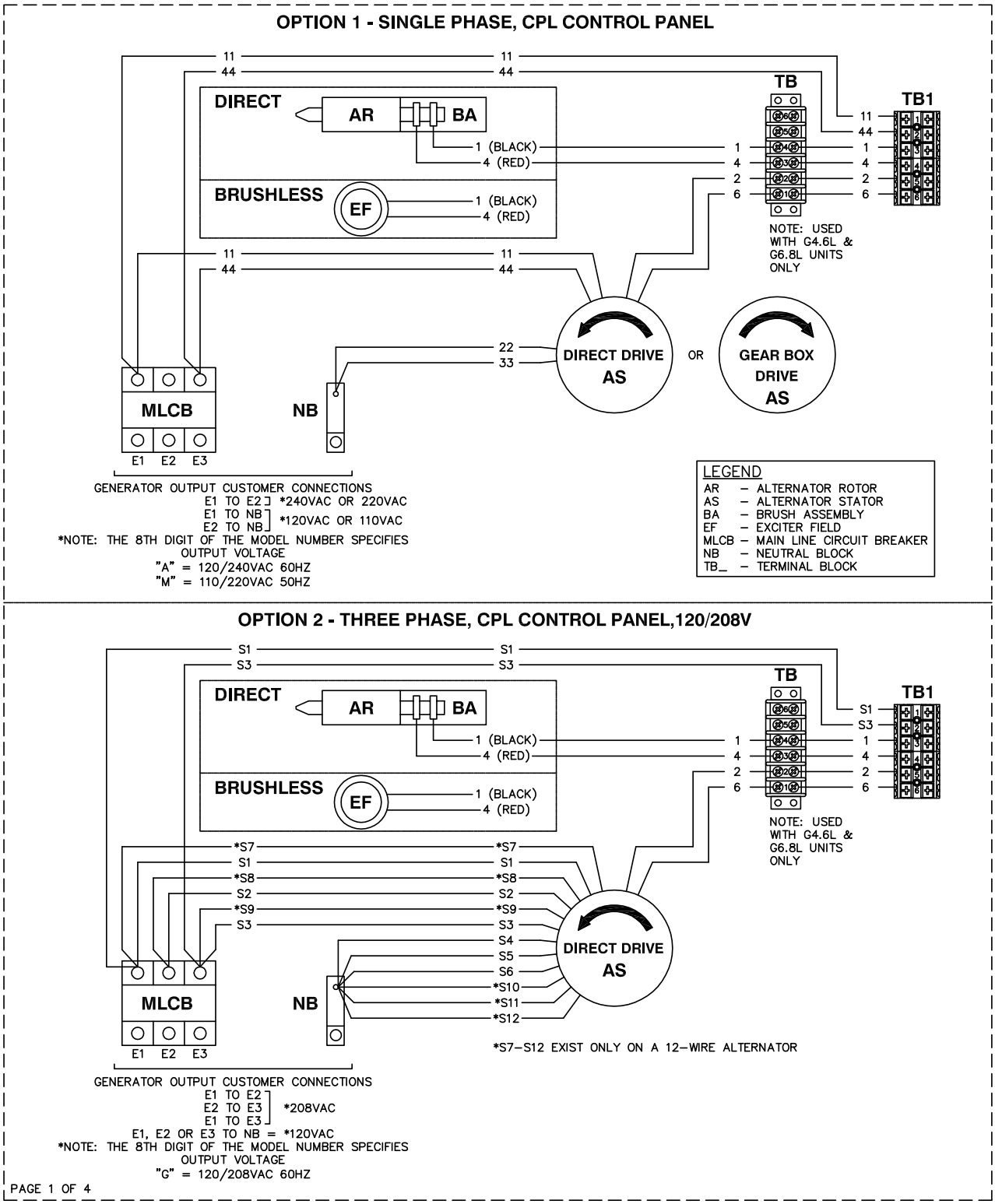

Alternator Wiring Diagram

(2 of 4)

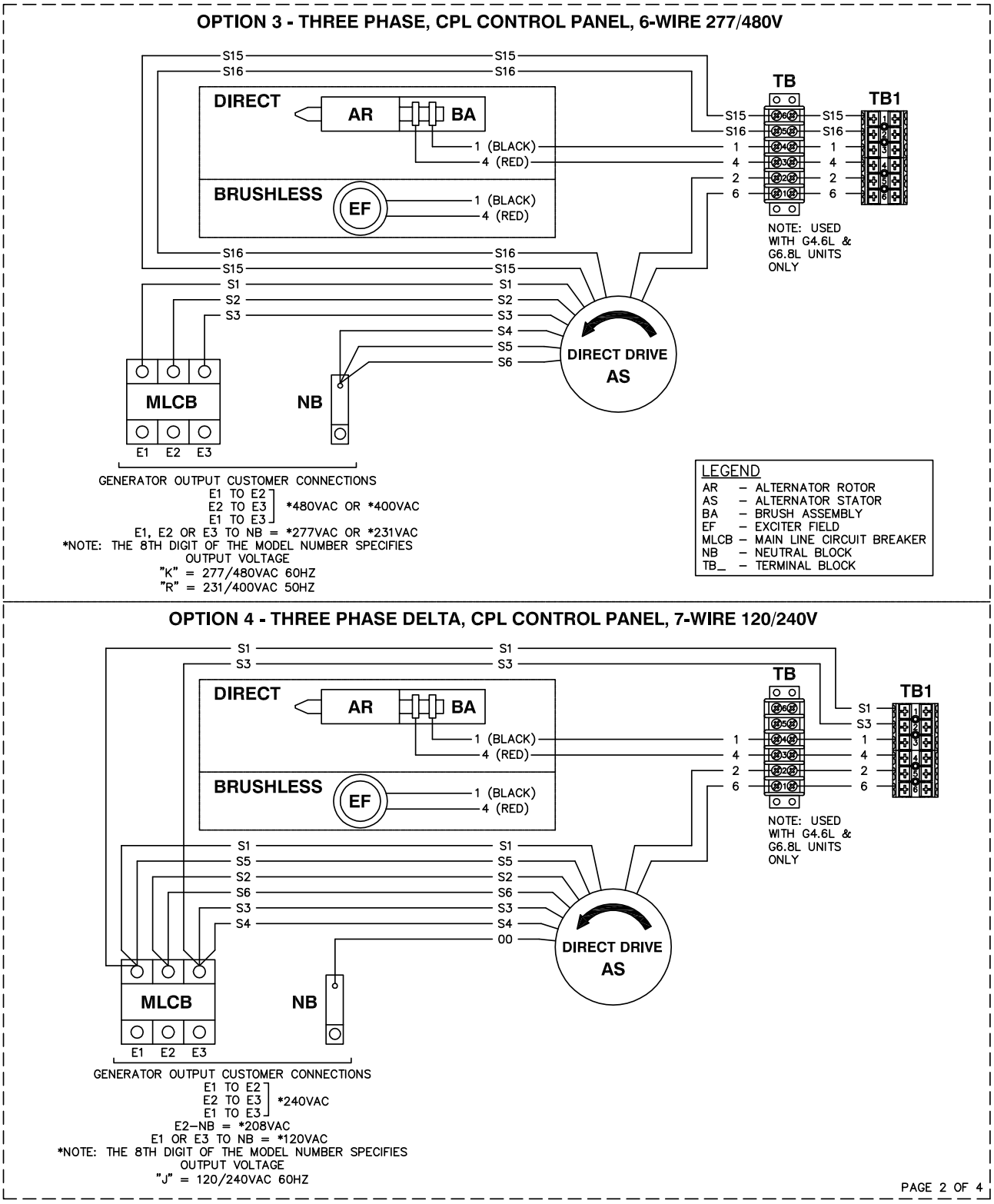

Alternator Wiring Diagram

(3 of 4)

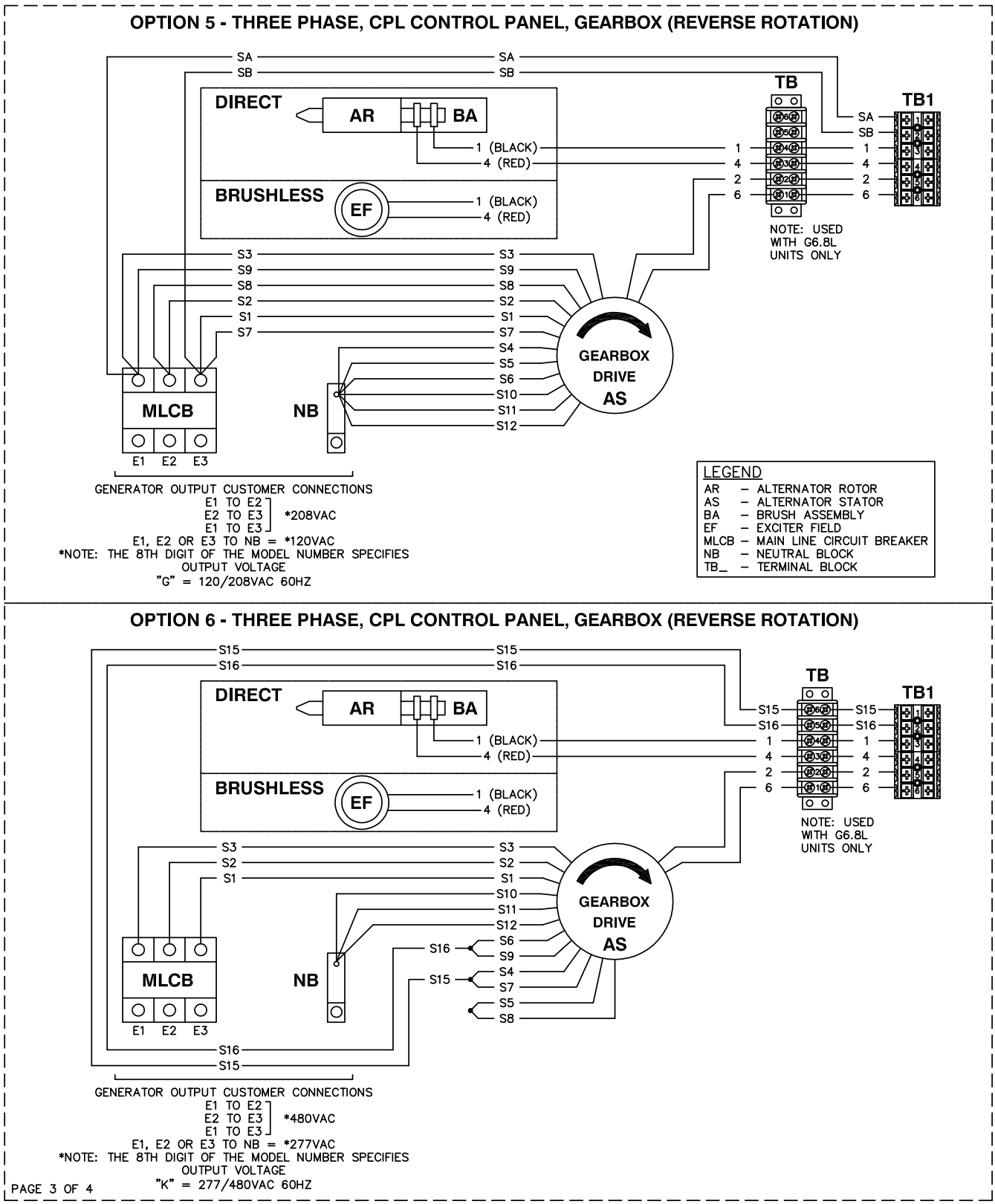

Alternator Wiring Diagram

(4 of 4)

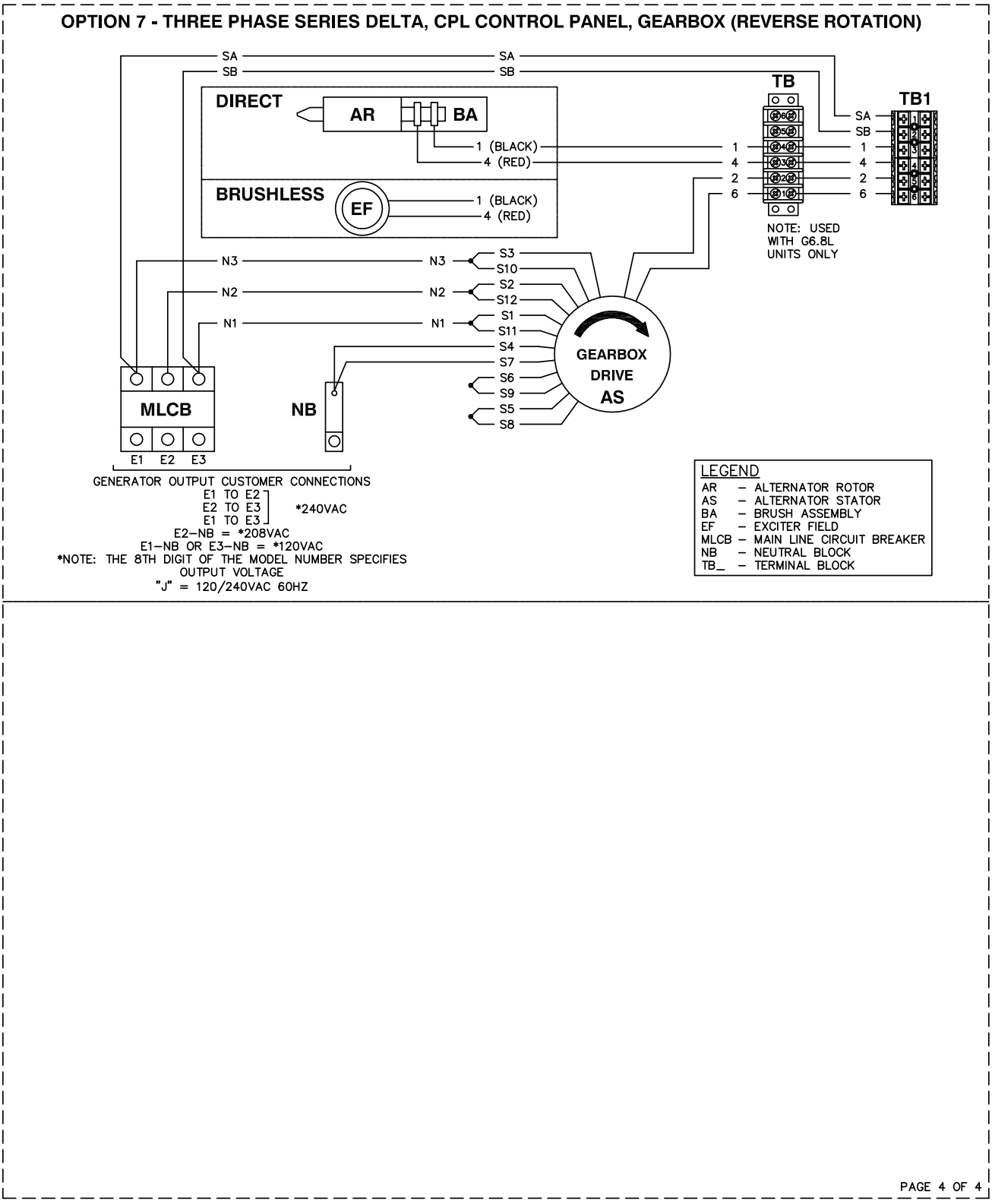

This page intentionally left blank.

This page intentionally left blank.

Part No. 0K8419 Rev. G 07/01/2020
©2020 Generac Power Systems, Inc.
All rights reserved.
Specifications are subject to change without notice.
No reproduction allowed in any form without prior written consent from Generac Power Systems, Inc.

Generac Power Systems, Inc.
S45 W29290 Hwy. 59
Waukesha, WI 53189
1-888-GENERAC (1-888-436-3722)
www.generac.com