0K9495

SCHEMATIC – DIAGRAM

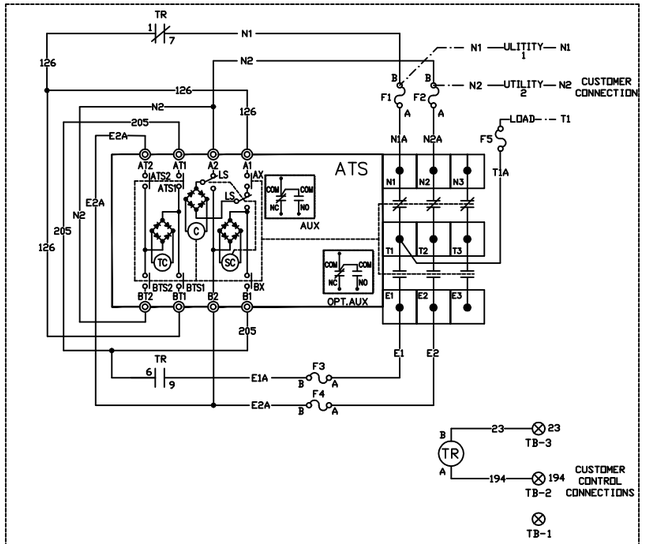

COLOR CHART	
WIRE	WIRE COLOR
23	WHITE
126	ORANGE
194	RED
205	VIOLET
E1A	BROWN
E2A	BROWN/WHITE
N1A	YELLOW
N2A	YELLOW/BLACK
T1A	BLUE

LEGEND	
ATS	TRANSFER SWITCH CONTACTOR
C	CONTACTOR ACTUATING COIL
F1,F2	FUSE, 5A SENSING & SWITCH OPERATION
F3,F4	FUSE, 5A SWITCH OPERATION
F5	FUSE, 5A LOAD SHED DEVICE SUPPLY
TB	TERMINAL STRIP (CUSTOMER CONNECTION)
TR	RELAY, TRANSFER
SC	COIL, SELECTIVE
TC	COIL, TRIP

NOTES:

1.) ALL CONTACTS SHOWN WITH TRANSFER SWITCH IN UTILITY POSITION.

WIRING – DIAGRAM

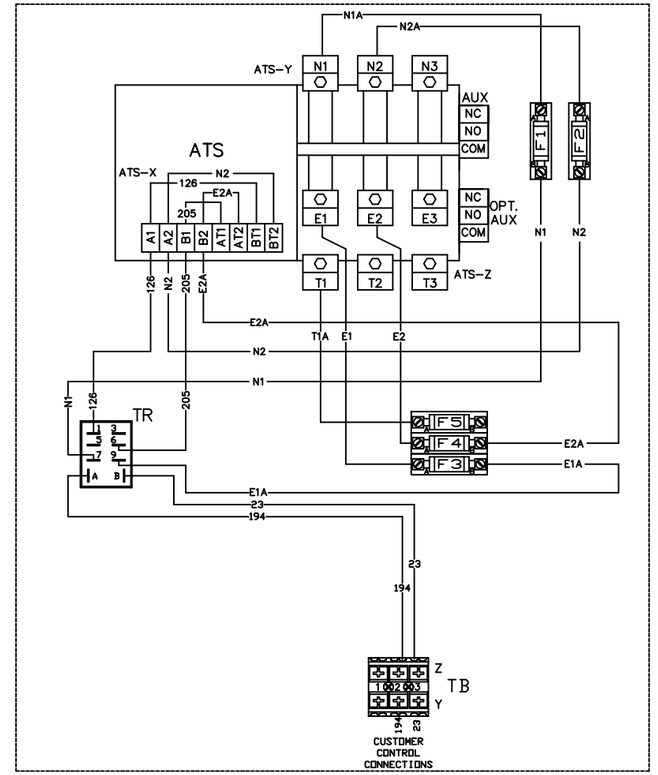

REV		
03/04	"A"	RELEASED FOR PRODUCTION
02/05	K-1840-B	REVISED AUX CONTACTS

DO NOT SCALE

MACHINE TITLE: SD/WD 600-800A XFER SV RTS 2014 1 Ø

GENERAC POWER SYSTEMS, INC. WAUKESHA, WI. 53187

CAD: 0K9495.DWG

SCALE: 1 = 1

SIZE: D

DRN: GDV | DATE: 03/29/14 | MFG: N/A | APPD: N/A

DWG NO: 0K9495

REV: B

GROUP G

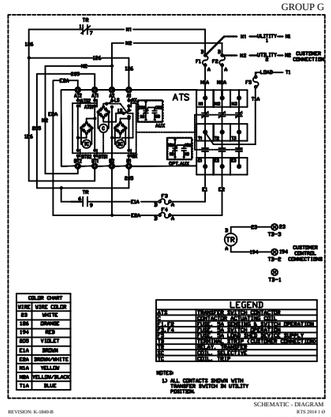

REVISION: K-1840-B
DATE: 02/20/15

SCHEMATIC - DIAGRAM
RTS 2014 1 Ø
DRAWING #: 0K9495

GROUP G

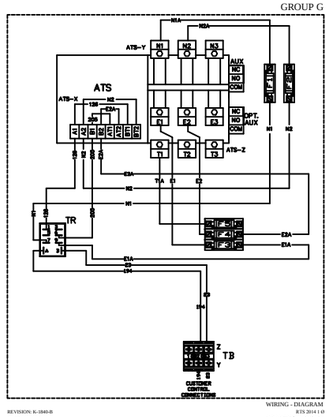

REVISION: K-1840-B
DATE: 02/20/15

WIRING - DIAGRAM
RTS 2014 1 Ø
DRAWING #: 0K9495