Installation Guidelines

60 Hz Air-Cooled Generators

16kW and 22 kW

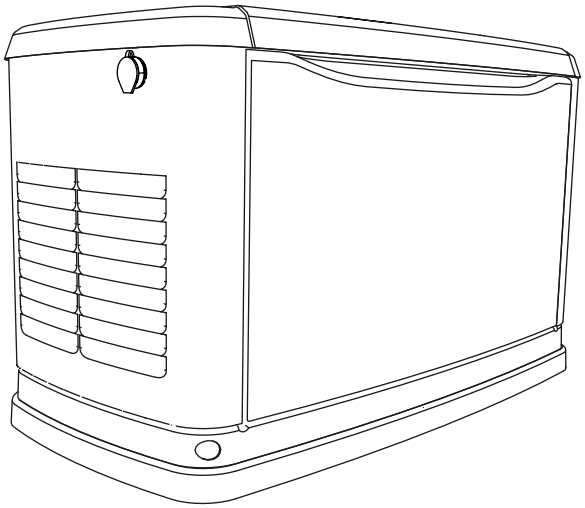

WARNING

Loss of life. This product is not intended to be used in a critical life support application. Failure to adhere to this warning could result in death or serious injury. (000209b)

Register your Generac product at:
WWW.GENERAC.COM
1-888-GENERAC
(888-436-3722)

Para español, visita: http://www.generac.com/service-support/product-support-lookup
Pour le français, visiter : http://www.generac.com/service-support/product-support-lookup

SAVE THIS MANUAL FOR FUTURE REFERENCE

Use this page to record important information about your generator set.

Model:	
Serial:	
Prod Date Week:	
Volts:	
LPV Amps:	
NG Amps:	
Hz:	
Phase:	
Controller P/N:	

Record the information found on your unit data label on this page. For the location of the unit data label, see your owner's manual. The unit has a label plate affixed to the inside partition, to the left of the control panel console.

When contacting an Independent Authorized Service Dealer (IASD) about parts and service, always supply the complete model and serial numbers of the unit.

Operation and Maintenance: Proper maintenance and care of the generator ensures a minimum number of problems and keeps operating expenses at a minimum. It is the operator's responsibility to perform all safety checks, to make sure that all maintenance for safe operation is performed promptly, and to have the equipment checked periodically by an IASD. Normal maintenance, service, and replacement of parts are the responsibility of the owner/operator and are not considered defects in materials or workmanship within the terms of the warranty. Individual operating habits and usage may contribute to the need for additional maintenance or service.

When the generator requires servicing or repairs, Generac recommends contacting an Independent Authorized Service Dealer for assistance. Authorized service technicians are factory–trained and are capable of handling all service needs.To locate the nearest Independent Authorized Service Dealer, please visit the dealer locator at:

www.generac.com/Service/DealerLocator/.

⚠WARNING

Operating, servicing and maintaining this equipment can expose you to chemicals including engine exhaust, carbon monoxide, phthalates, and lead, which are known to the State of California to cause cancer and birth defects or other reproductive harm. To minimize exposure, avoid breathing exhaust, do not idle the engine except as necessary, service your equipment in a well-ventilated area and wear gloves or wash your hands frequently when servicing your equipment. For more information go to www.P65Warnings.ca.gov. (000393)

Table of Contents

Section 1: Safety Rules & General Information

Introduction 1
- Read This Manual Thoroughly 1
- How to Obtain Service 1

Safety Rules 2
- General Hazards 2
- Exhaust Hazards 3
- Electrical Hazards 3
- Fire Hazards 4
- Explosion Hazards 4

General Rules 5
- Before You Begin 5
- NEC Requirements 5
- Standards Index 5

Section 2: Unpacking and Inspection

General 7

Required Tools 7

Unpacking 7
- Intake Side Panel Removal 9

Rear Connections 9

Generator Main Line Circuit Breaker 10

Parts Shipped Loose 10

Section 3: Site Selection and Preparation

Site Selection 11
- Installation Guidelines for Stationary Air-Cooled Generators 12
- Annex A — Explanatory Material 12

Site Preparation 13
- Material Sufficient for Level Installation 13
- Transportation Recommendations 14

Placement on Roofs, Platforms, and Other Supporting Structures 14

Section 4: Generator Placement

Generator Placement 15

Fascia Installation (If Applicable) 16

Section 5: Fuel Conversion / Gas Connections

Fuel Requirements and Recommendations ... 17

Fuel Conversion 17

Fuel Consumption 18

Fuel Line Sizing 18
- Natural Gas Pipe Sizing 19
- LP Vapor Pipe Sizing 19

Installing and Connecting Gas Lines 20
- Shutoff Valve 20
- Flexible Fuel Line 20
- Sediment Trap 20

Checking Gas Line Connections 21

Perform Leak Test 21

Natural Gas Vapor Installation (typical) 22

LP Vapor Installation (typical) 23

Section 6: Electrical Connections

Generator Connections 25

Control Wiring 26

Main AC Wiring 27

Service Entrance Decals 27

Common Alarm Relay (Option) 27

Battery Requirements 28

Battery Installation 28

Battery Disposal 28

Section 7: Control Panel Start-Up/Testing

Control Panel Interface 29
Using the AUTO/MANUAL/OFF Buttons 29
Generator Setup 29
Activation 29
Cold Smart Start 31
Setting The Exercise Timer 31
Before Initial Start-up 32
Installation Wizard 32
Interconnect System Self Test Feature 32
Before starting, complete the following: 32
Check Manual Transfer Switch Operation 33
Electrical Checks 34
Generator Tests Under Load 34
Checking Automatic Operation 35
Installation Summary 35
Shutting Generator Down While Under Load ..35
To turn the generator OFF
(while running in AUTO and online): 35
To turn the generator back ON: 35
Shutting Generator Down To Perform Maintenance 35
To turn the generator back ON: 35

Section 8: Troubleshooting

System Diagnosis 37

Section 9: Quick Reference Guide

System Diagnosis 39

Section 10: Accessories

Section 11: Diagrams

Installation Drawing (10000002487—1 of 2) 43
Installation Drawing (10000002487—2 of 2) 44

Section 1: Safety Rules & General Information

Introduction

Thank you for purchasing this compact, high performance, air-cooled, engine-driven generator. It is designed to automatically supply electrical power to operate critical loads during a utility power failure.

This unit is factory installed in an all-weather, metal enclosure that is intended exclusively for outdoor installation. This generator will operate using either vapor withdrawn liquid propane (LP) or natural gas (NG).

NOTE: When sized properly, this generator is suitable for supplying typical residential loads such as induction motors (sump pumps, refrigerators, air conditioners, furnaces, etc.), electronic components (computer, monitor, TV, etc.), lighting loads, and microwaves.

The information in this manual is accurate based on products produced at the time of publication. The manufacturer reserves the right to make technical updates, corrections, and product revisions at any time without notice.

Read This Manual Thoroughly

WARNING

Consult Manual. Read and understand manual completely before using product. Failure to completely understand manual and product could result in death or serious injury. (000100a)

If any portion of this manual is not understood, contact the nearest Independent Authorized Service Dealer (IASD) for starting, operating, and servicing procedures.

This manual must be used in conjunction with the appropriate owner's manual.

SAVE THESE INSTRUCTIONS: The manufacturer suggests that this manual and the rules for safe operation be copied and posted near the unit installation site. Safety should be stressed to all operators and potential operators of this equipment.

Throughout this publication and on tags and decals affixed to the generator, DANGER, WARNING, and CAUTION blocks are used to alert personnel to special instructions about a particular operation that may be hazardous if performed incorrectly or carelessly. Observe them carefully. Their definitions are as follows:

DANGER

Indicates a hazardous situation which, if not avoided, will result in death or serious injury.

(000001)

WARNING

Indicates a hazardous situation which, if not avoided, could result in death or serious injury.

(000002)

CAUTION

Indicates a hazardous situation which, if not avoided, could result in minor or moderate injury.

(000003)

NOTE: Notes provide additional information important to a procedure or component.

Safety alerts cannot eliminate the hazards they indicate. Observing safety precautions and strict compliance with the special instructions while performing the action or service are essential to preventing accidents.

The operator is responsible for proper and safe use of the equipment. The manufacturer strongly recommends that if the operator is also the owner, to read the owner's manual and thoroughly understand all instructions before using this equipment. The manufacturer also strongly recommends instructing other users to properly start and operate the unit. This prepares them if they need to operate the equipment in an emergency.

How to Obtain Service

When the generator requires servicing or repairs, contact an IASD for assistance. Service technicians are factory-trained and are capable of handling all service needs.

When contacting an IASD about parts and service, always supply the complete model number and serial number of the unit as given on its data decal, which is located on the generator. Refer to owner's manual for decal location. Record the model and serial numbers in the spaces provided on the inside front cover of this manual.

Safety Rules

Study these SAFETY RULES carefully before installing, operating, or servicing this equipment. Become familiar with this installation manual, the owner's manual, and with the unit. The generator can operate safely, efficiently, and reliably only if it is properly installed, operated, and maintained. Many accidents are caused by failing to follow simple and fundamental rules or precautions.

The manufacturer cannot anticipate every possible circumstance that might involve a hazard. The alerts in this manual and on tags and decals affixed to the unit are not all-inclusive. If using a procedure, work method, or operating technique the manufacturer does not specifically recommend, verify that it is safe for others and does not render the generator unsafe.

General Hazards

⚠DANGER

Loss of life. Property damage. Installation must always comply with applicable codes, standards, laws and regulations. Failure to do so will result in death or serious injury.

(000190)

⚠DANGER

Automatic start-up. Disconnect utility power and render unit inoperable before working on unit. Failure to do so will result in death or serious injury.

(000191)

⚠WARNING

Electrocution. Potentially lethal voltages are generated by this equipment. Render the equipment safe before attempting repairs or maintenance. Failure to do so could result in death or serious injury.

(000187)

⚠WARNING

Loss of life. This product is not intended to be used in a critical life support application. Failure to adhere to this warning could result in death or serious injury.

(000209b)

⚠WARNING

Accidental Start-up. Disconnect the negative battery cable, then the positive battery cable when working on unit. Failure to do so could result in death or serious injury.

(000130)

⚠WARNING

Equipment damage. Only qualified service personnel may install, operate, and maintain this equipment. Failure to follow proper installation requirements could result in death, serious injury, and equipment or property damage.

(000182a)

⚠WARNING

Equipment damage. This unit is not intended for use as a prime power source. It is intended for use as an intermediate power supply in the event of temporary power outage only. Doing so could result in death, serious injury, and equipment damage.

(000247a)

⚠WARNING

Electric shock. Only a trained and licensed electrician should perform wiring and connections to unit. Failure to follow proper installation requirements could result in death, serious injury, and equipment or property damage.

(000155a)

⚠WARNING

Moving Parts. Do not wear jewelry when starting or operating this product. Wearing jewelry while starting or operating this product could result in death or serious injury.

(000115)

⚠WARNING

Moving Parts. Keep clothing, hair, and appendages away from moving parts. Failure to do so could result in death or serious injury.

(000111)

⚠WARNING

Hot Surfaces. When operating machine, do not touch hot surfaces. Keep machine away from combustibles during use. Hot surfaces could result in severe burns or fire.

(000108)

⚠WARNING

Equipment and property damage. Do not alter construction of, installation, or block ventilation for generator. Failure to do so could result in unsafe operation or damage to the generator.

(000146)

⚠WARNING

Risk of injury. Do not operate or service this machine if not fully alert. Fatigue can impair the ability to service this equipment and could result in death or serious injury.

(000215)

WARNING

Environmental Hazard. Always recycle batteries at an official recycling center in accordance with all local laws and regulations. Failure to do so could result in environmental damage, death or serious injury. (000228)

WARNING

Injury and equipment damage. Do not use generator as a step. Doing so could result in falling, damaged parts, unsafe equipment operation, and could result in death or serious injury. (000216)

- Inspect the generator regularly, and contact the nearest IASD for parts needing repair or replacement.

Exhaust Hazards

DANGER

Asphyxiation. Running engines produce carbon monoxide, a colorless, odorless, poisonous gas. Carbon monoxide, if not avoided, will result in death or serious injury. (000103)

WARNING

Equipment and property damage. Do not alter construction of, installation, or block ventilation for generator. Failure to do so could result in unsafe operation or damage to the generator. (000146)

WARNING

Asphyxiation. Always use a battery operated carbon monoxide alarm indoors and installed according to the manufacturer's instructions. Failure to do so could result in death or serious injury. (000178a)

- The generator must be installed and operated outdoors only.

Electrical Hazards

DANGER

Electrocution. Contact with bare wires, terminals, and connections while generator is running will result in death or serious injury. (000144)

DANGER

Electrocution. Never connect this unit to the electrical system of any building unless a licensed electrician has installed an approved transfer switch. Failure to do so will result in death or serious injury. (000150)

DANGER

Electrical backfeed. Use only approved switchgear to isolate generator from the normal power source. Failure to do so will result in death, serious injury, and equipment damage. (000237)

DANGER

Electrocution. Verify electrical system is properly grounded before applying power. Failure to do so will result in death or serious injury. (000152)

DANGER

Electrocution. Do not wear jewelry while working on this equipment. Doing so will result in death or serious injury. (000188)

DANGER

Electrocution. Water contact with a power source, if not avoided, will result in death or serious injury. (000104)

DANGER

Electrocution. In the event of electrical accident, immediately shut power OFF. Use non-conductive implements to free victim from live conductor. Apply first aid and get medical help. Failure to do so will result in death or serious injury. (000145)

Fire Hazards

WARNING

Fire hazard. Do not obstruct cooling and ventilating airflow around the generator. Inadequate ventilation could result in fire hazard, possible equipment damage, death or serious injury. (000217)

WARNING

Fire and explosion. Installation must comply with all local, state, and national electrical building codes. Noncompliance could result in unsafe operation, equipment damage, death or serious injury. (000218)

WARNING

Fire hazard. Use only fully-charged fire extinguishers rated “ABC” by the NFPA. Discharged or improperly rated fire extinguishers will not extinguish electrical fires in automatic standby generators. (000219)

WARNING

Consult Manual. Read and understand manual completely before using product. Failure to completely understand manual and product could result in death or serious injury. (000100a)

WARNING

Electrocution. Refer to local codes and standards for safety equipment required when working with a live electrical system. Failure to use required safety equipment could result in death or serious injury. (000257)

WARNING

Risk of Fire. Unit must be positioned in a manner that prevents combustible material accumulation underneath. Failure to do so could result in death or serious injury. (000147)

- Comply with regulations the Occupational Safety and Health Administration (OSHA) has established. Verify that the generator is installed in accordance with the manufacturer’s instructions and recommendations. Following proper installation, do nothing that might alter a safe installation and render the unit in noncompliance with the aforementioned codes, standards, laws, and regulations.

Explosion Hazards

DANGER

Explosion and fire. Fuel and vapors are extremely flammable and explosive. No leakage of fuel is permitted. Keep fire and spark away. Failure to do so will result in death or serious injury. (000192)

DANGER

Explosion and fire. Connection of fuel source must be completed by a qualified professional technician or contractor. Incorrect installation of this unit will result in death, serious injury, and property and equipment damage. (000151a)

DANGER

Risk of fire. Allow fuel spills to completely dry before starting engine. Failure to do so will result in death or serious injury. (000174)

WARNING

Risk of Fire. Hot surfaces could ignite combustibles, resulting in fire. Fire could result in death or serious injury. (000110)

General Rules

DANGER

Loss of life. Property damage. Installation must always comply with applicable codes, standards, laws and regulations. Failure to do so will result in death or serious injury. (000190)

DANGER

Electrical backfeed. Use only approved switchgear to isolate generator from the normal power source. Failure to do so will result in death, serious injury, and equipment damage. (000237)

WARNING

Equipment damage. Only qualified service personnel may install, operate, and maintain this equipment. Failure to follow proper installation requirements could result in death, serious injury, and equipment or property damage. (000182a)

WARNING

Electrocution. Refer to local codes and standards for safety equipment required when working with a live electrical system. Failure to use required safety equipment could result in death or serious injury. (000257)

- Follow all safety precautions in the owner's manual, installation guidelines manual, and other documents included with your equipment.
- Never energize a new system without opening all disconnects and breakers.
- Always consult your local code for additional requirements for the area in which the unit is being installed.
- Improper installation can result in personal injury and damage to the generator. It may also result in the warranty being suspended or voided. All the instructions listed below must be followed including location clearances and pipe sizes.

Before You Begin

- Contact the local inspector or city hall to be aware of all federal, state, and local codes that could impact the installation. Secure all required permits before starting the install.
- Carefully read and follow all of the procedures and safety precautions detailed in the installation guide. If any portion of the installation manual, technical manual, or other factory-supplied documents is not completely understood, contact an IASD for assistance.
- Fully comply with all relevant NEC, NFPA, and OSHA standards, as well as all federal, state, and local building and electric codes. As with any generator, this unit must be installed in accordance with current NFPA 37 and NFPA 70 standards, as well as any other federal, state, and local codes for minimum distances from other structures.
- Verify the capacity of the natural gas meter or the LP tank in regards to providing sufficient fuel for both the generator and other household and operating appliances.

NEC Requirements

Local code enforcement may require that Arc Fault Circuit Interrupters (AFCIs) be incorporated into the transfer switch distribution panel.

Standards Index

WARNING

Loss of life. This product is not intended to be used in a critical life support application. Failure to adhere to this warning could result in death or serious injury. (000209b)

- Strictly comply with all applicable national, state, and local laws, as well as codes or regulations pertaining to the installation of this engine-generator power system. Use the most current version of applicable codes or standards relevant to the local jurisdiction, generator used, and installation site.

NOTE: Not all codes apply to all products and this list is not all-inclusive. In the absence of pertinent local laws and standards, the following publications may be used as a guide (these apply to localities which recognize NFPA and IBC).

1. National Fire Protection Association (NFPA) 70: The NATIONAL ELECTRIC CODE (NEC) *
2. NFPA 10: Standard for Portable Fire Extinguishers *
3. NFPA 30: Flammable and Combustible Liquids Code *
4. NFPA 37: Standard for Stationary Combustion Engines and Gas Turbines *
5. NFPA 54: National Fuel Gas Code *
6. NFPA 58: Standard for Storage and Handling Of Liquefied Petroleum Gases *
7. NFPA 68: Standard On Explosion Protection By Deflagration Venting *
8. NFPA 70E: Standard For Electrical Safety In The Workplace *
9. NFPA 110: Standard for Emergency and Standby Power Systems *

10. NFPA 211: Standard for Chimneys, Fireplaces, Vents, and Solid Fuel Burning Appliances *
11. NFPA 220: Standard on Types of Building Construction *
12. NFPA 5000: Building Code *
13. International Building Code **
14. Agricultural Wiring Handbook ***
15. Article X, NATIONAL BUILDING CODE
16. ASAE EP-364.2 Installation and Maintenance of Farm Standby Electric Power ****
17. ICC:IFGC

This list is not all-inclusive. Check with the Authority Having Local Jurisdiction (AHJ) for any local codes or standards which may be applicable to your jurisdiction. The above listed standards are available from the following internet sources:

* ***www.nfpa.org***

** ***www.iccsafe.org***

*** ***www.rerc.org*** Rural Electricity Resource Council P.O. Box 309 Wilmington, OH 45177-0309

**** ***www.asabe.org*** American Society of Agricultural & Biological Engineers 2950 Niles Road, St. Joseph, MI 49085

Section 2: Unpacking and Inspection

General

NOTE: Carefully inspect the contents for damage after unpacking. It is advised to unpack and inspect the unit immediately upon delivery to detect any damage that may have occurred in transit. Any claims for shipping damage need to be filed as soon as possible with the freight carrier. This is especially important if the generator will not be installed for a period of time.

- This standby generator set is ready for installation with a factory supplied and pre-mounted base pad and has a weather protective enclosure that is intended for outdoor installation only.
- If any loss or damage is noted at time of delivery, have the person(s) making the delivery note all damage on the freight bill or affix their signature under the consignor's memo of loss or damage.
- If a loss or damage is noted after delivery, separate the damaged materials and contact the carrier for claim procedures.
- "Concealed damage" is understood to mean damage to the contents of a package that is not evident at the time of delivery, but is discovered later.

Required Tools

- General SAE and Metric hand tools
  - Wrenches
  - Sockets
  - Screwdrivers
- Standard electrician's hand tools
  - Drill and bits for mounting and routing conduits
- 4 mm Allen wrench (for access to customer connections)
- 3/16 in Allen wrench (test port on fuel regulator)
- Manometer (for fuel pressure checks)
- Meter capable of measuring AC/DC voltage and frequency
- Torque wrenches

Unpacking

1. Remove cardboard carton.
2. Remove the wood frame.

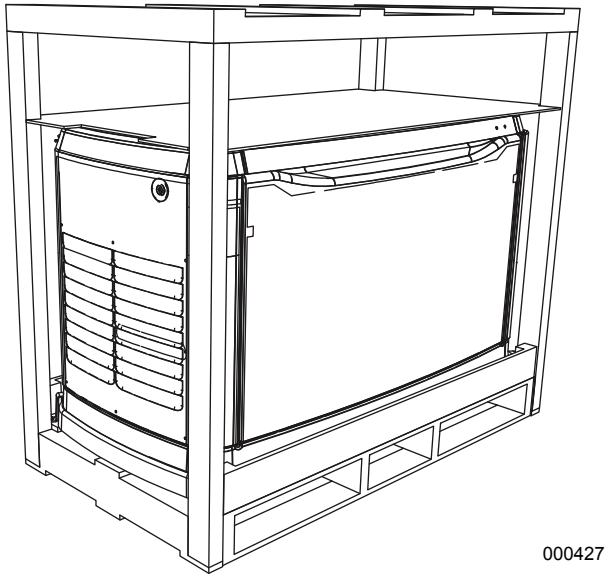

Figure 2-1. Crated Generator

3. See ***Figure 2-2***. Remove bolts and pallet brackets (A). Exercise caution when removing the generator. Dragging it off the pallet will damage the base. The generator must be lifted from the wooden pallet to remove.

   Bolts and pallet brackets are provided only for shipping purposes and can be discarded after removal.

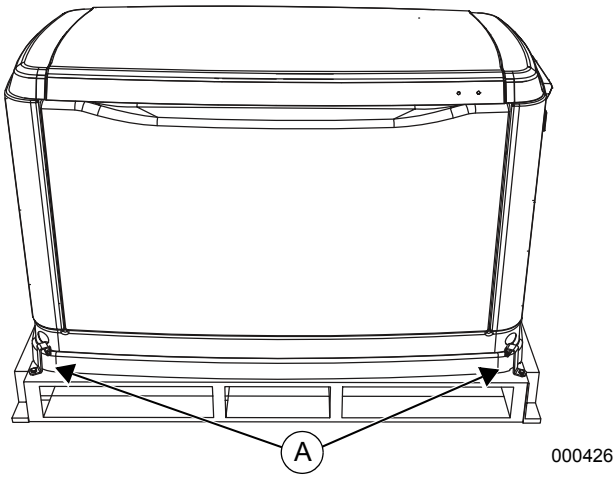

Figure 2-2. Generator on Pallet

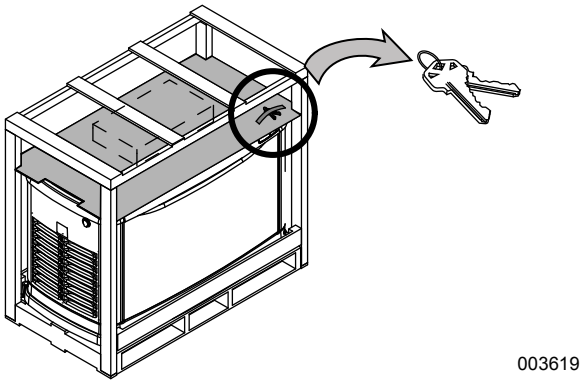

Figure 2-3. Keys As Shipped

The lid will be locked. A set of keys is taped to the cardboard on top of the generator on the intake side. See ***Figure 2-3***.

1. Cut the plastic bag to remove the keys.
2. Use the keys to open the lid of the generator.

NOTE: The enclosed keys provided with this unit are intended for service personnel use only.

3. Two locks secure the lid; one on each side (A in ***Figure 2-4***). Press down on the lid above the side lock, and unlock the latch to properly open the lid.
4. Repeat for the other side. The lid may appear stuck if pressure is not applied from the top.

NOTE: Always verify that the side locks are unlocked before attempting to lift the lid.

5. Remove the front access panel by lifting it straight up and out once the lid is open.

NOTE: Always lift the front access panel straight up before pulling away from enclosure (B and C in ***Figure 2-4***). Do not pull the panel away from the enclosure before lifting up (D in ***Figure 2-4***).

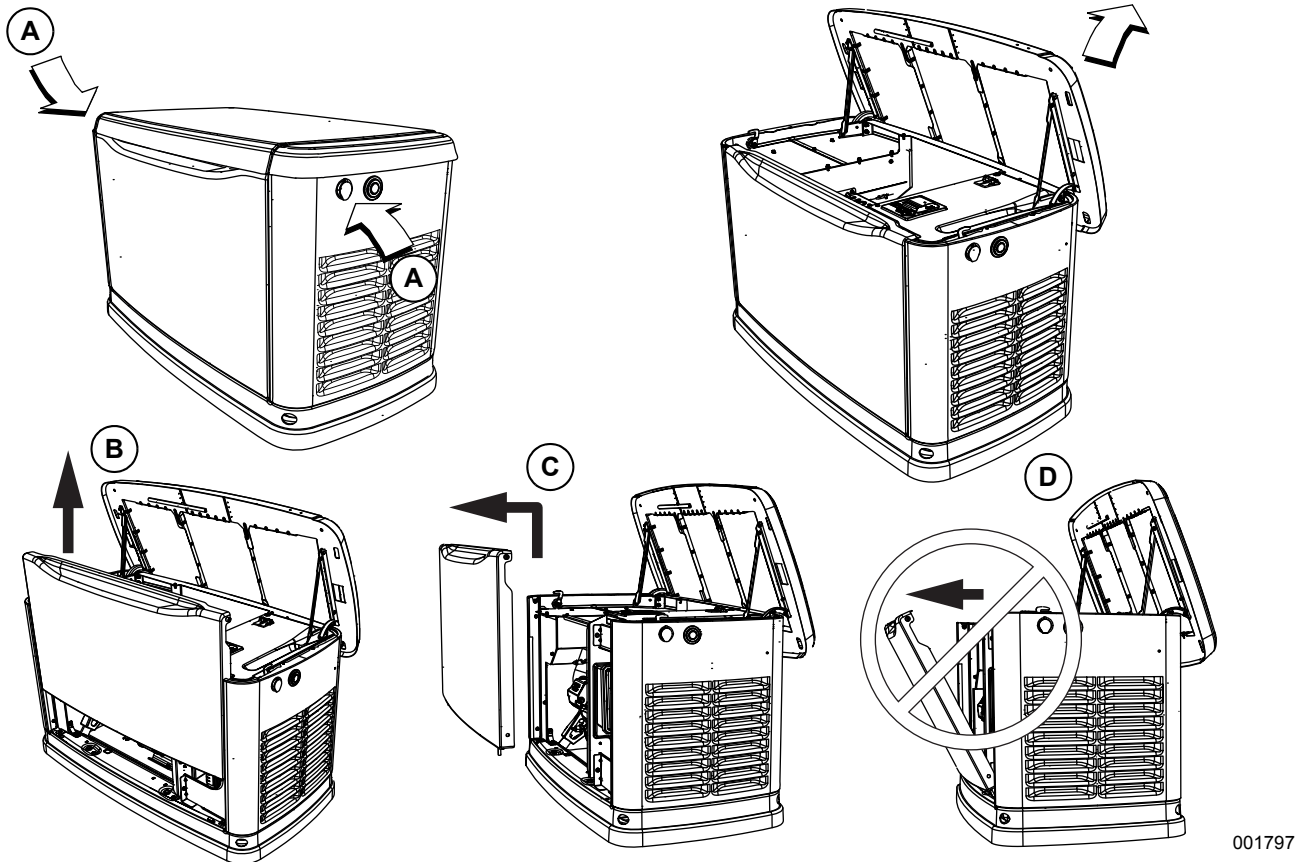

Figure 2-4. Side Lock Location and Front Panel Removal

Intake Side Panel Removal

See ***Figure 2-5***. The intake side panel (A) must be removed to access the battery compartment, fuel regulator, and sediment trap.

1. Raise the lid and remove the front panel.
2. Use an Allen wrench to remove two mounting screws (B) and the L-bracket screw (C).
3. Lift the intake panel up and away from the generator.

NOTE: Always lift the intake side panel straight up before pulling away from enclosure. Do not pull the panel away from the enclosure before lifting up (D).

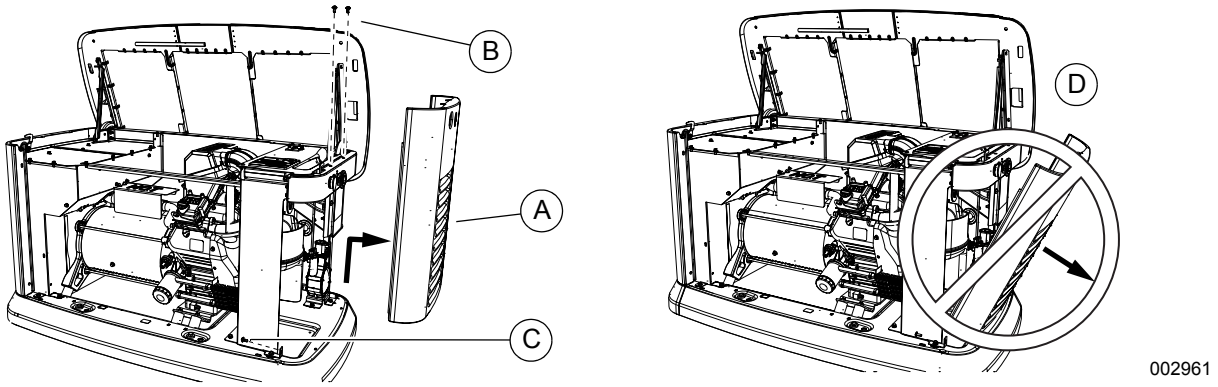

Figure 2-5. Intake Side Panel Removal

1. Perform a visual inspection for any hidden freight damage. Contact the freight carrier if damage is present.
2. See ***Figure 2-6*** and ***Figure 2-7*** for customer connections and loose parts location. ***Figure 2-9*** illustrates parts shipped loose.

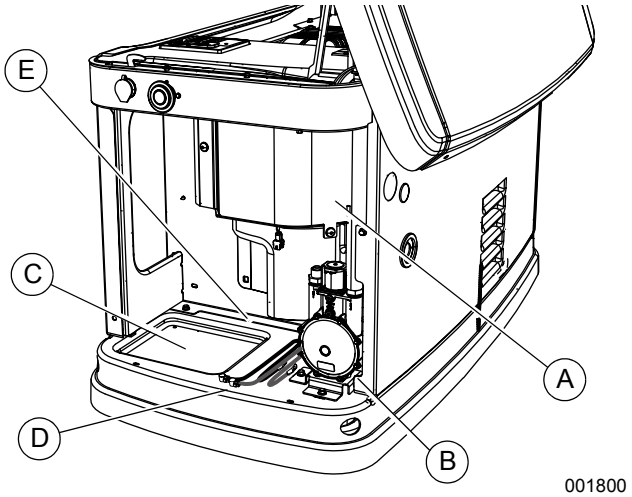

A	Customer electrical connection area (behind the access panel)
B	Fuel regulator with sediment trap
C	Battery compartment (battery not supplied)
D	Positive (+) and negative (-) battery cables
E	Location of “Loose Shipped Parts”

Figure 2-6. Customer Connection Area and Loose Parts Location

Rear Connections

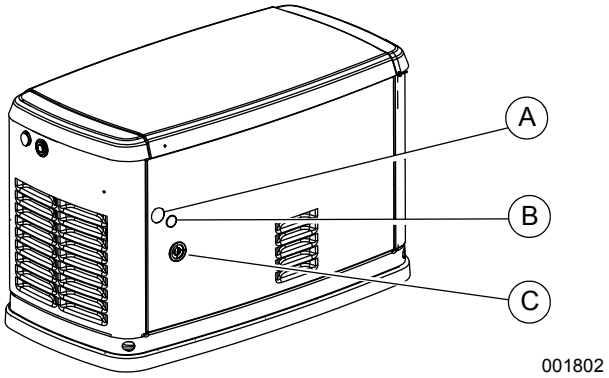

A	Main AC/Control wiring hole for 1-1/4 in conduit
B	Main AC/Control wiring hole for 3/4 in conduit
C	Fuel Connection hole

Figure 2-7. Rear Connections

Generator Main Line Circuit Breaker

This is a 2-pole circuit breaker (generator disconnect) rated according to relevant specifications. See “A” in *Figure 2-8*.

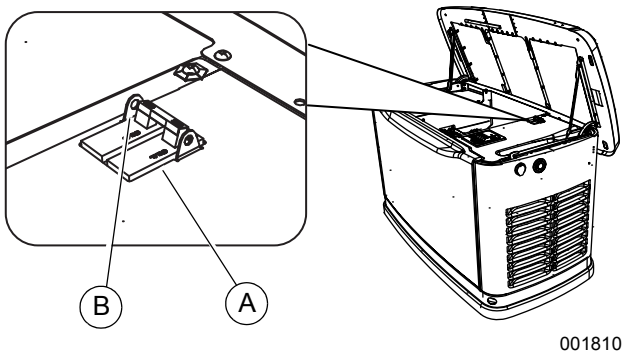

Figure 2-8. Generator Main Line Circuit Breaker

The breaker can be locked in the OFF (OPEN) position for security during maintenance or transfer switch service. Use an appropriately-sized padlock (not included) with a shackle long enough to pass through both lock tabs (B).

NOTE: DO NOT leave the breaker disconnect locked in the open (OFF) position during normal generator operation. Leaving the breaker in the open position will prevent the transfer of power to the generator from the transfer equipment during normal generator operation.

Parts Shipped Loose

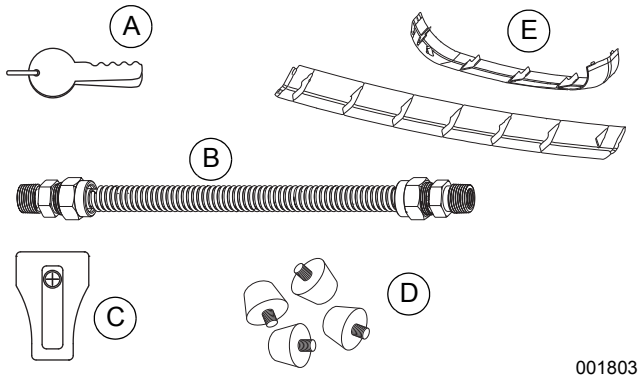

A	Keys
B	Flexible fuel line
C	Battery terminal cap
D	Rubber mounts (only for units that include fascia)
E	Fascia (if applicable)
F	Decal—Service entrance warning (not shown)
G	Decal—Through conductors warning (not shown)
H	Decal—Service disconnect (not shown)
J	Owner’s and Installation manuals (not shown)

Figure 2-9. Parts Shipped Loose

Section 3: Site Selection and Preparation

Site Selection

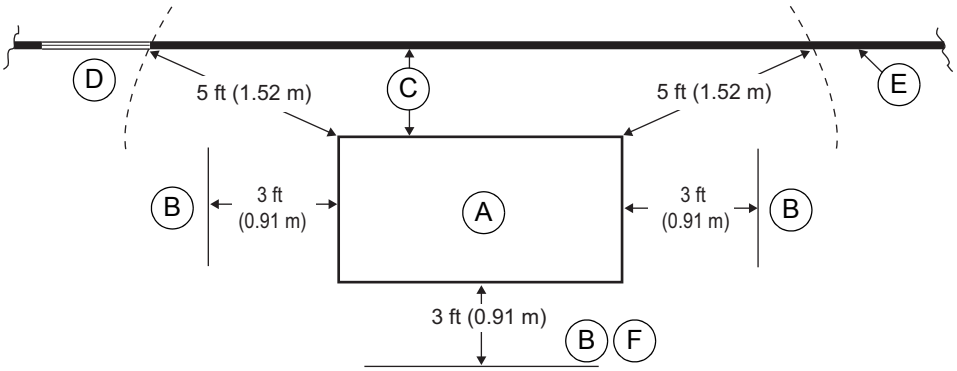

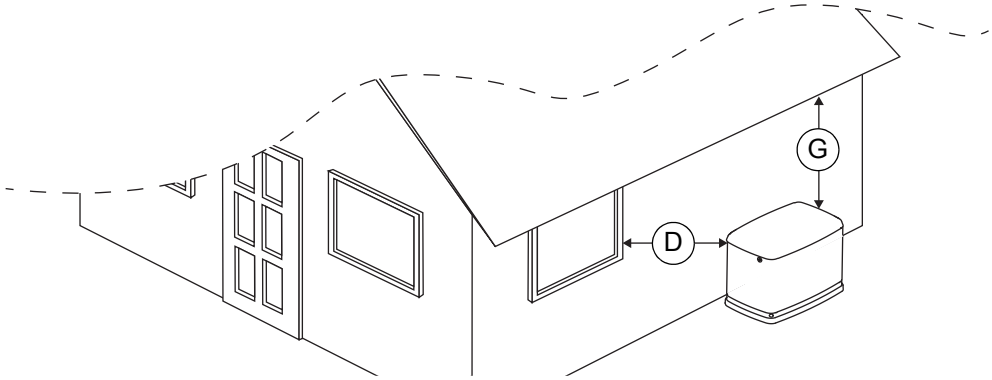

Figure 3-1. Installation Clearances

ID	Description	Comments
A	Top of generator	—
B	Front and end clearance	Minimum clear distances cannot include shrubs, bushes, or trees.
C	Rear clearance	18 in (45.7 cm) minimum clearance per SwRI testing, labeling, and listing, unless state or local codes dictate otherwise.
D	Windows and openings	No operable windows, doors, or openings in the wall are permitted within 5 ft (1.52 m) from any point of the generator.
E	Existing wall	One-hour fire rated walls allow closer placement of the generator set. Confirm before installation.
F	Removable fence	Removable fence panels for servicing cannot be placed less than 3 ft (0.91 m) in front of the generator.
G	Overhead clearance	5 ft (1.52 m) minimum distance from any structure, overhang, or projections from the wall. DO NOT install under wooden decks or structures unless this distance is maintained.

Install the generator set, in its protective enclosure, outdoors where adequate cooling and ventilating air is always available (***Figure 3-1***). Consider these factors:

- The installation of the generator must comply strictly with ICC IFGC, NFPA 37, NFPA 54, NFPA 58, and NFPA 70 standards.
- Install the unit where air inlet and outlet openings will not become obstructed by leaves, grass, snow, etc. If prevailing winds will cause blowing or drifting, consider using a windbreak to protect the unit.
- Install the generator on high ground where water levels will not rise and endanger it. This unit should not operate in or be subjected to standing water.
- Allow sufficient room on all sides of the generator for maintenance and servicing. This unit must be installed in accordance with any local, state, or national codes for minimum distances from other structures.
- Clearance from the ends and front of the generator must be 3 ft (0.91 m). This includes shrubs, bushes, and trees. Clearance from the back of the generator must be a minimum of 18 in (457 mm). Clearance at the top should be a minimum of 5 ft (1.52 m) from any structure, overhang, or projections from the wall.
- DO NOT install under wooden decks or structures unless there is at least 5 ft (1.52 m) of clearance above the generator.
- Install the unit where rain gutter down spouts, roof run-off, landscape irrigation, water sprinklers, or sump pump discharge does not flood the unit or spray the enclosure, including any air inlet or outlet openings.
- Install the unit where services will not be affected or obstructed, including concealed, underground, or covered services such as electrical, fuel, phone, air conditioning, or irrigation. This could affect warranty coverage.
- Where strong prevailing winds blow from one direction, face the generator air inlet openings to the prevailing winds.
- Install the generator as close as possible to the fuel supply to reduce the length of piping. REMEMBER THAT LAWS OR CODES MAY REGULATE THE DISTANCE AND LOCATION. In the absence of local codes regarding placement or clearance, we recommend following these guidelines:
  - Install the generator as close as possible to the transfer switch. REMEMBER THAT LAWS OR CODES MAY REGULATE THE DISTANCE AND LOCATION.
  - The generator must be installed on a level surface. The generator must be level within a 0.5 in (13 mm) all around.
  - The generator is typically placed on pea gravel, compacted soil, crushed stone, or a concrete pad. Check local codes to see what type is required. If a concrete pad is required, all applicable codes should be followed.

Installation Guidelines for Stationary Air-Cooled Generators

NFPA 37 is the The National Fire Protection Association's standard for the installation and use of stationary combustion engines. Its requirements limit the spacing of an enclosed generator set from a structure or wall (***Figure 3-1***).

NFPA 37, Section 4.1.4, Engines Located Outdoors: Engines, and their weatherproof housings if provided, that are installed outdoors shall be located at least 5 ft (1.52 m) from openings in walls and at least 5 ft (1.52 m) from structures having combustible walls. A minimum separation shall not be required where the following conditions exist:

1. The adjacent wall of the structure has a fire resistance rating of at least one hour.
2. The weatherproof enclosure is constructed of noncombustible materials and it has been demonstrated that a fire within the enclosure will not ignite combustible materials outside the enclosure.

Annex A — Explanatory Material

A4.1.4 (2) Means of demonstrating compliance are by means of full scale fire test or by calculation procedures.

Because of the limited spaces that are frequently available for installation, it has become apparent that exception (2) would be beneficial for many residential and commercial installations. With that in mind, the manufacturer contracted with an independent testing laboratory to run full scale fire tests to assure that the enclosure will not ignite combustible materials outside the enclosure.

NOTE: Southwest Research Institute testing approves 18 in (457 mm) installation minimum from structure (***Figure 3-1***, C). Southwest Research Institute is a nationally recognized third party testing and listing agency.

The criteria was to determine the worst case fire scenario within the generator and to determine the ignitability of items outside the engine enclosure at various distances. The enclosure is constructed of non-combustible materials, and the results and conclusions from the independent testing lab indicated that any fire within the

generator enclosure would not pose any ignition risk to nearby combustibles or structures, with or without fire service personnel response.

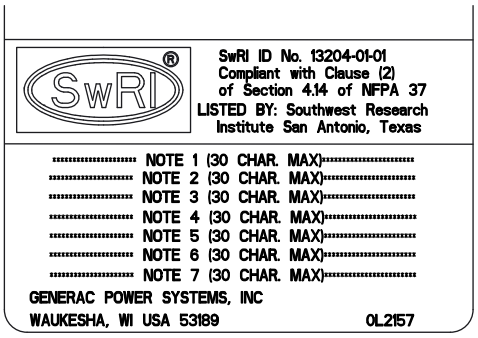

002158

Figure 3-2. Southwest Research Institute Marking

http://www.swri.org/4org/d01/fire/listlab/listprod/director.htm

Based on this testing and the requirements of NFPA 37, Sec 4.1.4.1.2, the guidelines for installation of the generators listed above are changed to 18 in (457 mm) from the back side of the generator to a stationary wall or building (C). For adequate maintenance and airflow clearance, the area above the generator should be at least 5 ft (1.52 m) with a minimum of 3 ft (0.91 m) at the front and ends of the enclosure. This includes trees, shrubs, and bushes. Vegetation not in compliance with these clearance parameters could obstruct air flow. In addition, exhaust fumes from the generator could inhibit plant growth. See ***Figure 3-1*** and the installation drawing within the owner's manual for details.

DANGER

Automatic start-up. Disconnect utility power and render unit inoperable before working on unit. Failure to do so will result in death or serious injury.

(000191)

DANGER

Asphyxiation. Running engines produce carbon monoxide, a colorless, odorless, poisonous gas. Carbon monoxide, if not avoided, will result in death or serious injury.

(000103)

NOTE: If the generator is not set to OFF, it can crank and start as soon as the battery cables are connected. If the utility power supply is not turned off, sparking can occur at the battery posts and cause an explosion.

Site Preparation

- Locate the mounting area as close as possible to the transfer switch and fuel supply.
- Leave adequate room around the area for service access (check local code), and place high enough to keep rising water from reaching the generator.
- Choose an open space that will provide adequate and unobstructed airflow.
- Place the unit so air vents won't become clogged with leaves, grass, snow, or debris. Verify that exhaust fumes will not enter any building through eaves, windows, ventilation fans, or other air intakes (see ***Site Selection***).
- Select the type of base, such as—but not limited to—compacted soil, gravel, or concrete, as desired or as required by local laws or codes. Verify your local requirements before selecting.

Material Sufficient for Level Installation

- Prepare a rectangular area approximately 5 in (127 mm) deep (A) and approximately 6 in (152 mm) longer and wider (B) than the footprint of the generator. Verify that the surface where the generator will be mounted is compacted, leveled, and will not erode over time. A concrete pad can be poured if desired or required.

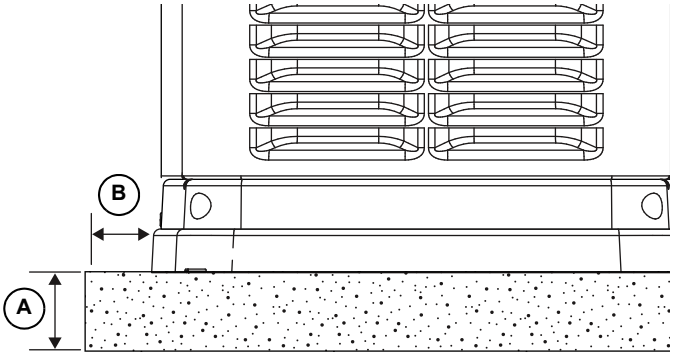

000856

Figure 3-3. Compacted Soil or Gravel Pad

NOTE: If a concrete pad is required, follow all applicable federal, state, or local codes.

Transportation Recommendations

Use a suitable cart or equipment to carry the generator, including the wooden pallet, to the installation site. Place cardboard between the hand cart and the generator to prevent any damage or scratches to the generator.

IMPORTANT NOTE: Do not lift, carry, or move the generator by grasping the louvers. Doing so may bend or damage the sheet metal.

Placement on Roofs, Platforms, and Other Supporting Structures

Where required to place the generator on a roof, platform, or other supporting structure, like a deck, the generator shall be placed in accordance with the requirements in NFPA 37, Section 4.1.3. The generator can be located 18 in (45.7 cm) from structures having combustible walls and 5 ft (1.52 m) from any operable opening in the structure. The surface beneath the generator and beyond shall be noncombustible to a minimum distance of 12 in (30.5 cm). Consult with the local Building Inspection Department or Fire Department to determine which noncombustible materials are approved for installation.

Section 4: Generator Placement

Generator Placement

All air-cooled generators come with a non-sinking direct to dirt (DTD) composite base pad. The DTD pad elevates the generator and helps prevent water from pooling around the base. (***Figure 4-1***).

The DTD pad allows the generator to be placed on three types of surfaces:

- directly on level, solid ground
- on 4 in (102 mm) of compacted pea gravel
- on a concrete pad

Check local codes to see what type of site base is required. If a concrete pad is required, all federal, state, and local codes should be followed. Place the generator, with the DTD pad attached, and position correctly as per the dimensional information given in ***Site Preparation***.

NOTE: Generator must be level within 0.5 in (13 mm).

NOTE: See ***Figure 4-2.*** DO NOT remove the DTD pad for mounting the generator to concrete. The pad is pre-drilled to accommodate mounting bolts.

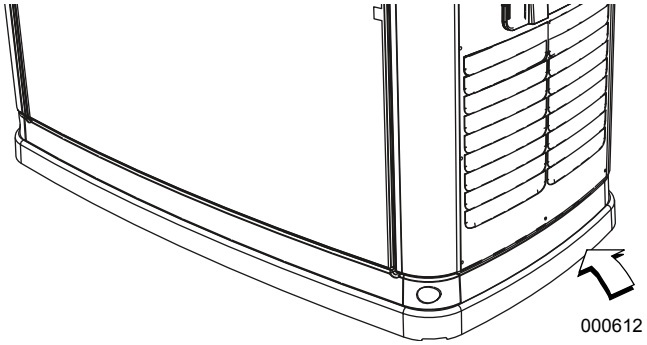

Figure 4-1. DTD Composite Pad

See ***Figure 4-2.*** Three mounting holes are available if codes require securing the generator to the concrete. Two holes are inside the front of the generator compartment, and one hole is in the back.

Three 3/8 in (or M10) lag bolts (not supplied) are recommended for securing the generator to a concrete pad.

NOTE: The top of the generator carton has a template that can be used to mark the concrete pad to pre-drill the mounting holes.

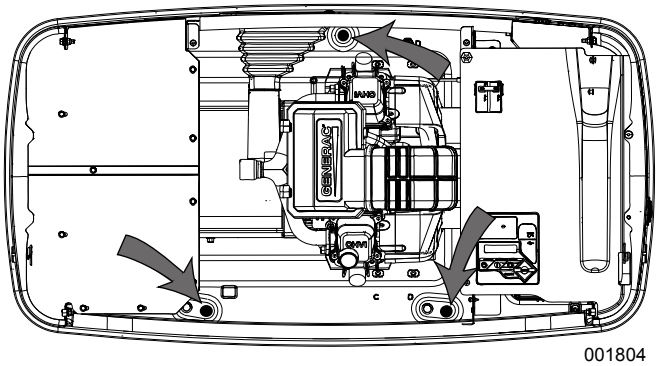

Figure 4-2. Mounting Hole Location

Fascia Installation (If Applicable)

- Locate the four threaded black rubber bumpers supplied with the loose parts.
- Remove the four rubber mounts from the bag and screw them into threaded holes located inside the end pieces of the fascia (two each) opposite one another (A).
- Once the mounts are installed, snap one of the end pieces into one of the front / rear pieces of fascia. Repeat this action with the other two remaining pieces of fascia.

NOTE: Do not assemble all four pieces together at this point (B).

- Place both assemblies at the base of the generator and fit the rubber mounts into the lifting holes in the generator base (C).
- Once aligned, snap together the two remaining connection points.

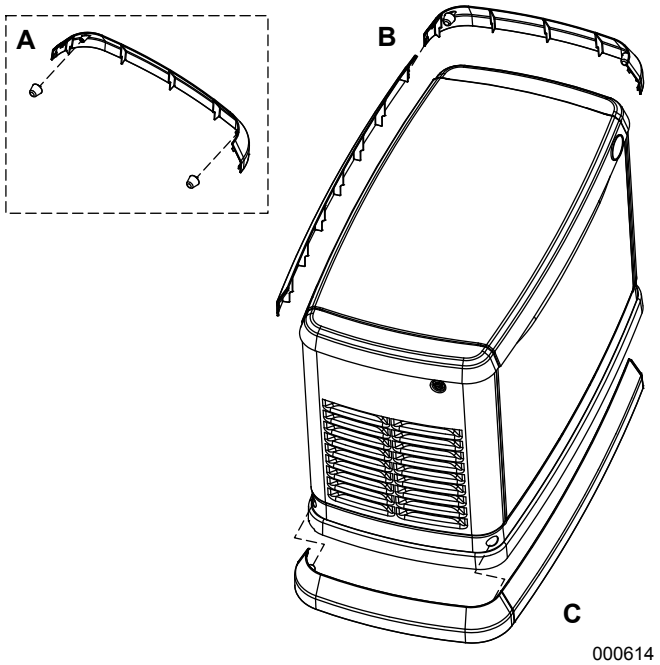

Figure 4-3. Fascia Installation

Section 5: Fuel Conversion / Gas Connections

Fuel Requirements and Recommendations

DANGER

Explosion and fire. Fuel and vapors are extremely flammable and explosive. No leakage of fuel is permitted. Keep fire and spark away. Failure to do so will result in death or serious injury. (000192)

NOTE: Natural gas is lighter than air and will collect in high areas. LP gas is heavier than air and will settle in low areas.

LP gas should only use a vapor withdrawal system. This type of system uses the vapors formed above the liquid fuel in the storage tank.

The unit will run on natural gas or LP gas, but has been configured at the factory to run on natural gas.

NOTE: Should the primary fuel need to be changed to LP gas, the fuel system needs to be reconfigured. See ***Fuel Conversion*** for instructions on converting the fuel system.

Recommended fuels should have a BTU content of at least 1,000 BTU/ft^3 (37.26 MJ/m^3) for natural gas; or at least 2,500 BTU/ft^3 (93.15 MJ/m^3) for LP gas.

NOTE: BTU fuel content information is available from the fuel supplier.

Required fuel pressure for natural gas is 3.5–7.0 in. water column (7–13 mm Hg) at the generator fuel inlet. Required fuel pressure for liquid propane vapor is 10–12 in. water column (19–22 mm Hg) at the generator fuel inlet.

NOTE: The primary regulator for the propane supply is NOT INCLUDED with the generator.

NOTE: All pipe sizing, construction, and layout must comply with NFPA 54 for natural gas applications and NFPA 58 or ICC IFGC for liquid propane applications. Verify fuel pressure NEVER drops below the required specification once the generator is installed. See the NFPA website at ***www.nfpa.org*** for further information regarding NFPA requirements.

Always consult local fuel suppliers or the fire marshal to check codes and regulations for proper installation. Local codes will mandate correct routing of gaseous fuel line piping around gardens, shrubs, and other landscaping.

Piping strength and connections should be given special consideration when installation takes place in areas at risk for; flooding, tornadoes, hurricanes, earthquakes, and unstable ground.

IMPORTANT NOTE: Use an approved pipe sealant or joint compound on all threaded NPT fittings.

NOTE: All installed gaseous fuel piping must be purged and leak tested prior to initial start-up in accordance with local codes, standards, and regulations.

Fuel Conversion

Converting from natural gas configuration to LP vapor can be accomplished with the following procedure. See ***Figure 5-1*** for fuel conversion knob location.

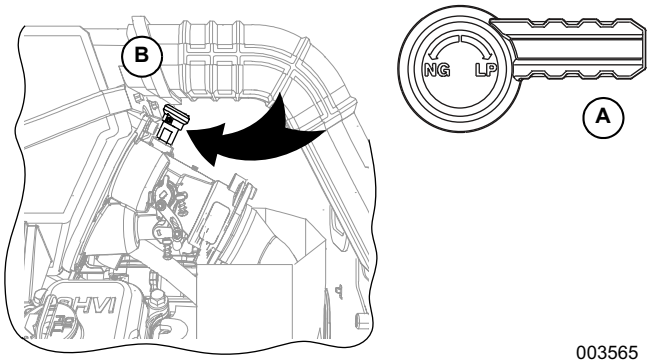

Figure 5-1. Fuel Conversion Knob Location

NOTE: The orange fuel conversion knob (A) is located above the fuel mixer (B).

To select the fuel type, turn the valve towards the marked fuel source arrow until it stops. Fuel knob will rotate 180° and slide into the mixer body when converting to LP.

NOTE: The fuel selection (LP/NG) must be entered on the controller during initial power up using the ***Installation Wizard*** navigation menu, or in the EDIT menu under “Fuel Selection.”

Fuel Consumption

Generator	Natural Gas		Propane	
	1/2 Load	Full Load	1/2 Load	Full Load
16 kW	6.17 / 218	8.75 / 309	2.03 / 7.70 / 74	2.94 / 11.11 / 107
22 kW	6.46 / 228	9.26 / 327	2.53 / 9.57 / 92	3.90 / 14.77 / 142

* Natural gas is in m^3/h / ft^3/h

** Propane is in gal/h / l/h (LP) / ft^3/h (LPV)

*** Values given are approximate

These are approximate values. Use the appropriate spec sheet or owner's manual for specific values.

Verify that gas meter is capable of providing enough fuel flow to include household appliances and all other loads.

NOTE: The gas supply and pipe MUST be sized at 100% load BTU / Megajoule rating.

Always refer to the owner's manual for the proper BTU, Megajoule and required gas pressures:

– Natural Gas:

BTU = ft^3/h x 1000

Megajoules = m^3/h x 37.26

– Liquid Propane Vapor:

BTU = ft^3/h x 2500

Megajoules = m^3/h / hour x 93.15

Fuel Line Sizing

Selecting the correct size fuel line is crucial to the proper operation of the unit.

IMPORTANT NOTE: The generator inlet size does not dictate the size of gas pipe to be used!

For further information refer to NFPA 54 for NG, or NFPA 58 or ICC IFGC for LP.

Measure the distance from the generator to the gas source.

IMPORTANT NOTE: The generator should be plumbed directly from the source, not off the end of an existing low pressure system.

Natural Gas Pipe Sizing

To determine correct gas pipe size, find the kW rating of the generator in the left column, and trace to the right. The number to the right is the maximum length (measured in meters / feet) allowed for the pipe sizes on top. Pipe sizes are measured by inside diameter (ID) to include any fittings, valves (must be full flow), elbows, tees, or angles.

NOTE: Add 2.5 ft (0.76 m) per any bend, tee, or angle in the pipe to the overall distance. Tables based on schedule 40 black pipe. If installing any other piping system, follow the pipe sizing charts for the selected piping system.

Table 5-1. Natural Gas Pipe Sizing

		For 5–7 in of water column (9–13 mmHg)				For 3.5–5 in of water column (7–9 mmHg)			
		Allowable Pipe Distances (feet / meters)							
Pipe Size (in / mm)	0.5 / 12.7	0.75 / 19	1 / 25	1.25 / 32	1.5 / 38	0.75 / 19	1 / 25	1.25 / 32	1.5 / 38
16 kW	—	10 / 3.0	35 / 10.6	140 / 42.6	300 / 91.4	—	10 / 3.0	60 / 18.2	125 / 38.1
22 kW	—	10 / 3.0	30 / 9.1	115 / 35.1	250 / 76.2	—	10 / 3.0	60 / 18.2	125 / 38.1

LP Vapor Pipe Sizing

To determine correct LP vapor pipe size, find the kW rating of the generator in the left column, and trace to the right. The number to the right is the maximum length (measured in meters / feet) allowed for the pipe sizes on top. The pipe sizes are measured by inside diameter (ID) to include any fittings, valves (must be full flow), elbows, tees, or angles. Add 2.5 ft (0.76 m) per any bend, tee, or angle in the pipe to the overall distance.

NOTE: Pipe sizes are using a second stage regulator.

NOTE: The minimum LP tank size is 250 gal (946 L), unless unit calculations dictate use of a larger tank. Vertical tanks, which are measured in pounds (or kilograms), are permitted if properly sized for the generator.

Table 5-3. LP Vapor Pipe Sizing

	For 10–12 in. of water column (19–22 mm Hg)		
	Allowable Pipe Distances (feet / meters)		
Pipe Size (in / mm)	0.75 / 19	1 / 25	1.25 / 32
16 kW	40 / 12.19	175 / 53.34	550 / 167.64
22 kW	20 / 6.10	80 / 24.38	350 / 106.68

Installing and Connecting Gas Lines

DANGER

Explosion and fire. Fuel and vapors are extremely flammable and explosive. No leakage of fuel is permitted. Keep fire and spark away. Failure to do so will result in death or serious injury. (000192)

IMPORTANT NOTE: Natural gas and LP vapor are highly volatile substances. Strictly adhere to all safety procedures, codes, standards, and regulations.

Gas line connections should be made by a certified contractor familiar with local codes. Always use AGA-approved gas pipe and a quality pipe sealant or joint compound.

Verify the capacity of the natural gas meter or the LP tank to provide sufficient fuel for both the generator and other operating appliances.

Shutoff Valve

The generator will require an external manual shut-off valve on the fuel line. The valve must be easily accessible. See A in ***Figure 5-3.***

NOTE: Local codes determine the proper location.

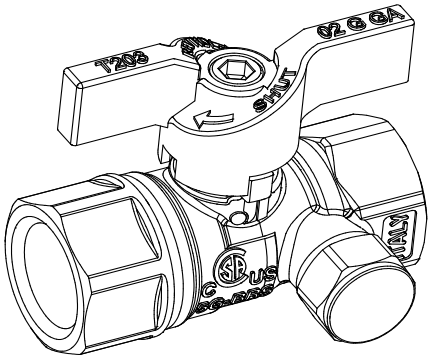

Figure 5-2. Accessory Valve with Manometer Port

NOTE: ***Figure 5-2*** illustrates a fuel shut-off valve with a manometer port for making fuel pressure checks. This optional accessory valve permits making pressure checks for diagnostic purposes without going into the generator enclosure.

Valves available through Generac and Independent Authorized Service Dealers (IASD):

- 1/2” ball valve, part number 0K8752
- 3/4” ball valve, part number 0K8754
- 1” ball valve, part number 0K8184
- 1-1/4” ball valve, part number 0L2844
- 1-1/2” ball valve, part number 0L2845
- 2” ball valve, part number 0L2846

Flexible Fuel Line

When connecting the gas line to the generator, use a listed assembly that meets the requirements of ANSI Z21.75/ CSA 6.27—Connectors for Outdoor Gas Appliances and Manufactured Homes or AGA-approved flexible fuel line in accordance with local regulations.

The flexible fuel line shall not be connected directly to the generator fuel inlet. Always connect the flexible fuel line to an approved gas fitting.

The purpose of flexible fuel line is to isolate vibration from the generator to reduce possibility of a gas leak at one of the connection points. See B in ***Figure 5-3***.

NOTE: Follow all installation instructions and warnings provided with the flexible fuel line. Do not remove any labels or tags.

Sediment Trap

Some local codes require a sediment trap. The fuel regulator connection has an integrated sediment trap. See C in ***Figure 5-3***.

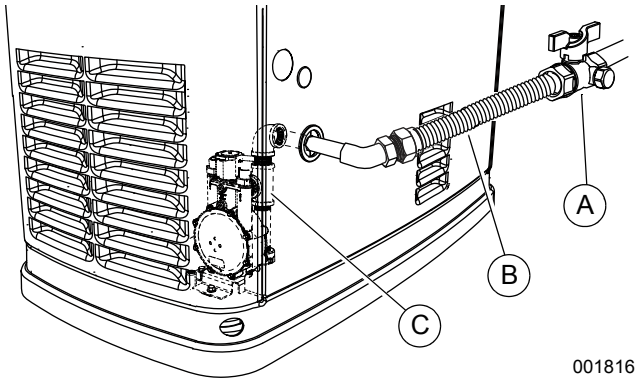

Figure 5-3. Sediment Trap, Fuel Shut-Off Valve with Manometer Port, and Flexible Fuel Line

The sediment trap must be cleaned periodically according to local codes. See the owner’s manual for more information.

Checking Gas Line Connections

1. Check for leaks by spraying all connection points with a non-corrosive gas leak detection fluid. The solution should not be blown away or form bubbles.
2. Check gas pressure at the regulator in the generator by following these steps.
   - Close gas supply valve.
   - Remove the top gas pressure test port from the regulator (see ***Figure 5-4***) and install the gas pressure tester (manometer).
   - Open the gas supply valve and verify the pressure is within the specified values.
   - Record static gas pressure: _____

NOTE: Gas pressure can also be tested at the manometer port on the fuel shut-off valve shown in ***Figure 5-3***.

NOTE: See the owner's manual or the spec sheet for proper fuel pressure specifications. If the gas pressure is not within specifications, contact the local gas supplier.

3. Close gas valve when completed, but keep manometer connected for future tests of the generator while starting, running and under loads.

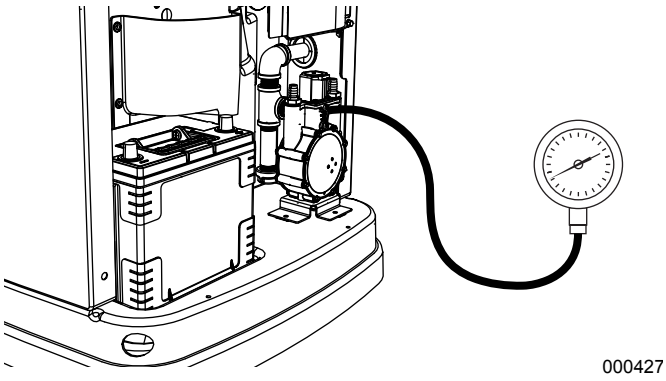

Figure 5-4. Checking Pressure with Manometer

Perform Leak Test

⚠DANGER

Explosion and fire. Fuel and vapors are extremely flammable and explosive. No leakage of fuel is permitted. Keep fire and spark away. Failure to do so will result in death or serious injury. (000192)

All products are tested at the factory before shipping to ensure the performance and integrity of the fuel system. However, it is important to perform a final fuel system leak test before starting the generator. The entire fuel system should be tested from supply to regulator.

See ***Figure 1-1***. Perform a final fuel system leak test after generator installation. The test will identify possible leaks at all connection points (A).

It is best practice to perform a fuel system leak test during normally-scheduled maintenance.

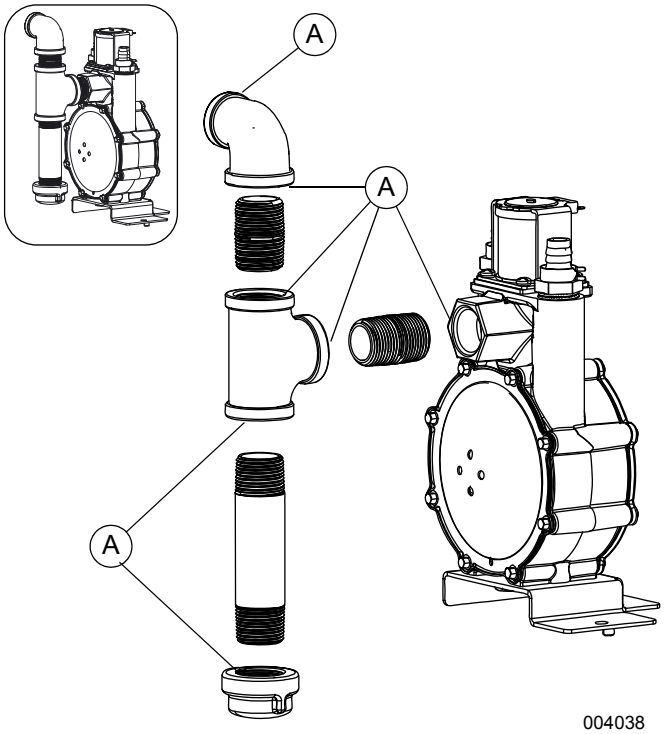

Figure 5-5. Connection Points to Leak Check

Check for leaks by spraying all connection points with a non-corrosive gas leak detection fluid. The solution should not be blown away or form bubbles.

Natural Gas Vapor Installation (typical)

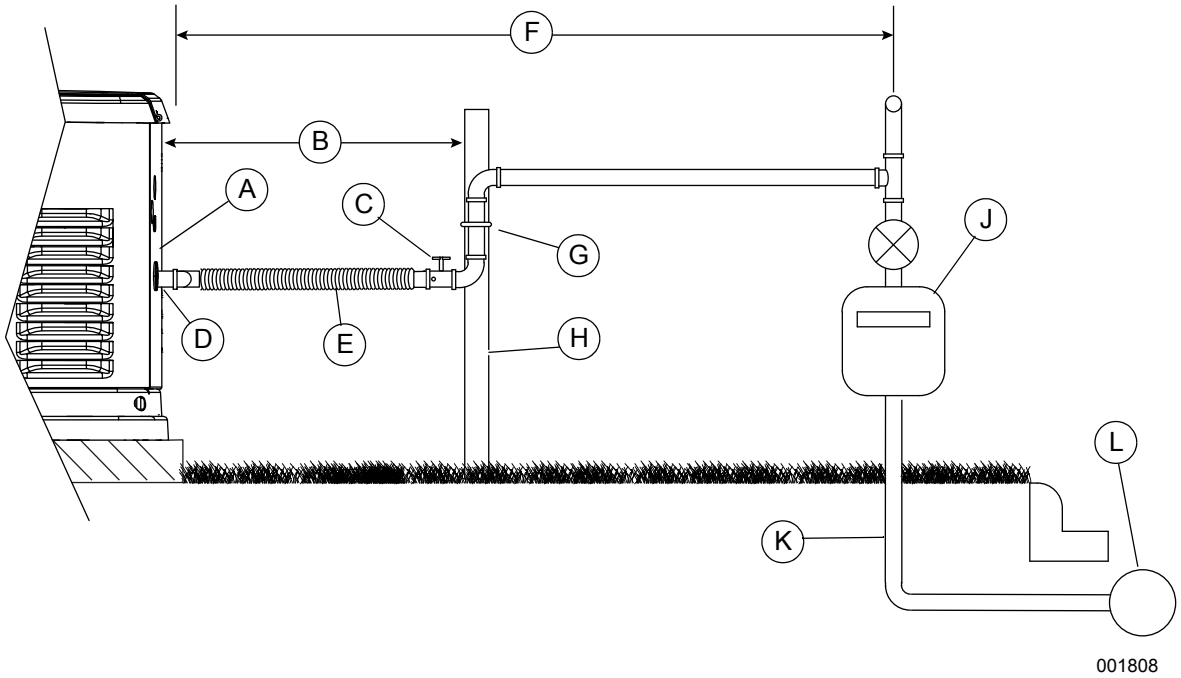

NG BTU = ft^3/h X 1000 Megajoules = m^3/h X 37.26	
A	BTU and pressure decal
B	Minimum distance from rear obstruction—see ***Site Selection***
C	Manual shutoff valve (pressure port optional)
D	Pipe nipple (field supplied)
E	Flexible fuel line
F	Check distance with gas provider
G	Clamp
H	Reinforcing rod
J	Size gas meter for 100% generator load plus all appliance loads
K	For underground installations, verify piping system for code compliance
L	Gas main

Figure 5-6. Natural Gas Vapor Installation (typical)

LP Vapor Installation (typical)

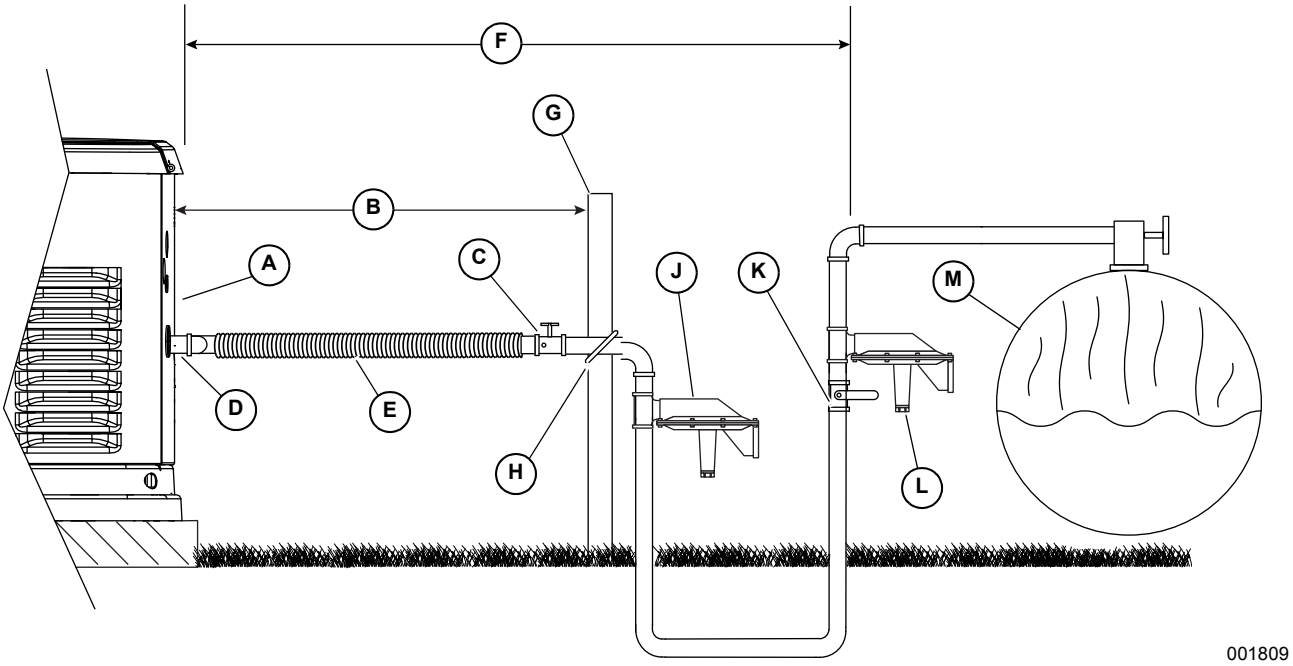

LP BTU = ft^3/h X 2500 Megajoules = m^3/h X 93.15	
A	BTU and pressure decal
B	Minimum distance from rear obstruction—see ***Site Selection***
C	Manual shutoff valve (pressure port optional)
D	Pipe nipple (field supplied)
E	Flexible fuel line
F	Check distance with gas provider
G	Reinforcing rod
H	Clamp
J	Secondary fuel pressure regulator
K	Manual shutoff valve
L	Primary fuel pressure regulator
M	Fuel tank—sized large enough to provide required BTUs for generator and ALL connected appliance loads. Be sure to correct for weather evaporation.

Figure 5-7. LP Vapor Installation (typical)

This page intentionally left blank.

Section 6: Electrical Connections

Generator Connections

See ***Figure 6-1***. The electrical wiring enclosure is located behind an access panel on the intake end of the unit. Remove the intake side panel as directed in ***Intake Side Panel Removal***, and then remove the access panel. Connect wires according to the diagram and tables.

1. Remove the main AC / control wiring knock-out plugs from the back of the generator.
2. Using the appropriate wiring hole, install the conduit and main AC and control wires between the generator and the transfer switch.
3. Close the unused hole with a NEMA 3R rated plug (field-supplied).

NOTE: All conductors are to be rated for minimum 300V. Control system interconnections may consist of N1, N2, and T1, and leads 23 and 194. The generator control wiring is a Class 1 signaling circuit. Reference the instruction manual of the specific engine generator for wiring connection details. Recommended wire gauge sizes for this wiring depends on the length of the wire, as recommended in ***Table 6-3***.

Exception: Conductors of AC and DC circuits, rated 1000 volts nominal or less, shall be permitted to occupy the same equipment, cable, or conduit. All conductors shall have an insulation rating equal to at least the maximum circuit voltage applied to any conductor within the equipment, cable, or conduit. See NEC 300.3(C)(1).

4. Strip the insulation from the ends of the wires. Do not remove excessive insulation. See ***Figure 6-1***. Route the sense wires through the supplied wire tie (C1), and connect to the sense wire terminal block (B). Push down on the spring loaded connection point with a flat head screwdriver, insert wire, and release.
5. Using the same process, route the control wires through the second supplied wire tie (C2), and connect to the control wire terminal block (A).
6. When all the wires are securely connected to the proper terminals, tighten the wire ties and clip the excess length.

NOTE: Only bare wire should be inserted into each terminal. Do not insert any wire insulation into terminals.

Control Wiring

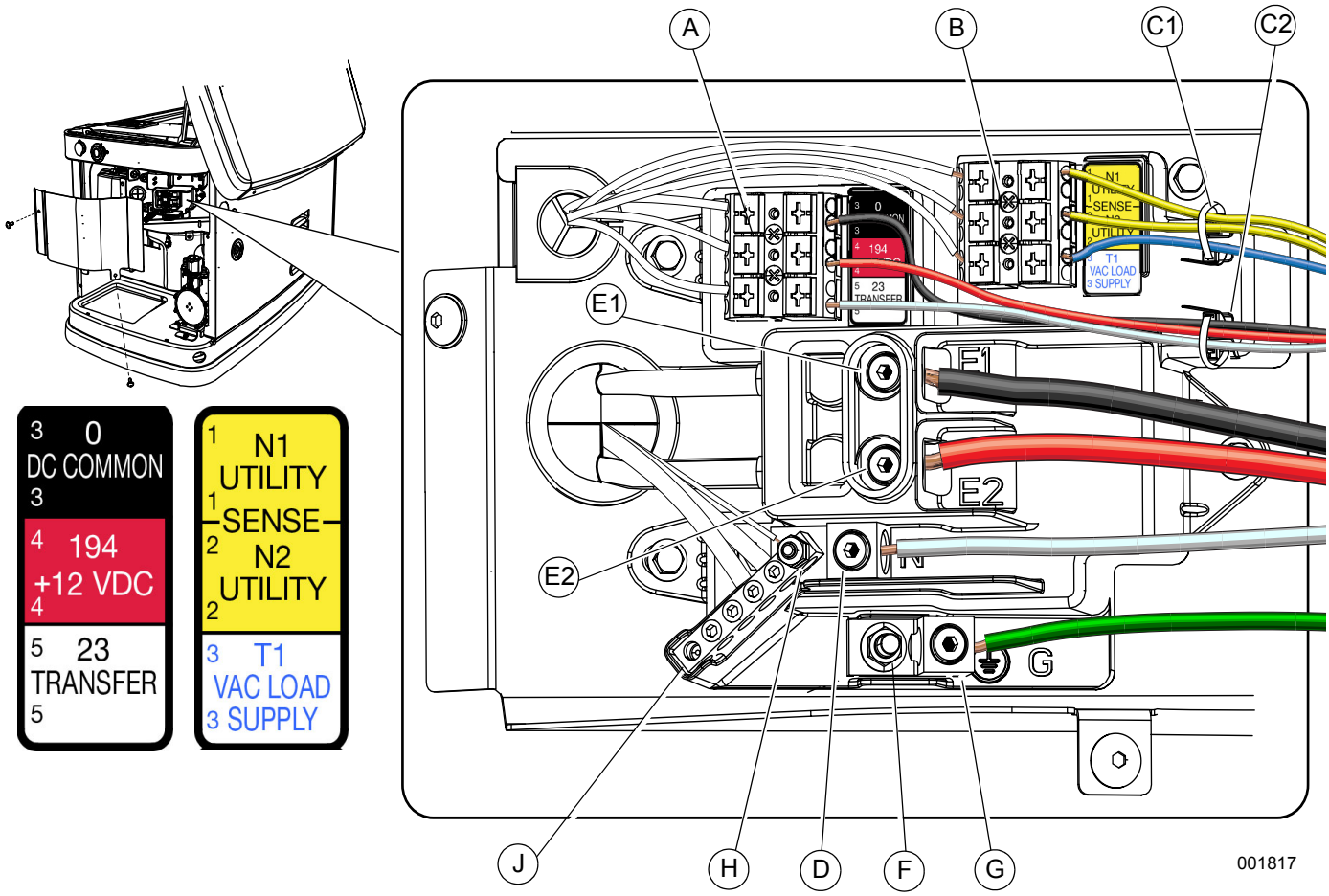

Figure 6-1. I Electrical Wiring Connections

Table 6-1. Electrical Wiring Connection Points

ID	Description	ID	Description	ID	Description	ID	Description
A	Control wire terminal block	C2	Wire tie for control wires	E2	Power lug E2	H	Neutral stud
B	Sense wire terminal block	D	Neutral lug	F	Ground stud	J	Neutral bar
C1	Wire tie for sense wires	E1	Power lug E1	G	Ground lug	—	—

Table 6-2. Customer Wiring Connections

Terminal Numbering Decal	Wire Numbers
YELLOW NO. 1 & NO. 2	N1 & N2 - 240 VAC - Sensing for utility dropout and pickup
BLUE NO. 3 *	T1 - Fused 120 VAC for battery charger
BLACK NO.3 **	0 - DC (-) Common ground wire
RED NO. 4	194 - DC (+) 12 VDC for transfer controls
WHITE NO. 5	23 - Transfer control signal wire

Table 6-3. Control Wire Recommended Length and Size (Copper conductors only)

Maximum Wire Length	Recommended Wire Size
1–115 ft (0.3–35 m)	No. 18 AWG
115–185 ft (35–56 m)	No. 16 AWG
185–295 ft (56–89 m)	No. 14 AWG
295–460 ft (89–140 m)	No. 12 AWG

* Required to supply utility or generator voltage to the generator battery charger.
** Required if the generator is paired with an optional Digital Power Management (DPM) smart technology transfer switch.

Table 6-4. Ground and Neutral Connections (Copper or Aluminum Conductors)			
Refer to national and/or local codes to verify correct wire sizes.			
No.	**Description**	**Recommended Wire Size**	**Torque Spec**
1	Power wire terminals	2/0 to 8 AWG	120 in-lb (13.56 Nm)
2	Large neutral lug	2/0 to 14 AWG	120 in-lb (13.56 Nm)
3	Large ground lug	2/0 to 14 AWG	120 in-lb (13.56 Nm)
4	Neutral bus bar	4-6 AWG 8 AWG 10-14 AWG	35 in-lb (3.95 Nm) 25 in-lb (2.82 Nm) 20 in-lb (2.26 Nm)

Main AC Wiring

NOTE: Main AC wiring must be in accordance with local jurisdiction and codes.

NOTE: The generator lugs are rated at 167 °F (75 °C), copper or aluminum.

1. Strip the insulation off the wire ends. Do not remove excessive insulation.
2. See ***Figure 6-1***. Loosen the lugs at neutral (D), ground (G), and power wire (mains) terminals (E1, E2).
3. Connect the ground wire to the ground lug and torque to the required specification. See ***Table 6-4***.
4. Connect the neutral wire to the neutral lug if applicable. Torque to the required specification. See ***Table 6-4.***
5. Insert the power wires (E1 and E2) into their corresponding lugs. Torque to the proper specification.
6. Verify the factory-installed ground and neutral connections are properly tightened to 25 in-lb (2.82 Nm).

NOTE: The neutral wire must remain connected to keep the battery charged whether the generator is running or not.

NOTE: Neutral bonding – For installations that require the neutral to be bonded to the ground, this is done on the customer connections terminals inside the generator. See ***Figure 6-1***. Connect a suitably sized wire from the neutral bar (J) to the ground stud (F). Torque the nut on the ground stud to 35 in-lbs (3.95 Nm). This is normally required when the generator is the source in a separately derived system. It is not required when the generator is a backup source in a utility supplied electrical system with a 2-pole transfer switch. The installation must be made in accordance with NEC Articles 250.30 and 250.35(A) if the generator will be installed as a separately derived system.

NOTE: Torque all wiring lugs, bus bars, and connection points to the proper torque specifications.

Conductors of AC and DC circuits, rated 1000 volts nominal or less, shall be permitted to occupy the same equipment, cable, or conduit. All conductors shall have an insulation rating equal to at least the maximum circuit voltage applied to any conductor within the equipment, cable, or conduit. See NEC 300.3(C)(1).

Service Entrance Decals

See ***Figure 2-6***. Locate the service entrance-related decals in the loose parts bag.

- Place the service disconnect decal next to the Main Line Circuit Breaker (Generator Disconnect).
- Place the service entrance warning decal in an appropriate location according to the instructions printed on the decal.

Common Alarm Relay (Option)

Alarms relating to generator and engine performance appear on the controller and in the Mobile Link™ application (if used). The controller is equipped with a common alarm relay that provides contacts for an optional customer-supplied external alarm indicator.

The common alarm relay is normally open until an alarm occurs, triggering the relay to close the contacts.

Terminals for the common alarm relay are provided in the wiring harness near the controller plug (Wires 209 and 210).

Contact rating is for resistive load only:

Contact rating	200 mA at 12 VDC

Battery Requirements

12 volts, Group 26R-540CCA minimum, or Group 35AGM-650CCA minimum.

Battery Installation

WARNING

Explosion. Batteries emit explosive gases while charging. Keep fire and spark away. Wear protective gear when working with batteries. Failure to do so could result in death or serious injury.

(000137a)

WARNING

Risk of burns. Batteries contain sulfuric acid and can cause severe chemical burns. Wear protective gear when working with batteries. Failure to do so could result in death or serious injury. (000138a)

- **(Group 26R batteries only)**: Fill the battery with the proper electrolyte fluid if necessary.
- Fully charge the battery before installing it.

Before installing and connecting the battery, complete the following steps:

1. Verify that the generator is OFF.
2. Turn off utility power supply to the transfer switch.
3. Remove the 7.5A fuse from the generator control panel.

Battery cables were factory connected at the generator. See ***Figure 6-2***. Connect cables to battery posts as follows:

WARNING

Explosion. Batteries emit explosive gases. Always connect positive battery cable first to avoid spark. Failure to do so could result in death or serious injury. (000133)

4. Connect the red battery cable (A: from starter contactor) to the battery post indicated by a positive: POS or (+). Torque to 70 in-lbs (8 Nm).
5. Connect the black battery cable (B: from frame ground) to the battery post indicated by a negative: NEG, or (-). Torque to 70 in-lbs (8 Nm).
6. Install the red battery post cover (shipped with loose parts).

NOTE: Dielectric grease should be used on battery posts to aid in the prevention of corrosion.

NOTE: Damage will result if battery connections are made in reverse.

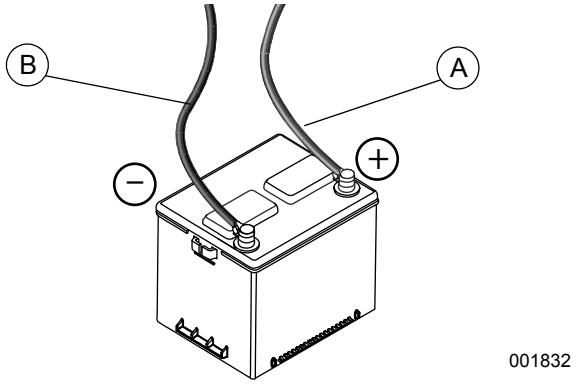

Figure 6-2. Battery Cable Connections

NOTE: In areas where temperatures fall below 0°F (-18°C), it is recommended that a pad type battery warmer be installed to aid in cold climate starting. This is available as part of a cold weather kit through an Independent Authorized Service Dealer (IASD).

A battery warmer is not necessary for AGM-style batteries.

Battery Disposal

WARNING

Environmental Hazard. Always recycle batteries at an official recycling center in accordance with all local laws and regulations. Failure to do so could result in environmental damage, death or serious injury. (000228)

Always recycle batteries in accordance with local laws and regulations. Contact your local solid waste collection site or recycling facility to obtain information on local recycling processes. For more information on battery recycling, visit the Battery Council International website at: ***http://batterycouncil.org***.

Section 7: Control Panel Start-Up/Testing

Control Panel Interface

DANGER

Automatic start-up. Disconnect utility power and render unit inoperable before working on unit. Failure to do so will result in death or serious injury.

(000191)

- Press the OFF button on the control panel, remove fuses, and disconnect battery cables to prevent accidental startup before performing any maintenance on the generator.
- Disconnect the cable from the battery post indicated by a NEGATIVE, NEG, or (–) first, then remove the POSITIVE, POS, or (+) cable.
- When reconnecting the cables, connect the POSITIVE cable first, and the NEGATIVE cable last.

Using the AUTO/MANUAL/OFF Buttons

Button	Description of Operation
AUTO	This button activates fully automatic system operation. Automatic operation allows the unit to automatically start and exercise the generator according to the exercise timer settings (see ***Setting The Exercise Timer***).
OFF	This button shuts down the engine and also prevents automatic operation and exercise of the unit.
MANUAL	This button will crank and start the generator. Transfer to standby power will not occur unless there is a utility failure.

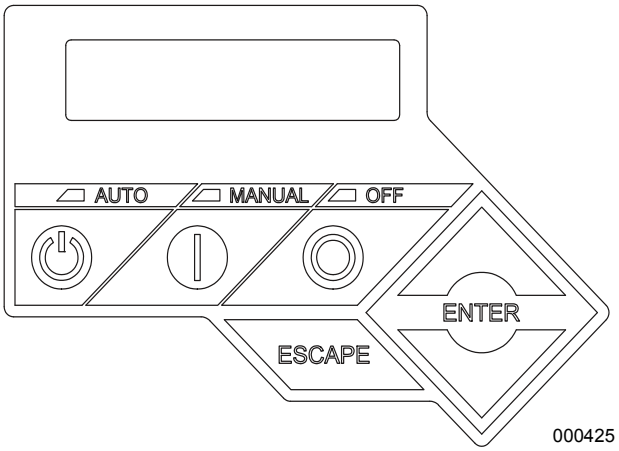

Figure 7-1. Generator Control Panel

Generator Setup

The controller will light up when battery power is applied to the generator during the installation process. The generator still needs to be activated before it will automatically run in the event of a power outage.

Activation

To receive the activation code, you must have the unit serial number and go to: ***www.generac.com***, “Service & Support” tab, and then “Activate Your Home Standby” under the “Generac Owners” list. You can also receive an activation code by calling 1-888-9ACTIVATE (1-888-922-8482).

Activating the generator is a simple, one-time process that is guided by the controller screen prompts. The controller screen will not prompt you to activate again once the product is activated, even if you disconnect the generator battery, fuse, and battery charge circuit. (T1)

Proceed as follows after obtaining your activation code:

1. The display interface will begin an installation wizard upon first power-up of the generator.

NOTE: If the unit has already been powered up, it is necessary to disconnect the generator battery, fuse, and battery charge circuit (T1).

2. The installation wizard prompts the user to set the fuel type. Chose fuel type and press ENTER. The controller will display “Activate me (ENT) or ESC”. Press ESC to run in MANUAL.
3. Press ENTER and use the up/down arrow keys and the ENTER key to input the activation code.

NOTE: If you push ESC to run in MANUAL, the unit will not function in AUTO. To enter the activation code at a later time, it is necessary to disconnect the generator battery, fuse, and battery charge circuit (T1).

The install wizard will only allow the user to change basic operational settings if the unit is not activated. These settings are: Current Date/Time and Exercise Day/Time. “NOT ACTIVATED” will be displayed.

The installation wizard will allow further programming parameters and AUTO operation if the unit is activated. The maintenance intervals will be initialized when the exercise time is entered. The exercise settings can be changed at any time via the EDIT menu. If the 12 volt battery is disconnected or the fuse removed, the installation wizard will operate upon power restoration. The display will only prompt the customer for the current Time and Date.

* This is required in addition to setting the fuel selector knob to the correct fuel for the generator to function properly.

Table 7-1. Activation Chart

Display Reads		Troubleshooting
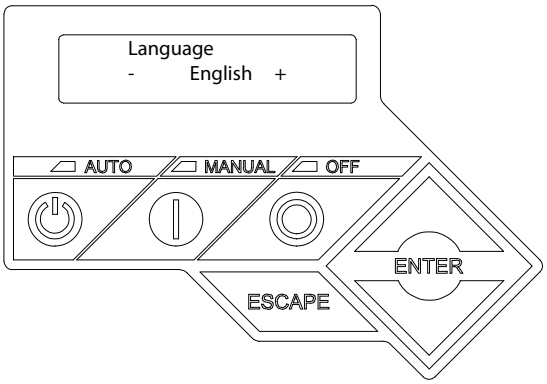	Use arrow keys to scroll to desired language. Press ENTER to select.	Language can be changed later using the EDIT menu.
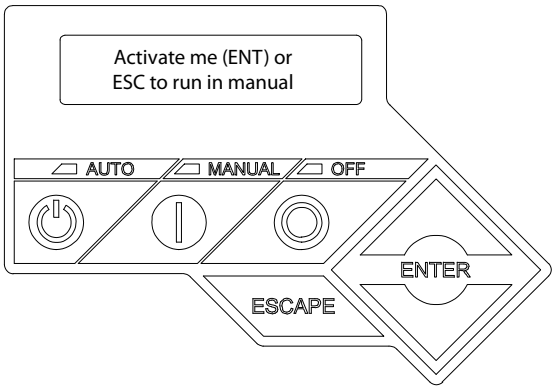	Press ENTER to begin the activation process.	If ESCAPE is pressed instead of ENTER, the generator will only run in manual mode (for test purposes) and NOT ACTIVATED will be displayed. You will need to remove the 7.5 amp generator control panel fuse AND disconnect the T1, N1, and N2 connector in the external connection box (if equipped); or disconnect utility input (main breaker) to the transfer switch for 3–5 seconds and reconnect, then begin with Step 1.
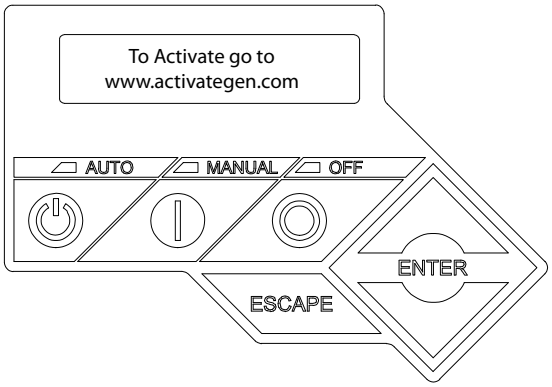	If you do not have your activation code, go to www.activategen.com or call 1-888-9ACTIVATE (922-8482 US & CA only). If you already have your activation code, wait 3–5 seconds for the next display.	
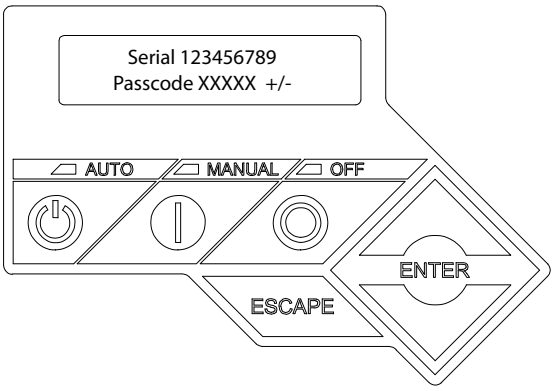	Use arrow keys to scroll and find the first number of your Activation Code. Press ENTER to select. Repeat this step until all digits have been entered. Use ESCAPE to correct previous digits.	

Table 7-1. Activation Chart

Display Reads		Troubleshooting
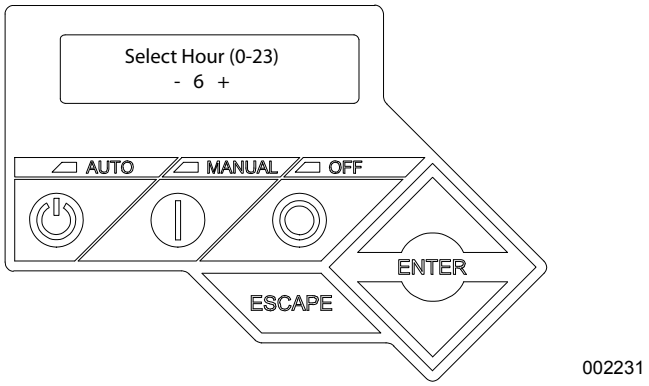	Activation is complete when all digits are entered above and your screen shows this display. Follow the controller prompts to continue setting the time function. Refer to your Owner's Manual with questions.	What happens if "Wrong Passcode Try Again" appears? Re-enter the activation code. If a second attempt is unsuccessful, check the number against the code given on activategen.com. If it is correct and the generator will not accept it, contact 1-888-9ACTIVATE (922-8482, US & CA only).

Cold Smart Start

The Cold Smart Start feature is enabled at the factory, and can be disabled in the EDIT menu. When Cold Smart Start is enabled, the generator will monitor ambient temperature and adjust its warm-up delay accordingly. If the ambient temperature is below a fixed temperature upon startup in AUTO mode (per the chart below), the generator will warm up for 30 seconds, allowing the engine to warm before the load is applied. If the ambient temperature is at or above the fixed temperature, the generator will start up with the normal warm-up delay of six seconds. See the Cold Smart Start section of the owner's manual.

Table 7-2. Cold Smart Start Set Points

Generator Size	16 kW	22 kW
Fixed Temperature	50 °F (10 °C)	20 °F (-7 °C)

Setting The Exercise Timer

This generator is equipped with a configurable exercise timer. There are two settings for the exercise timer:

- **Day/Time:** The generator will start and exercise for the period defined, on the day of the week and at the time of day specified. During this exercise period, the unit runs for five to twelve minutes depending on the model, and then shuts down.
- **Exercise frequency (how often the exercise will take place):** Can be set to WEEKLY, BIWEEKLY, or MONTHLY. If MONTHLY is selected, the day of the month must be selected from 1–28. The generator will exercise on that day each month. Transfer of loads to the generator output does not occur during the exercise cycle unless utility power is lost.

NOTE: If the installer tests the generator prior to installation, press the ENTER button to skip setting up the exercise timer.

NOTE: The exercise feature will operate only when the generator is placed in the AUTO mode, and will not work unless this procedure is performed. The current date/time will need to be reset every time the 12 volt battery is disconnected and then reconnected, and/or when the fuse is removed.

NOTE: The exercise timer does not automatically adjust for Daylight Savings Time.

Before Initial Start-up

NOTE: The unit has been run and tested at the factory prior to being shipped and does not require any type of break-in.

⚠CAUTION

Engine damage. Verify proper type and quantity of engine oil prior to starting engine. Failure to do so could result in engine damage.

(000135)

NOTE: The unit comes filled with 5W-30 weight organic oil from the factory. Check the oil level and add the appropriate viscosity and amount if necessary.

Installation Wizard

The installation wizard immediately appears upon power-up. It allows the user to input generator settings. See *Figure 7-2.*

The installation wizard will start every time AC and DC power are removed and reapplied to the generator.

Interconnect System Self Test Feature

This controller will go through a system self test at power up, which will check for the presence of utility voltage on the DC circuits. This is done to prevent damage if the installer incorrectly connects AC utility power sense wires into the DC terminal block. The controller will display a warning message and lock out the generator, preventing damage to the controller, if utility voltage is detected at the DC terminal block. Power to the controller must be removed to clear this warning.

Utility voltage must be turned on and present at the N1 and N2 terminals inside the generator control panel for this test to be performed and pass.

NOTE: All appropriate panels must be in place during any operation of the generator. This includes operation by a servicing technician, while conducting troubleshooting procedures.

Before starting, complete the following:

1. Verify that the generator is off.
2. Set the generator main circuit breaker to OFF (OPEN).
3. Turn off all breakers that will be powered by the generator.
4. Check the engine crankcase oil level and, if necessary, fill to the dipstick FULL mark with the recommended oil. Do not overfill.
5. Check the fuel supply. Gaseous fuel lines must have been properly purged and leak tested in accordance with applicable fuel-gas codes. All fuel shutoff valves in the fuel supply lines must be open.

NOTE: During initial start up only, the generator may exceed the normal number of start attempts and experience an “OVERCRANK” fault. This is due to accumulated air in the fuel system during installation. Reset the control board by pushing the OFF button and ENTER button, and restart up to two more times if necessary. If unit fails to start, contact an Independent Authorized Service Dealer (IASD) for assistance.

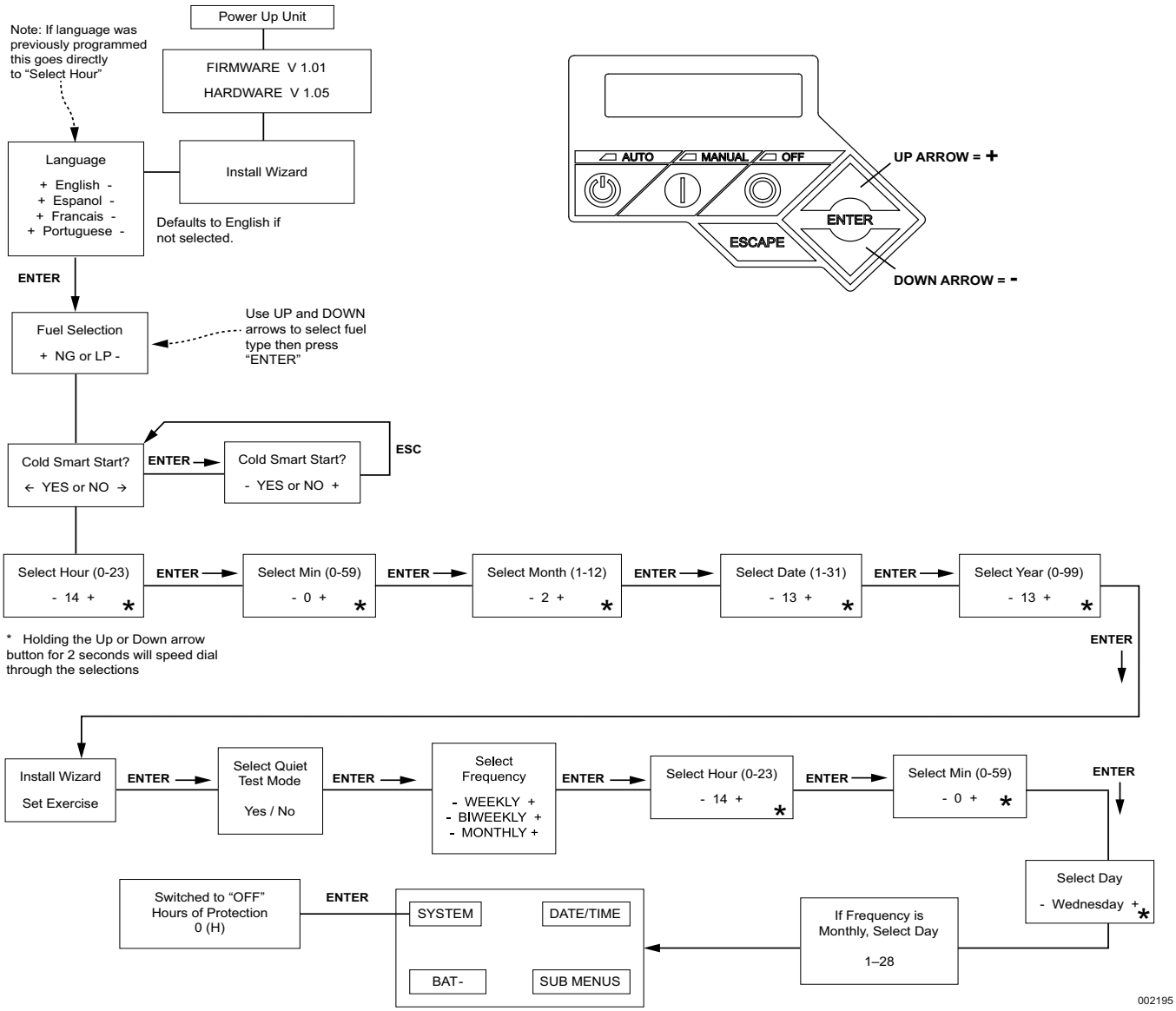

Figure 7-2. Installation Wizard Menu Map

Check Manual Transfer Switch Operation

Refer to the Manual Transfer Operation section of the owner's manual for procedures.

DANGER

Electrocution. Do not manually transfer under load. Disconnect transfer switch from all power sources prior to manual transfer. Failure to do so will result in death or serious injury, and equipment damage. (000132)

Electrical Checks

DANGER

Electrocution. High voltage is present at transfer switch and terminals. Contact with live terminals will result in death or serious injury.

(000129)

Proceed as follows to complete electrical checks:

1. Verify that the generator is off.
2. Set the generator main circuit breaker to OFF (OPEN).
3. Turn off all circuit breakers/electrical loads that will be supplied by the generator.
4. Turn on the utility power supply to the transfer switch using the means provided (such as a utility main line circuit breaker).
5. Use a calibrated AC voltmeter to check utility power source voltage across transfer switch terminals N1 and N2. Nominal line-to-line voltage should be 240 volts AC. If voltage is not correct, verify AC output and wiring from utility source to N1 and N2 lugs at transfer switch.
6. Check utility power source voltage across terminals N1 and the transfer switch neutral lug; then across terminal N2 and neutral. Nominal line-to-neutral voltage should be 120 volts AC (if wired with a neutral). If voltage is not correct, verify AC output and wiring from utility source to N1 and N2 lugs at transfer switch.
7. Turn off the utility power supply to the transfer switch when certain that utility supply voltage is compatible with transfer switch and load circuit ratings.
8. Push the MANUAL button on the generator panel. The engine will crank and start. Record cranking gas pressure: _____.
9. Let the engine warm up for approximately five minutes to allow internal temperatures to stabilize. Then set the generator MLCB (generator disconnect) to ON (CLOSED). Record running gas pressure: _____.
10. Connect a calibrated accurate AC voltmeter and a frequency meter across transfer switch terminal lugs E1 and E2. Voltage should be 238–242 at a frequency of 59.5–60.5 Hz. If voltage is not correct, verify that the MLCB (generator disconnect) is closed and verify AC output and frequency (Hertz or Hz) at the MLCB. Also verify wiring from generator to E1 and E2 lugs at transfer switch.
11. Connect the AC voltmeter test leads across terminal lugs E1 and neutral; then across E2 and neutral (if wired with a neutral). In both cases, voltage reading should be 119–121 volts AC. If voltage is not correct, verify that the MLCB (generator disconnect) is closed and verify AC output between the E1 and E2 of the MLCB (generator disconnect) and neutral at the generator.
12. Verify wiring from generator to E1, E2, and neutral lugs at transfer switch.
13. Set the generator MLCB (generator disconnect) to OFF (OPEN).
14. Push the generator OFF button. The engine will shut down.

NOTE: It is important not to proceed until certain that the generator AC voltage and frequency are correct and within the stated limits.

Generator Tests Under Load

Proceed as follows to test the generator set with electrical loads applied:

1. Verify that the generator is off.
2. Turn off all breakers/electrical loads that will be powered by the generator.
3. Turn off the utility power supply to the transfer switch, using the means provided (such as a utility MLCB [generator disconnect]).

DANGER

Electrocution. Do not manually transfer under load. Disconnect transfer switch from all power sources prior to manual transfer. Failure to do so will result in death or serious injury, and equipment damage.

(000132)

4. Manually set the transfer switch to STANDBY, i.e., load terminals connected to the generator's E1/E2 terminals. The transfer switch operating lever should be down.
5. Push the generator MANUAL button. The engine will crank and start immediately.
6. Allow the engine to stabilize and warm up for a few minutes.
7. Set the generator MLCB (generator disconnect) to ON (CLOSED). Loads are now powered by the standby generator.
8. Turn on the circuit breakers/electrical loads that are powered by the generator one by one.
9. Connect a calibrated AC voltmeter and a frequency meter across terminal lugs E1 and E2. Voltage should be approximately 240 volts and frequency should be approximately 60 Hz. If the voltage and frequency are rapidly dropping as the loads are applied, the generator may be overloading, or there may be a fuel issue. Check amperage value of loads and/or fuel pressure.
10. Let the generator run at full rated load for 20–30 minutes. Listen for unusual noises, vibration, or other indications of abnormal operation. Check for oil leaks, evidence of overheating, etc.

11. Verify gas pressure while under full load. Record loaded gas pressure: _____.
12. When testing under load is complete, turn off electrical loads.
13. Set the generator MLCB (generator disconnect) to OFF (OPEN).
14. Let the engine run at no-load for 2–5 minutes.
15. Push the generator OFF button. The engine will shut down.

NOTE: If gas pressure under full load is below the minimum operating pressure guideline, the generator may not function properly. The pressure gauge needle should also remain steady while testing. A fluctuating needle indicates that gas piping may be undersized or restricted. It may also indicate that a step-down gas regulator is too small, or too close to the unit.

Checking Automatic Operation

Proceed as follows to check the system for proper automatic operation:

1. Verify that the generator is off.
2. Install the front cover of the transfer switch.
3. Turn on the utility power supply to the transfer switch using the means provided (such as a utility MLCB).

NOTE: Transfer switch will transfer to utility position.

4. Set the generator MLCB (generator disconnect) to ON (CLOSED).
5. Push the generator AUTO button. The system is now ready for automatic operation.
6. Turn off the utility power supply to the transfer switch.

The generator is ready for automatic operation. The engine will crank and start when the utility source power is turned OFF after a five second delay and five second warmup (factory default setting). After starting, the transfer switch will connect load circuits to the standby side after a 5 or 30 second delay. See ***Cold Smart Start***. Allow the system to operate through the entire automatic sequence of operation.

With the generator running and loads powered by generator AC output, turn on the utility power supply to the transfer switch. The following will occur:

- After approximately 15 seconds, the switch will transfer loads to the utility power source.
- Approximately one minute after re-transfer, the engine will shut down.

Installation Summary

1. Verify the installation has been properly performed as outlined by the manufacturer and that it meets all applicable laws and codes.
2. Test and confirm proper operation of the system as outlined in the appropriate installation and owner's manuals.
3. Educate the end user on the proper operation, maintenance and service call procedures.

Shutting Generator Down While Under Load

IMPORTANT NOTE: To turn the generator off during utility outages to perform maintenance, or conserve fuel, follow these important steps:

To turn the generator OFF (while running in AUTO and online):

1. Turn the main utility disconnect OFF (OPEN).
2. Turn the main line circuit breaker (MLCB) on the generator to OFF (OPEN).
3. Allow the generator to run at least one minute to cool down.
4. Turn the generator OFF.

NOTE: If turning the unit off for longer than 24 hours, remove the F1 fuse from the generator controller.

To turn the generator back ON:

1. Install F1 fuse if previously removed.
2. Put the generator back into AUTO and allow to
3. start and warm-up for a few minutes.
4. Set the MLCB on the generator to ON (CLOSED).

The system will now be operating in automatic mode. The main utility disconnect can be turned ON (CLOSED).

NOTE: To shut the unit off, repeat this complete process.

Shutting Generator Down To Perform Maintenance

1. Press the OFF mode button on the controller and follow maintenance procedure(s).
2. Turn the MLCB (generator disconnect) on the generator to OFF (OPEN).
3. Turn the main utility disconnect OFF (OPEN).

To turn the generator back ON:

1. Turn the main utility disconnect ON (CLOSED).
2. Set the MLCB (generator disconnect) on the generator to ON (CLOSED).
3. Put the generator into AUTO mode.

This page intentionally left blank.

Section 8: Troubleshooting

System Diagnosis

Problem	Cause	Correction
Engine will not crank.	1. Blown fuse. 2. Loose, corroded, or defective battery cables. 3. Defective starter contact. 4. Defective starter motor. 5. Discharged battery.	1. Correct short circuit condition by replacing 7.5 amp fuse in generator control panel. If fuse continues to blow, contact an IASD for assistance. 2. Tighten, clean, or replace as necessary.* 3. *See #2. 4. *See #2. 5. Charge or replace battery.
Engine cranks but will not start.	1. No fuel 2. High fuel pressure. 3. Fuel selector in wrong position. 4. Defective fuel solenoid (FS). 5. Open Wire 14 from engine control board. 6. Defective spark plug(s). 7. Valve clearance out of adjustment.	1. Replenish fuel / turn on fuel valve. 2. Check and adjust fuel pressure. 3. Turn fuel conversion knob to correct position. 4. * 5. * 6. Clean; check gap; replace plug(s) as needed. 7. Reset valve clearance.
Engine starts hard and runs rough.	1. Plugged or damaged air cleaner. 2. Defective spark plug(s). 3. Incorrect fuel pressure. 4. Fuel selector in wrong position. 5. Internal engine issue.	1. Check / replace air cleaner. 2. Clean; check gap; replace plug(s) as needed. 3. Confirm fuel pressure to regulator is 10–12 in. water column (19–22 mm Hg) for LP, and 3.5–7 in. water column (7–13 mm Hg) for NG. 4. Turn fuel conversion knob to correct position, and program controller for fuel type. 5. *
Generator is set to OFF, but the engine continues to run.	1. Controller wired incorrectly. 2. Defective control board.	1. * 2. *
No AC output from generator.	1. MLCB (generator disconnect) is OFF (OPEN). 2. Generator internal failure. 3. Engine may be warming up. Refer to ***Cold Smart Start***.	1. Reset circuit breaker to ON (CLOSED). 2. * 3. Check controller screen to verify status.
No transfer to standby after utility source failure.	1. MLCB (generator disconnect) is OFF (OPEN). 2. Defective transfer switch coil. 3. Defective transfer relay. 4. Transfer relay circuit open. 5. Defective control logic board. 6. Engine may be warming up. Refer to ***Cold Smart Start***.	1. Reset circuit breaker to ON (CLOSED). 2. * 3. * 4. * 5. * 6. Check controller screen to verify status.
Unit consumes large amounts of oil.	1. Excessive engine oil. 2. Defective engine breather. 3. Improper type or viscosity of oil. 4. Damaged gasket, seal, or hose. 5. Restricted air filter.	1. Adjust oil to proper level. 2. * 3. See “Engine Oil Recommendations”. 4. Check for oil leaks. 5. Replace air filter.
* Contact an Independent Authorized Service Dealer or visit ***www.generac.com*** for assistance.		

This page intentionally left blank.

Section 9: Quick Reference Guide

System Diagnosis

To clear an active alarm, press the OFF button, ENTER button, then press AUTO. Contact an Independent Authorized Service Dealer (IASD) if the alarm reoccurs.

Table 9-1. System Diagnosis

Active Alarm	LED	Problem	Things to Check	Solution
NONE	FLASHING GREEN	Unit running in AUTO but no power in house.	Check MLCB (generator disconnect).	Check MLCB (generator disconnect). If it is ON, contact an IASD.
HIGH TEMPERATURE	RED	Unit shuts down during operation.	Check the LED's / screen for alarms.	Check ventilation around the generator, intake, exhaust, and rear of generator. If no obstructions are present, contact an IASD.
OVERLOAD REMOVE LOAD	RED	Unit shuts down during operation.	Check the LED's / screen for alarms.	Clear alarm and remove household loads from the generator. Put into AUTO and restart.
RPM SENSE LOSS	RED	Unit was running and shut down, attempts to restart.	Check the LED's / screen for alarms.	Clear alarm and remove household loads from the generator. Put into AUTO and restart. If generator does not start, contact an IASD.
NOT ACTIVATED	NONE	Unit will not start in AUTO with utility loss.	See if screen says unit not activated.	See ***Activation***.
NONE	GREEN	Unit will not start in AUTO with utility loss.	Check screen for start delay countdown.	If the startup delay is greater than expected, contact an IASD to adjust between 2 to 1500 seconds.
LOW OIL PRESSURE	RED	Unit will not start in AUTO with utility loss.	Check the LED's / screen for alarms.	Check oil level and add oil as needed. If oil level is correct, contact an IASD.
RPM SENSE LOSS	RED	Unit will not start in AUTO with utility loss.	Check the LED's / screen for alarms.	Clear alarm. Using the control panel, check the battery by navigating to the BATTERY MENU option from the MAIN MENU. If battery condition displays GOOD, contact an IASD. If control panel displays CHECK BATTERY, replace the battery.
OVERCRANK	RED	Unit will not start in AUTO with utility loss.	Check the LED's / screen for alarms.	Check fuel line shutoff valve is ON. Clear alarm. Start the unit in MANUAL. If it does not start, or starts and runs rough, contact an IASD.
LOW VOLTS REMOVE LOAD	RED	Unit will not start in AUTO with utility loss.	Check the LED's / screen for alarms.	Clear alarm and remove household loads from the generator. Put into AUTO and restart.
FUSE PROBLEM	RED	Unit will not start in AUTO with utility loss.	Check the LED's / screen for alarms.	Check the 7.5 amp fuse. If blown, replace it with an ATO 7.5 amp fuse. If the fuse is intact, contact an IASD.
OVERSPEED	RED	Unit will not start in AUTO with utility loss.	Check the LED's / screen for alarms.	Contact an IASD.
UNDERVOLTAGE	RED	Unit will not start in AUTO with utility loss.	Check the LED's / screen for alarms.	Contact an IASD.

Table 9-1. System Diagnosis (Continued)

Active Alarm	LED	Problem	Things to Check	Solution
UNDERSPEED	RED	Unit will not start in AUTO with utility loss.	Check the LED's / screen for alarms.	Contact an IASD.
STEPPER OVERCURRENT	RED	Unit will not start in AUTO with utility loss.	Check the LED's / screen for alarms.	Contact an IASD.
MISWIRE	RED	Unit will not start in AUTO with utility loss.	Check the LED's / screen for alarms.	Contact an IASD.
OVERVOLTAGE	RED	Unit will not start in AUTO with utility loss.	Check the LED's / screen for alarms.	Contact an IASD.
LOW BATTERY	YELLOW	Yellow LED illuminated in any state.	Check the screen for additional information.	Clear alarm. Using the control panel, check the battery by navigating to the BATTERY MENU option from the MAIN MENU. If battery condition displays GOOD, contact an IASD. If control panel displays CHECK BATTERY, replace the battery.
BATTERY PROBLEM	YELLOW	Yellow LED illuminated in any state.	Check the screen for additional information.	Contact an IASD.
CHARGER WARNING	YELLOW	Yellow LED illuminated in any state.	Check the screen for additional information.	Contact an IASD.
SERVICE A	YELLOW	Yellow LED illuminated in any state.	Check the screen for additional information.	Perform SERVICE A maintenance. Press ENTER to clear.
SERVICE B	YELLOW	Yellow LED illuminated in any state.	Check the screen for additional information.	Perform SERVICE B maintenance. Press ENTER to clear.
INSPECT BATTERY	YELLOW	Yellow LED illuminated in any state.	Check the screen for additional information.	Inspect battery. Press ENTER to clear.

Section 10: Accessories

Performance enhancing accessories are available for air-cooled generators.

Accessory	Description
Cold Weather Accessories*— • Battery Pad Warmer • Oil Warmer ** each sold separately*	• Recommended in areas where temperatures fall below 0 °F (-18 °C). *(Not necessary for use with AGM-style batteries)* • Recommended in areas where temperatures fall below 0 °F (-18 °C)
Scheduled Maintenance Kit	Includes all pieces necessary to perform maintenance on the generator along with oil recommendations.
Auxiliary Transfer Switch Lockout	Enables any of the transfer switches to completely lock out one large electrical load by tying into its control system.
Fascia Base Wrap	The fascia base wrap snaps together around the bottom of the generator. This offers a sleek, contoured appearance as well as offering protection from rodents, reptiles, and insects by covering the lifting holes located in the base. Requires use of the mounting pad shipped with the generator.
Mobile Link™ Cellular Enabled Accessory (USA only)	Allows user to check the status of the generator from anywhere that has access to an Internet connection from a PC or with any smart device. The user will be notified when a change in the generator's status occurs via e-mail or text message. Visit ***www.MobileLinkGen.com*** for more information.
Touch-Up Paint Kit	Very important to maintain the look and integrity of the generator enclosure. This kit includes touch-up paint and instructions.
Extended Warranty Coverage	Extend the generator warranty coverage by purchasing extended warranty coverage. Covers both parts and labor. Extended coverage can be purchased within 12 months of the end-users purchase date. This extended coverage is applicable to registered units and end-user proof of purchase must be available upon request. Available for Generac® Response Series products.
Wi-Fi LP Fuel Level Monitor	The Wi-Fi enabled LP fuel level monitor provides constant monitoring of the connected LP fuel tank. Monitoring the LP tank's fuel level is an important step in making sure your generator is ready to run during an unexpected power failure. Status alerts are available through a free application to notify when your LP tank is in need of a refill.

NOTE: Contact an Independent Authorized Service Dealer or visit ***www.generac.com*** for additional information on accessories and extended warranties.

This page intentionally left blank.

Section 11: Diagrams

Installation Drawing (10000002487—1 of 2)

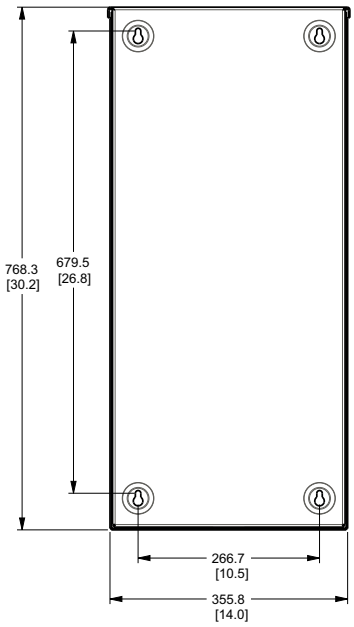

TRANSFER SWITCH
(IF SUPPLIED)

MOUNTING TO CONCRETE PAD

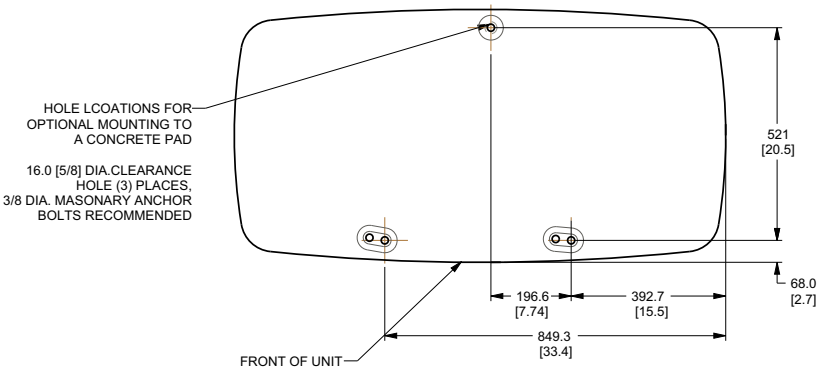

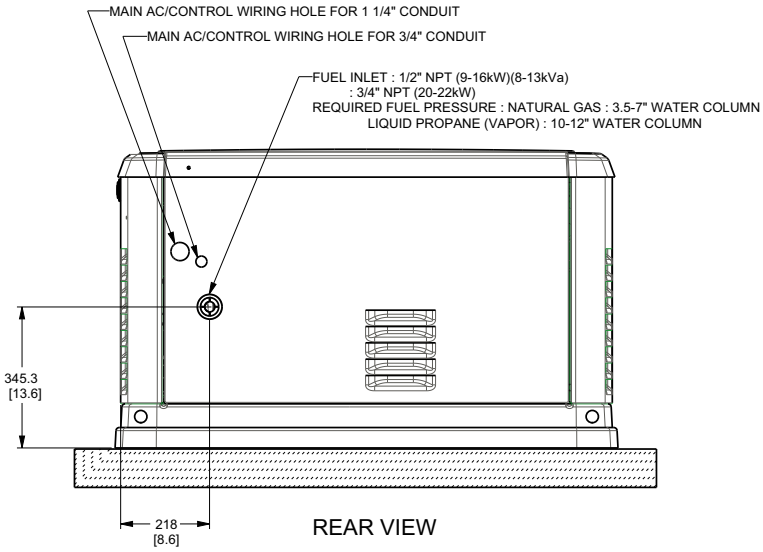

REAR VIEW

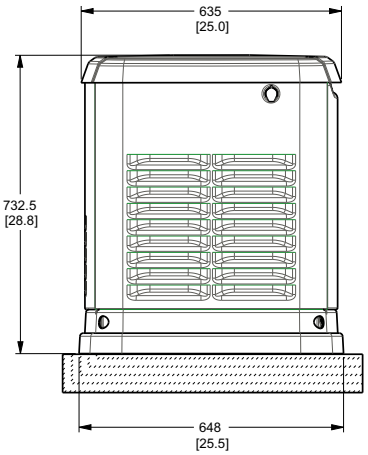

LEFT SIDE VIEW

10000002487-B

Installation Drawing (10000002487—2 of 2)

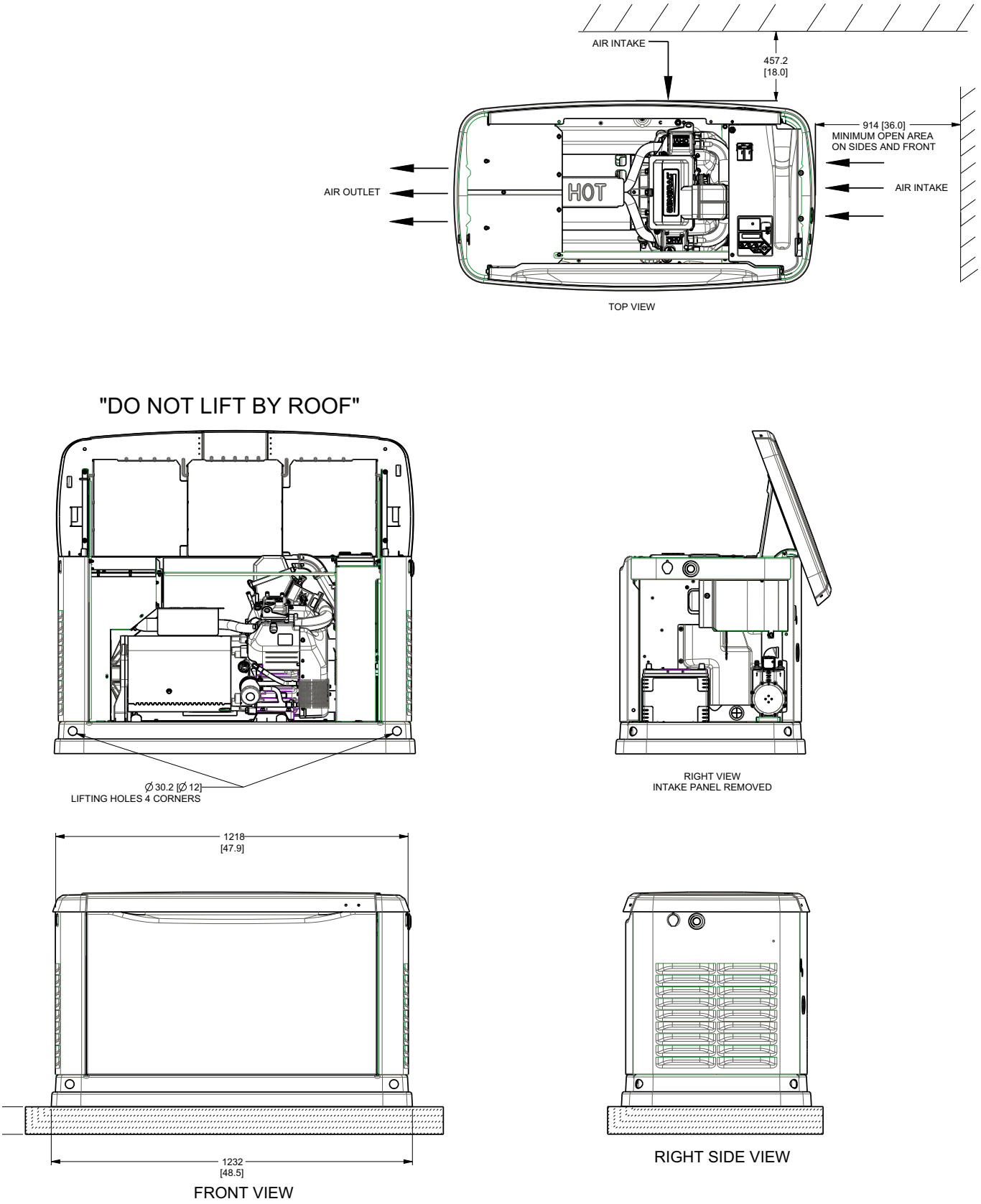

10000002487-B

This page intentionally left blank.

This page intentionally left blank.

Part No. 10000018917 Rev. A 09/01/17
©2017 Generac Power Systems, Inc.
All rights reserved
Specifications are subject to change without notice.
No reproduction allowed in any form without prior written consent from Generac Power Systems, Inc.

Generac Power Systems, Inc.
S45 W29290 Hwy. 59
Waukesha, WI 53189
1-888-GENERAC (1-888-436-3722)
www.generac.com