GENERAC®

Owner's Manual
For
Automatic Transfer Switch

100 Amp

Model Number
RXG16EZA3

MODEL NUMBER: _____

SERIAL NUMBER: _____

DATE PURCHASED:_____

Register your Generac product at:
WWW.GENERAC.COM
888-436-3722

Para español , visita: http://www.generac.com/service-support/product-support-lookup

Pour le français, visiter : http://www.generac.com/service-support/product-support-lookup

Найти на Русском: http://www.generac.com/service-support/product-support-lookup

SAVE THIS MANUAL FOR FUTURE REFERENCE

⚠WARNING

Operating, servicing and maintaining this equipment can expose you to chemicals including engine exhaust, carbon monoxide, phthalates, and lead, which are known to the State of California to cause cancer and birth defects or other reproductive harm. To minimize exposure, avoid breathing exhaust, do not idle the engine except as necessary, service your equipment in a well-ventilated area and wear gloves or wash your hands frequently when servicing your equipment. For more information go to www.P65Warnings.ca.gov.

(000393)

Table of Contents

Section 1: Introduction and Safety

Introduction 1

Safety Rules 1

Safety Symbols and Meanings 2

General Hazards 3

Section 2: General Information

Introduction 5

Unpacking 5

Equipment Description 5

Transfer Switch Mechanism 5

Utility Service Circuit Breaker (not supplied) 6

Transfer Switch Data Decal 6

Transfer Switch Enclosure 6

Safe Use of Transfer Switch 6

Section 3: Installation

Introduction to Installation 7

Mounting 7

Installing Breakers 7

Connecting Power Source and Load Lines 7

Connecting Start Circuit Wires 8

Installing Branch Circuit Conductors – USA Installations 9

Installing Branch Circuit Conductors – Canadian Installations 9

Auxiliary Contact 10

Section 4: Operation

Functional Tests and Adjustments 11

Manual Operation 11

Close to Utility Source Side 11

Close to Generator Source Side 11

Return to Utility Source Side 12

Voltage Checks 12

Utility Voltage Checks 12

Generator Voltage Checks 12

Generator Tests Under Load 12

Checking Automatic Operation 13

Installation Summary 13

Shutting Generator Down While Under Load 13

Fuse Removal and Installation 14

Section 5: Drawings and Diagrams

Installation Drawing 15

Drawing No. 10000012171 15

Interconnection Drawing 16

Drawing No. 10000016945 (Page 1 of 2) 16

Drawing No. 10000016945 (Page 2 of 2) 17

This page intentionally left blank.

Section 1: Introduction and Safety

Introduction

Thank you for purchasing a Generac Power Systems Inc. product. This unit has been designed to provide high performance, efficient operation, and years of use when maintained properly.

WARNING

Consult Manual. Read and understand manual completely before using product. Failure to completely understand manual and product could result in death or serious injury. (000100a)

Read this manual thoroughly and understand all of the instructions, cautions, and warnings before using this equipment. If any section of the manual is not understood, contact your nearest authorized dealer, or contact Generac Customer Service at 1-888-436-3722 (1-888-GENERAC), or ***www.generac.com*** with any questions or concerns.

The owner is responsible for proper maintenance and safe use of the equipment. Before operating or servicing this transfer switch:

- Study all warnings in this manual and on the product carefully.
- Become familiar with this manual and the unit before use.
- Refer to the installation sections of the manual for instructions on final assembly procedures. Follow the instructions completely.

Save these instructions for future reference. ALWAYS supply this manual to any individual that will use this equipment.

The information in this manual is accurate based on products produced at the time of publication. The manufacturer reserves the right to make technical updates, corrections, and product revisions at any time without notice.

Safety Rules

The manufacturer cannot anticipate every possible circumstance that might involve a hazard. The warnings in this manual, and on tags and decals affixed to the unit are, therefore, not all inclusive. If using a procedure, work method or operating technique that the manufacturer does not specifically recommend, verify that it is safe for others. Also make sure the procedure, work method or operating technique utilized does not render the equipment unsafe.

Throughout this publication, and on tags and decals affixed to the transfer switch, DANGER, WARNING, CAUTION and NOTE blocks are used to alert personnel to special instructions about a particular operation that may be hazardous if performed incorrectly or carelessly. Observe them carefully. Their definitions are as follows:

DANGER

Indicates a hazardous situation which, if not avoided, will result in death or serious injury.

(000001)

WARNING

Indicates a hazardous situation which, if not avoided, could result in death or serious injury.

(000002)

CAUTION

Indicates a hazardous situation which, if not avoided, could result in minor or moderate injury.

(000003)

NOTE: Notes contain additional information important to a procedure and will be found within the regular text of this manual.

These safety alerts cannot eliminate the hazards that they indicate. Common sense and strict compliance with the special instructions while performing the action or service are essential to preventing accidents.

Safety Symbols and Meanings

DANGER

Electrocution. High voltage is present at transfer switch and terminals. Contact with live terminals will result in death or serious injury.

(000129)

DANGER

Electrocution. Water contact with a power source, if not avoided, will result in death or serious injury.

(000104)

DANGER

Electrocution. In the event of electrical accident, immediately shut power OFF. Use non-conductive implements to free victim from live conductor. Apply first aid and get medical help. Failure to do so will result in death or serious injury. (000145)

DANGER

Electrical backfeed. Use only approved switchgear to isolate generator from the normal power source. Failure to do so will result in death, serious injury, and equipment damage.

(000237)

DANGER

Electrocution, equipment and property damage. Handle transfer switches carefully when installing. Never install a damaged transfer switch. Doing so could result in death or serious injury, equipment and property damage. (000195)

DANGER

Electrocution. Turn utility supply OFF before working on utility connections of the transfer switch. Failure to do so will result in death or serious injury. (000123)

DANGER

Electrocution. Do not disable or modify the connection box door safety switch. Doing so will result in death or serious injury.

(000157)

DANGER

Automatic start-up. Disconnect utility power and render unit inoperable before working on unit. Failure to do so will result in death or serious injury.

(000191)

DANGER

Equipment malfunction. Installing a dirty or damaged transfer switch will cause equipment malfunction and will result in death or serious injury.

(000119)

WARNING

Electric shock. Only a trained and licensed electrician should perform wiring and connections to unit. Failure to follow proper installation requirements could result in death, serious injury, and equipment or property damage.

(000155a)

CAUTION

Equipment damage. Verify all conductors are tightened to the factory specified torque value. Failure to do so could result in damage to the switch base.

(000120)

CAUTION

Equipment damage. Perform functional tests in the exact order they are presented in the manual. Failure to do so could result in equipment damage.

(000121)

CAUTION

Equipment damage. Exceeding rated voltage and current will damage the auxiliary contacts. Verify that voltage and current are within specification before energizing this equipment. (000134a)

General Hazards

DANGER

Electrical backfeed. Use only approved switchgear to isolate generator from the normal power source. Failure to do so will result in death, serious injury, and equipment damage.

(000237)

DANGER

Electrocution. High voltage is present at transfer switch and terminals. Contact with live terminals will result in death or serious injury.

(000129)

DANGER

Electrocution. Turn utility supply OFF before working on utility connections of the transfer switch. Failure to do so will result in death or serious injury.

(000123)

DANGER

Electrocution. Water contact with a power source, if not avoided, will result in death or serious injury.

(000104)

DANGER

Electrocution. Do not wear jewelry while working on this equipment. Doing so will result in death or serious injury.

(000188)

DANGER

Electrocution. Only authorized personnel should access transfer switch interior. Transfer switch doors should be kept closed and locked. Failure to do so will result in death or serious injury. (000213)

DANGER

Automatic start-up. Disconnect utility power and render unit inoperable before working on unit. Failure to do so will result in death or serious injury.

(000191)

DANGER

Electrocution. In the event of electrical accident, immediately shut power OFF. Use non-conductive implements to free victim from live conductor. Apply first aid and get medical help. Failure to do so will result in death or serious injury. (000145)

WARNING

Sudden start-up. Always set the safety disconnect switch to MANUAL before working on equipment. Failure to do so could result in death or serious injury.

(000194)

- Competent, qualified personnel should install, operate and service this equipment. Adhere strictly to local, state and national electrical and building codes. When using this equipment, comply with regulations established by the National Electrical Code (NEC), CSA Standard; C22.1 Canadian Electric Code, the Occupational Safety and Health Administration (OSHA), or the local agency for workplace health and safety.
- If working on this equipment while standing on metal or concrete, place insulative mats over a dry wood platform. Work on this equipment only while standing on such insulative mats.
- Never work on this equipment while physically or mentally fatigued.
- Any voltage measurements should be performed with a meter that meets UL3111 safety standards, and meets or exceeds overvoltage class CAT III.

This page intentionally left blank.

Section 2: General Information

Introduction

Thank you for purchasing a Generac transfer switch. This manual has been prepared especially for the purpose of familiarizing personnel with the design, application, installation, operation and servicing of the applicable equipment. Read this manual carefully and comply with all instructions. This will help to prevent accidents or damage to equipment that might otherwise be caused by carelessness, incorrect application, or improper procedures.

Every effort has been expended to make sure that the contents of this manual are both accurate and current. The manufacturer, however, reserves the right to change, alter or otherwise improve the product or manual at any time without prior notice.

Unpacking

Carefully unpack the transfer switch. Inspect closely for any damage that might have occurred during shipment. The purchaser must file with the carrier any claims for loss or damage incurred while in transit.

Check that all packing material is completely removed from the switch prior to installation.

Equipment Description

The automatic transfer switch is used for transferring electrical load from a UTILITY (NORMAL) power source to a GENERATOR (STANDBY) power source. Such a transfer of electrical loads occurs automatically when the UTILITY power source has failed or is substantially reduced and the GENERATOR source voltage and frequency have reached an acceptable level. The transfer switch prevents electrical feedback between two different power sources (such as the UTILITY and GENERATOR sources) and, for that reason, codes require it in all standby electric system installations.

The transfer switch consists of a transfer mechanism and an integrated PCB. The integrated PCB incorporates the transfer relay, sensing-battery charge fuses, and connection points for the start circuit wires.

Transfer Switch Mechanism

See ***Figure 2-1***. These switches are used with a single-phase system when the single-phase NEUTRAL line is to be connected to a neutral lug and is not to be switched.

Solderless, screw-type terminal lugs are standard.

The conductor size range is as follows:

Switch Rating	Wire Range	Conductor Tightening Torque	Lug Temp. Rating
100A	#14-1/0 AWG (Cu/Al)	50 **in-lbs** (5.6 Nm)	167°F (75°C)

This transfer switch is suitable for control of motors, electric discharge lamps, tungsten filament and electric heating equipment where the sum of motor full load ampere ratings and the ampere ratings of other loads do not exceed the ampere rating of the switch and the tungsten load does not exceed 30 percent of the switch rating.

This UL listed transfer switch is for use in optional standby systems only (NEC article 702).

This transfer switch is suitable for use on a circuit capable of 10,000 (100A) symmetrical amperes, 240 VAC maximum.

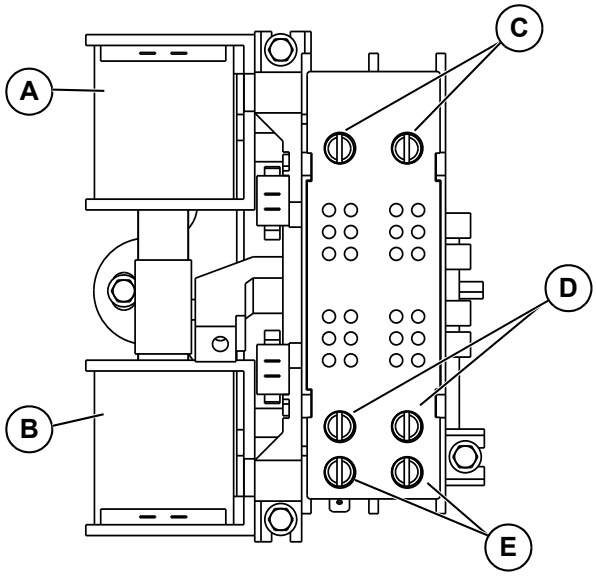

Figure 2-1. Typical Single-Phase ATS Transfer Mechanism

A	Utility Closing Coil
B	Generator Closing Coil
C	Utility Lugs (N1 & N2)
D	Generator Lugs (E1 & E2)
E	Load Lugs (T1 & T2)

Utility Service Circuit Breaker (not supplied)

This switch is listed for use with the following one inch breakers:

- Siemens*
- Murray*
- Eaton
- Square D

*Including GFCI, AFCI and tandem breakers up to 50 amps.

NOTE: For branch circuits over 50 amps, only listed Siemens or Murray circuit breakers shall be used.

Transfer Switch Data Decal

A data decal is permanently affixed to the transfer switch enclosure. Use this transfer switch only with the specific limits shown on the data decal and on other decals and labels that may be affixed to the switch. This will prevent damage to equipment and property.

When requesting information or ordering parts for this equipment, make sure to include all information from the data decal.

For future reference, record the Model and Serial numbers in the space provided on the front cover of this manual

Transfer Switch Enclosure

The standard switch enclosure is a National Electrical Manufacturer's Association (NEMA) and UL 3R type. UL and NEMA 3R (indoor/outdoor rated) type enclosures primarily provide a degree of protection against falling rain and sleet; are undamaged by the formation of ice on the enclosure.

Safe Use of Transfer Switch

WARNING

Consult Manual. Read and understand manual completely before using product. Failure to completely understand manual and product could result in death or serious injury. (000100a)

Before installing, operating or servicing this equipment, read the SAFETY RULES carefully. Comply strictly with all SAFETY RULES to prevent accidents and/or damage to the equipment. The manufacturer recommends that a copy of the SAFETY RULES be posted near the transfer switch. Also, be sure to read all instructions and information found on tags, labels and decals affixed to the equipment.

Publications that outline the safe use of transfer switches are the following:

- NFPA 70; National Electrical Code
- UL 1008, STANDARD FOR SAFETY-AUTOMATIC TRANSFER SWITCHES
- UL67 Panel boards

NOTE: It is essential to use the latest version of any standard to ensure correct and current information.

Section 3: Installation

Introduction to Installation

This equipment has been tested at the factory. Installing the switch includes the following procedures:

- Mounting the enclosure.
- Installing the circuit breakers.
- Connecting power source and load leads.
- Connecting the generator control wiring.
- Connecting branch circuit wiring.

Mounting

Mounting dimensions for the transfer switch enclosure are in this manual. Enclosures are typically wall-mounted. See ***Drawings and Diagrams***.

This transfer switch is mounted in a UL type 3R enclosure. It can be mounted outside or inside and should be based on the layout of installation, convenience and proximity to the utility supply and load center.

Install the transfer switch as close as possible to the electrical loads that are to be connected to it. Mount the switch vertically to a rigid supporting structure. To prevent switch distortion, level all mounting points. If necessary, use washers behind mounting holes to level the unit.

Installing Breakers

See ***Figure 3-1***. Insert the tab on the breaker (A) into the hook on the bus (B). Push the breaker into the bus until it snaps into place.

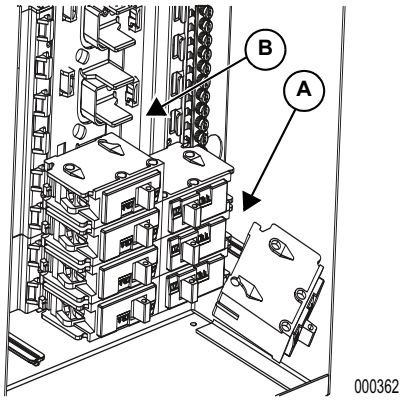

Figure 3-1. Installing Breakers

Connecting Power Source and Load Lines

DANGER

Electrocution. Turn utility and emergency power supplies to OFF before connecting power source and load lines. Failure to do so will result in death or serious injury. (000116)

Installation and interconnection diagrams are provided in this manual. See ***Drawings and Diagrams***.

NOTE: All installations must comply with national, state and local codes. It is the responsibility of the installer to perform an installation that will pass the final electrical inspection.

The utility supply, generator, and customer load connections are made at the transfer switch mechanism, inside the switch enclosure.

Conductor sizes must be adequate to handle the maximum current to which they will be subjected, based on the 75°C column of tables, charts, etc. used to size conductors. The installation must comply fully with all applicable codes, standards and regulations.

All power cables can enter the enclosure through the knockouts provided. If not using the knockouts, conduit entry into the enclosure above the level of uninsulated live parts shall use fittings listed for use in wet locations to maintain the Type 3R rating.

NOTE: If aluminum conductors are used, apply corrosion inhibitor to conductors. After tightening terminal lugs, carefully wipe away any excess corrosion inhibitor.

Tighten terminal lugs to the torque values as noted ***Utility Service Circuit Breaker (not supplied)*** and on the decal located on the inside of the door. After tightening terminal lugs, carefully wipe away any excess corrosion inhibitor.

CAUTION

Equipment damage. Verify all conductors are tightened to the factory specified torque value. Failure to do so could result in damage to the switch base.

(000120)

Connect power source and load conductors to clearly marked terminal lugs on transfer mechanism as follows:

1. Install a 2-pole, 100 Amp breaker in the main distribution panel. This will be the utility (normal) power source for transfer switch.
2. Install a conduit between the main distribution panel and transfer switch enclosures. Properly sized power cables can also be installed without the use of conduit if needed.

3. Run the conductors from 2-pole, 100 Amp breaker through conduit, or install power cable.
4. Connect utility (normal) power source cables to N1 and N2 terminals on the transfer switch mechanism.
5. Connect the generator (standby) source power cables to transfer switch terminals E1, E2.
6. Connect utility (normal) and generator ground cables to ground connection and neutral cables to the neutral bar.
7. Customer LOAD leads are not pre-wired at the factory.
8. Neutral and Ground Bars Accept #4-#14 AWG Cu/Al cable. If a larger Neutral or Ground Cable is required for the Generator Connection, Please utilize Lug Kit Siemens ECLK2 or Generac part number 10000006293 which accepts #4-2/O Cu/Al cable.

NOTE: Conduits must be properly supported. Cables can also be installed. Cables and conductors must be of approved insulative qualities and of the correct wire gauge size in accordance with applicable codes. Torque all lugs to the indicated torque settings with a calibrated torque wrench or screwdriver.

Connecting Start Circuit Wires

Control system interconnections consist of N1, N2, and T1, and leads 23, 194 and 0 (see ***Figure 3-2***).

NOTE: Generac Type TC-ER-JP power and control tray cable can be installed as permitted by the 2017 NEC. Type TC-ER-JP cable contains color-coded power and control conductors.

The generator control wiring is a Class 1 signaling circuit. Reference instruction manual of specific engine generator for wiring connection details. Screw heads are straight bladed and cross-bladed, and should be tightened to 3.5 in-lb (0.4 Nm).

Recommended minimum wire gauge is No. 18 AWG, up to 500 ft (152.4 m). Terminals are listed for copper conductors only.

Exception: Conductors of AC and DC circuits, rated 1000 volts nominal, or less, shall be permitted to occupy the same equipment, cable, or conduit. All conductors shall have an insulation rating equal to at least the maximum circuit voltage applied to any conductor within the equipment, cable, or conduit. See NEC 300.3(C)(1).

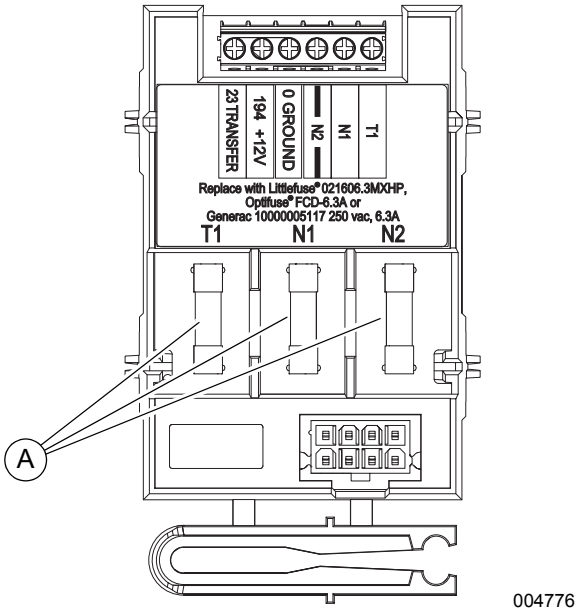

T1 (fused) — Battery Charge
N1 (fused) — Utility Sense
N2 (fused) — Utility Sense
0 — Ground (not required)
194 — + 12 VDC
23 — Transfer Control
A— 240 VAC, 6.3A Fuses

Figure 3-2. Typical Connections

Table 3-1. Customer Wiring Connections Integrated PCB (non-SACM)

Terminal Numbering Decal	Wire Numbers
BLUE*	T1—Fused 120 VAC for battery charger
YELLOW	N1—Fused 240 VAC Sensing for utility dropout and pickup
YELLOW WITH BLACK STRIPE	N2—Fused 240 VAC Sensing for utility dropout and pickup
BLACK	0—DC (-) **Not required**
RED	194—DC (+) 12 VDC for transfer controls
WHITE	23—Transfer control signal wire

** Required to supply utility or generator voltage to the generator battery charger.*

Installing Branch Circuit Conductors – USA Installations

1. Select which branch circuits will be protected by the generator in the normal power panel board.
2. Turn the circuit breaker in the normal power panel board to the off position.
3. Remove the ungrounded (hot) conductor from the circuit breaker and neutral conductor from the neutral terminal bar in the normal power panel board.

NOTE: If the circuit to be protected is part of a multi-wire branch circuit, the entire multi-wire branch circuit has to be relocated to the transfer switch panel board. (See NEC 210.4) The branch circuit wiring can be removed from the normal power panel board and installed in the transfer switch panel board, or spliced onto new branch circuit wiring originating from the transfer switch panel board.

4. If the normal power panel board is being used as a junction box for the protected branch circuit conductors, install an NEC approved conduit(s), raceway(s), or other approved wiring method between the transfer switch panel board and normal power panel board.
5. Install properly sized branch circuit conductors between the transfer switch panel board to the branch circuit conductors to be protected by the transfer switch.
6. Use listed wire nuts or any other approved termination device to connect the branch circuit conductors.
7. Install the provided label on the existing panel board that indicates the location of the disconnecting means for the pass through conductors.
8. If the generator protected branch circuit conductors are being re-installed into the transfer switch panel board, punch the required sized hole(s) for the cable, conduit, or raceway.
9. Route the branch circuit conductors into the transfer switch and terminate the equipment ground conductor on the equipment ground terminal bar, the neutral on the neutral terminal bar, and the ungrounded (hot) on the circuit breaker terminal.
10. Size all conductors, raceways, conduits, and junction boxes, if required, to the applicable NEC code articles and follow the NEC installation requirements for the wiring method(s) selected.

NOTE: For outdoor installations, any entry into the transfer switch enclosure that is above the level of uninsulated live parts shall use fittings listed for use for wet locations to maintain the NEMA 3R rating of the enclosure. The wiring methods installed shall be listed for use in wet locations.

Installing Branch Circuit Conductors – Canadian Installations

1. Select which branch circuits will be protected by the generator in the normal power panel board. Turn the circuit breaker in the normal power panel board to the off position.
2. Remove the ungrounded (hot) conductor from the circuit breaker and neutral conductor from the neutral terminal bar in the normal power panel board.

NOTE: If the circuit to be protected is part of a multi-wire branch circuit, the entire multi-wire branch circuit has to be relocated to the transfer switch panel board.

3. The Canadian Electric Code prohibits the use of the normal power panel board as a junction box, the generator protected branch circuit wiring will have to be relocated to a properly sized junction box, or reinstalled into the transfer switch panel board.
4. Punch the required sized hole(s) for the cable, conduit, or raceway.
5. Route the branch circuit conductors into the transfer switch and terminate the equipment ground conductor on the equipment ground terminal bar, the neutral on the neutral terminal bar, and the ungrounded (hot) on the circuit breaker terminal.
6. Size all conductors, raceways, conduits, and junction boxes, if required, to the applicable CEC code articles and follow the CEC installation requirements for the wiring method(s) selected.

NOTE: For outdoor installations, any entry into the transfer switch enclosure that is above the level of uninsulated live parts shall use fittings listed for use for wet locations to maintain the NEMA 3R rating of the enclosure. The wiring methods installed shall be listed for use in wet locations.

Auxiliary Contact

See ***Figure 3-3***. If desired, there is one normally-closed Auxiliary Contact (A) on the transfer switch to operate customer accessories, remote advisory lights, or remote annunciator devices. A suitable power source must be connected to the common terminal. If needed, an extra auxiliary contact can be added.

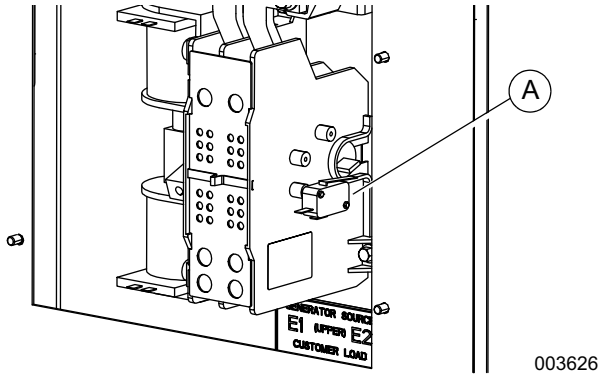

Figure 3-3. Auxiliary Contact

The auxiliary contact is normally closed when the transfer switch is in utility mode. The contacts will open when the transfer switch is in the standby power mode.

NOTE: Auxiliary Contact is rated 10 amps at 125 or 250 volts AC, and 0.6 amps at 125 volts DC.

⚠CAUTION

Equipment damage. Exceeding rated voltage and current will damage the auxiliary contacts. Verify that voltage and current are within specification before energizing this equipment. (000134a)

Fault Current Label

See ***Figure 3-4***. A Fault Current Identification Label is provided in the bag containing the unit Owner's Manual and transfer switch manual operating handle. The 2017 NEC requires that the short-circuit current rating of the transfer equipment, based on the type of overcurrent protective device protecting the transfer equipment, be field marked on the exterior of the transfer equipment. For NEC compliance, verify the required short-circuit current rating of the transfer switch before installation.The completed label provides the local AHJ (Authority Having Jurisdiction) with the information he or she may require during inspection.

Apply the label to the exterior of the transfer switch enclosure. Use a pen to fill in the required information, and then cover the label with the clear protective decal.

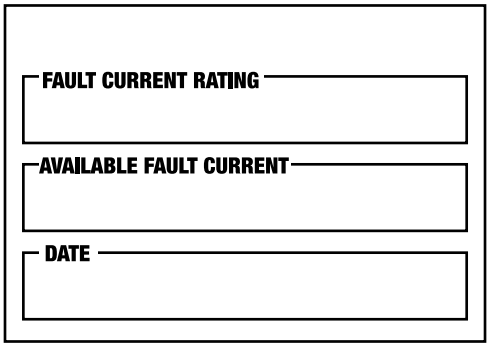

004496

Figure 3-4. Fault Current Label

Section 4: Operation

Functional Tests and Adjustments

Following transfer switch installation and interconnection, inspect the entire installation carefully. A competent, qualified electrician should inspect it. The installation should comply strictly with all applicable codes, standards, and regulations. When absolutely certain the installation is proper and correct, complete a functional test of the system.

⚠CAUTION

Equipment damage. Perform functional tests in the exact order they are presented in the manual.
Failure to do so could result in equipment damage.

(000121)

IMPORTANT: Before proceeding with functional tests, read and make sure all instructions and information in this section is understood. Also read the information and instructions of labels and decals affixed to the switch. Note any options or accessories that might be installed and review their operation.

Manual Operation

⚠DANGER

Electrocution. Do not manually transfer under load. Disconnect transfer switch from all power sources prior to manual transfer. Failure to do so will result in death or serious injury, and equipment damage.

(000132)

See ***Figure 4-1***. A manual handle is shipped with the transfer switch owner's manual. Manual operation must be checked BEFORE the transfer switch is operated electrically. To check manual operation, proceed as follows:

1. Verify the generator is in the OFF mode.
2. Turn OFF both UTILITY (service disconnect circuit breaker) and EMERGENCY (generator main line circuit breaker) power supplies to the transfer switch.
3. Note position of transfer mechanism main contacts by observing the movable contact carrier arm. This can be viewed through the long narrow slot in the inside cover of the ATS. The top of the movable contact carrier arm is yellow to be easily identified.
   - Manual operation handle in the UP position - LOAD terminals (T1, T2) are connected to UTILITY terminals (N1, N2).
   - Manual operation handle in the DOWN position - LOAD terminals (T1, T2) are connected to EMERGENCY terminals (E1, E2).

⚠CAUTION

Equipment damage. Do not use excessive force while manually operating the transfer switch. Doing so could result in equipment damage.

(000122)

Close to Utility Source Side

Before proceeding, verify the position of the switch by observing the position of manual operation handle in ***Figure 4-1***. If the handle is UP, the contacts are closed in the NORMAL (UTILITY) position, no further action is required. If the handle is DOWN, proceed with Step 1.

1. With the handle inserted into the movable contact carrier arm, move handle UP. Be sure to hold on to the handle as it will move quickly after the center of travel.
2. Remove manual operating handle from movable contact carrier arm. Return handle to storage bracket.

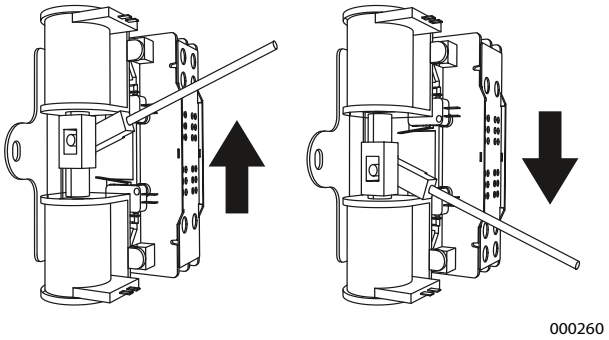

Figure 4-1. Manual Transfer Switch Operation

Close to Generator Source Side

Before proceeding, verify the position of the switch by observing the position of the manual operation handle in ***Figure 4-1***. If the handle is DOWN, the contacts are closed in the GENERATOR (STANDBY) position. No further action is required. If the handle is UP, proceed with Step 1.

1. With the handle inserted into the movable contact carrier arm, move the handle DOWN. Be sure to hold on to the handle as it will move quickly after the center of travel.
2. Remove manual operating handle from movable contact carrier arm. Return handle to storage bracket.

Return to Utility Source Side

1. Manually actuate switch to return manual operating handle to the UP position.
2. Remove manual operating handle from movable contact carrier arm. Return handle to storage bracket.

Voltage Checks

NOTE: Use the Digital Multimeter (DMM) LowZ low input impedance setting to collect accurate voltage measurements. LowZ eliminates the possibility of inaccurate ghost voltage readings, also known as phantom voltage or stray voltage readings. Refer to the DMM manufacturer's literature for additional information.

Utility Voltage Checks

1. Turn ON the UTILITY power supply to the transfer switch using the breaker in main distribution panel.

DANGER

Electrocution. High voltage is present at transfer switch and terminals. Contact with live terminals will result in death or serious injury.

(000129)

2. With an accurate AC voltmeter, check for correct voltage. Measure across ATS terminal lugs N1 and N2; N1 to NEUTRAL and N2 to NEUTRAL.

DANGER

Electrocution. Turn utility supply OFF before working on utility connections of the transfer switch. Failure to do so will result in death or serious injury.

(000123)

Generator Voltage Checks

1. On the generator panel, select the MANUAL mode of operation. The generator should crank and start.
2. Let the generator stabilize and warm up at no-load for at least five minutes.
3. Set the generator's main circuit breaker (CB1) to its ON or CLOSED position.

DANGER

Electrocution. High voltage is present at transfer switch and terminals. Contact with live terminals will result in death or serious injury.

(000129)

4. With an accurate AC voltmeter and frequency meter, check the no-load, voltage and frequency. Measure across ATS terminal lugs E1 to E2; E1 to NEUTRAL and E2 to NEUTRAL

Frequency	60-62 Hz
Terminals E1 to E2	240-246 VAC
Terminals E1 to NEUTRAL	120-123 VAC
Terminals E2 to NEUTRAL	120-123 VAC

5. When certain that generator supply voltage is correct and compatible with transfer switch ratings, turn OFF the generator supply to the transfer switch.
6. Set the generator main circuit breaker (CB1) to OFF or OPEN.
7. On the generator panel, select the OFF mode to shut down the generator.

NOTE: Do NOT proceed until generator AC output voltage and frequency are correct and within stated limits.

Generator Tests Under Load

1. Set the generator main circuit breaker to OFF or OPEN.
2. Set the utility service disconnect circuit breaker to OFF or OPEN.
3. Manually actuate the transfer switch main contacts to the emergency (Standby) position. See ***Manual Operation***.
4. To start the generator, select the MANUAL mode of operation. When engine starts, let it stabilize for a few minutes.
5. Set the generator main circuit breaker to ON or CLOSED. The generator now powers all LOAD circuits. Check generator operation under load as follows:
   - Turn on electrical loads to the full rated wattage/ amperage capacity of the generator. DO NOT OVERLOAD.
   - With maximum rated load applied, check voltage and frequency across transfer switch terminals E1 and E2. Voltage should be greater than 230 VAC (240 VAC system); frequency should be greater than 59 Hz.
   - Verify that the gas pressure remains within acceptable parameters (see the generator Installation Guidelines manual).
   - Let the generator run under rated load for at least 30 minutes. With unit running, listen for unusual noises, vibration, overheating, etc., that might indicate a problem.
6. When checkout under load is complete, set main circuit breaker of the generator to the OFF or OPEN position.
7. Let the generator run at no-load for several minutes. Then, shut down by selecting the OFF mode.

8. Move the main switch contacts back to the utility position.

NOTE: See ***Manual Operation***. Handle and operating lever of transfer switch should be UP.

9. Turn on the utility power supply to transfer switch, using whatever means provided (such as a utility main line circuit breaker). The utility power source now powers the loads.
10. The system is now set for fully automatic operation.

Checking Automatic Operation

To check the system for proper automatic operation, proceed as follows:

1. Verify generator is OFF.
2. Verify switch is de-energized.
3. Install front cover of the transfer switch.
4. Turn the utility power supply to the transfer switch ON, using the utility main line circuit breaker.
5. Set the generator main circuit breaker to ON.
6. On the generator panel, select AUTO. The system is now ready for automatic operation.
7. Turn utility power supply to the transfer switch OFF.

With the generator ready for automatic operation, the engine should crank and start when the utility source power is turned OFF after a ten second delay (factory default setting). After starting, the transfer switch should connect load circuits to the standby side after a five (5) second delay. Let the system operate through its entire automatic sequence of operation.

With the generator running and loads powered by generator AC output, turn ON the utility power supply to the transfer switch. The following should occur:

- After approximately 15 seconds, the switch should transfer loads back to the utility power source.
- Approximately one minute after re-transfer, the engine should shut down.

With the generator in the AUTOMATIC mode, the system is now set for fully automatic operation.

Installation Summary

1. Verify the installation has been properly performed as outlined by the manufacturer and that it meets all applicable laws and codes.
2. Verify proper operation of the system as outlined in the appropriate installation and owner's manuals.
3. Educate the end-user on the proper operation, maintenance and service call procedures.

Shutting Generator Down While Under Load Or During A Utility Outage

⚠DANGER

Automatic start-up. Disconnect utility power and render unit inoperable before working on unit. Failure to do so will result in death or serious injury.

(000191)

IMPORTANT NOTE: To avoid equipment damage, follow these steps, in order, during utility outages. Shutdowns may be required during utility outages to perform routine maintenance or to conserve fuel.

To turn the generator OFF:

1. Set the main utility disconnect to OFF (OPEN).
2. Set the generator MLCB (generator disconnect) to OFF (OPEN).
3. Allow the generator to run for a cool-down period of approximately one minute.
4. At the controller, set the generator to OFF.
5. Remove the 7.5A fuse from the controller.

To turn the generator back ON:

1. Install 7.5A fuse in controller.
2. Confirm the generator MLCB (generator disconnect) is OFF (OPEN).
3. At the controller, set the generator to AUTO mode.
4. Generator will start and run. Allow generator to run and warm up for a few minutes.
5. Set the MLCB (generator disconnect) to ON (CLOSED).
6. Set the main utility disconnect to ON (CLOSED).

The system now operates in automatic mode.

Fuse Removal and Installation

See ***Figure 4-2***. A fuse removal and installation tool (A) is included in the control housing.

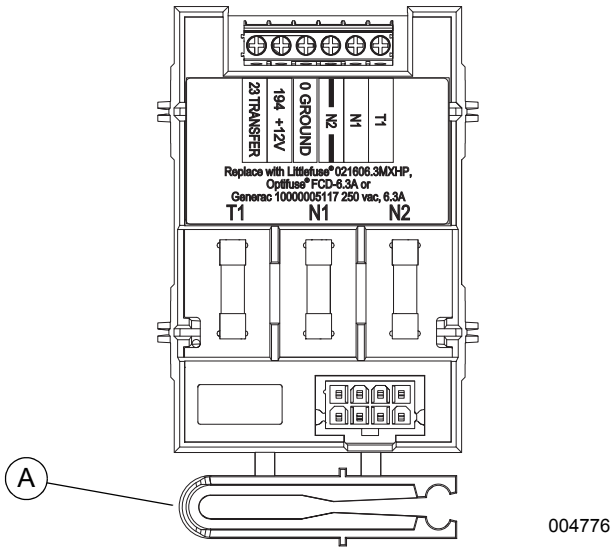

Figure 4-2. Fuse Removal and Installation Tool

If a fuse requires replacement, snap the tool free with an appropriate tool such as diagonal pliers, and use it to replace the fuse. The tool can be stored in the control housing retainer directly above the fuses, with the large thumb tab facing out.

Use only Generac replacement fuses—part number 100000005117, rated 240 VAC, 6.3 Amps, 10,000 AIC.

Alternative fuses are Littelfuse® 021606.3MXHP or Optifuse® FCD-6.3.

Section 5: Drawings and Diagrams

Installation Drawing

Drawing No. 10000012171

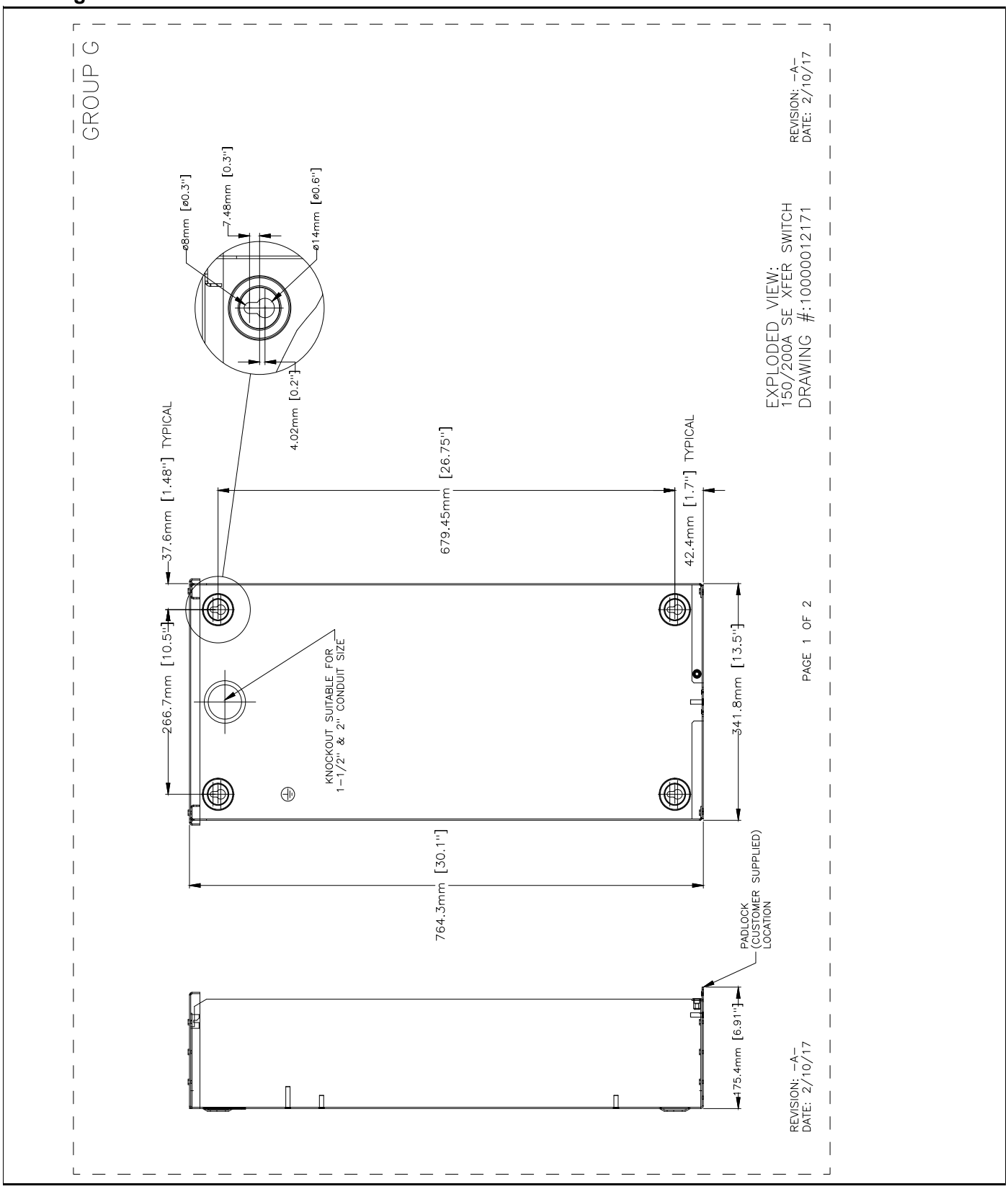

Interconnection Drawing

Drawing No. 10000016945 (Page 1 of 2)

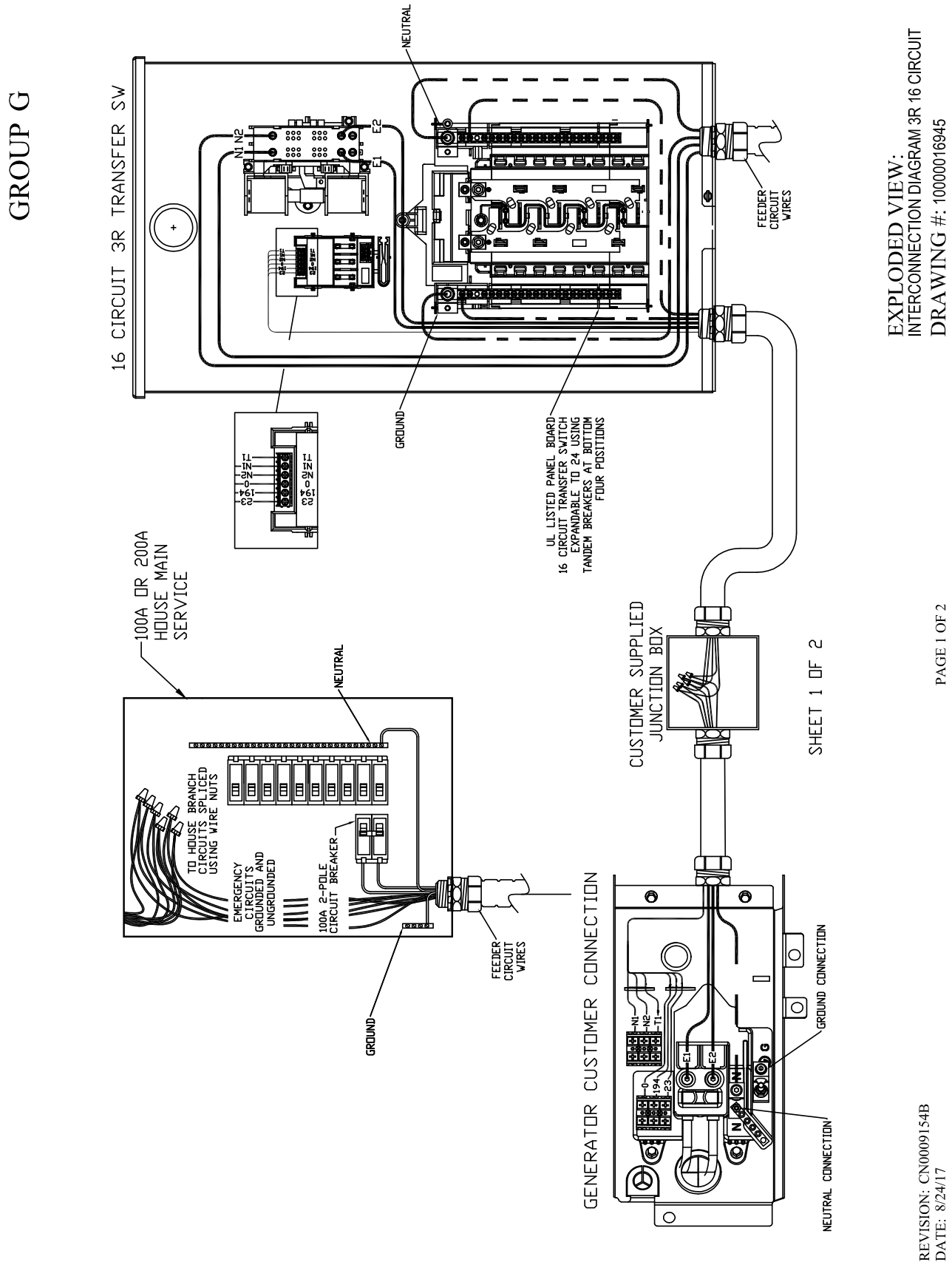

Drawing No. 10000016945 (Page 2 of 2)

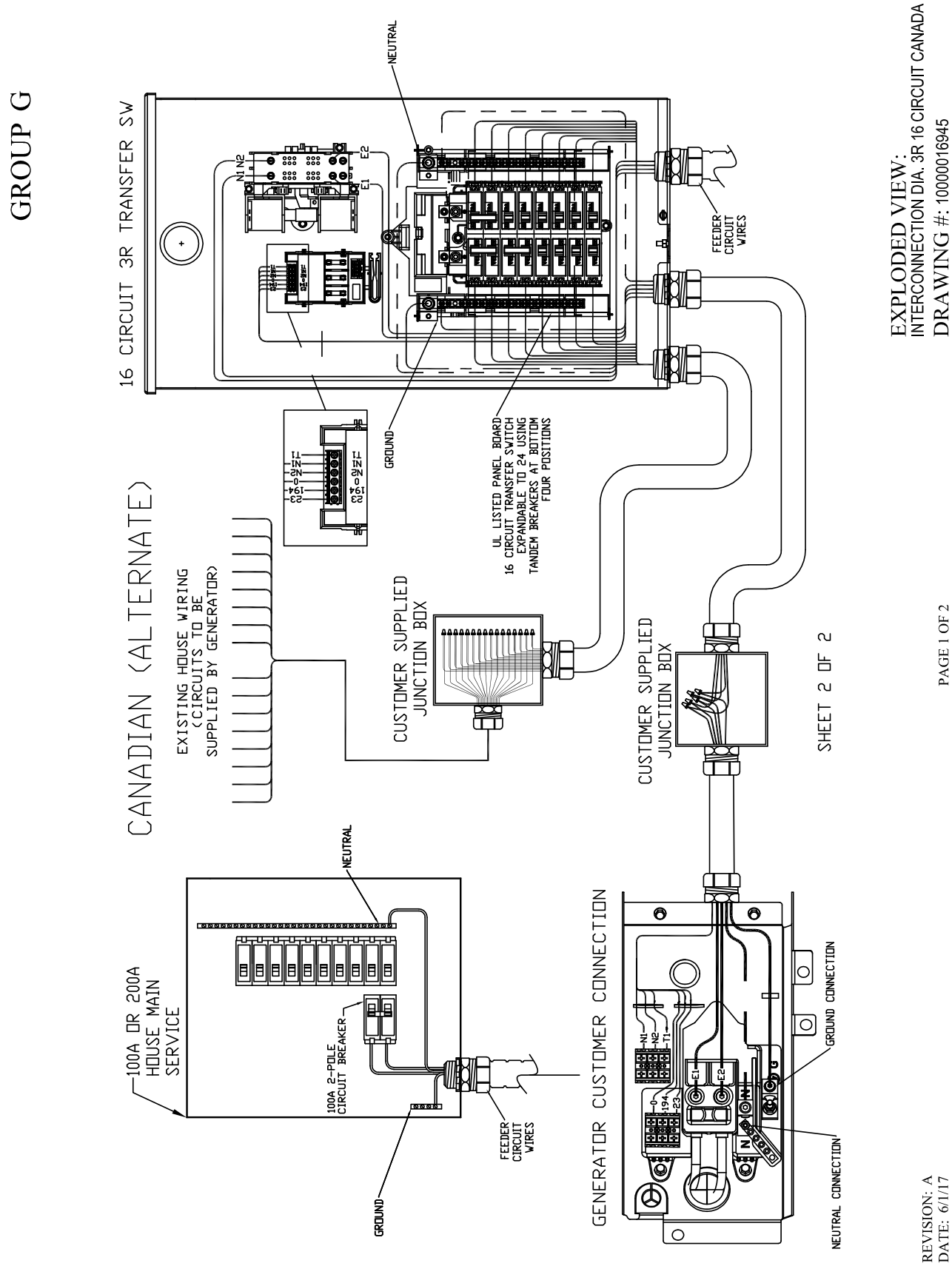

This page intentionally left blank.

Part No. 10000012410 Rev. B 09/22/17

©2017 Generac Power Systems, Inc.
All rights reserved
Specifications are subject to change without notice.
No reproduction allowed in any form without prior written consent from Generac Power Systems, Inc.

Generac Power Systems, Inc.
S45 W29290 Hwy. 59
Waukesha, WI 53189
1-888-GENERAC (1-888-436-3722)
www.generac.com