SH 1/1 | REV D | WINDCHILL VERSION D.1

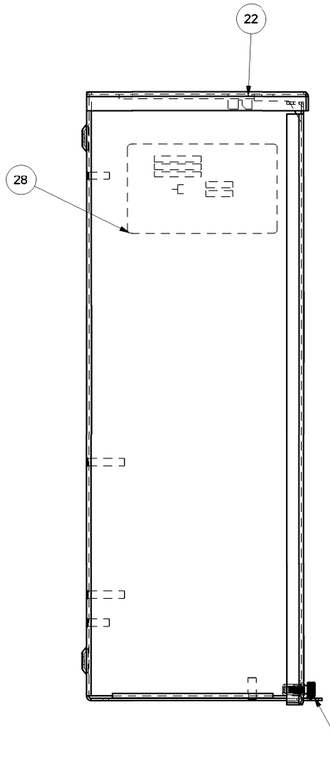

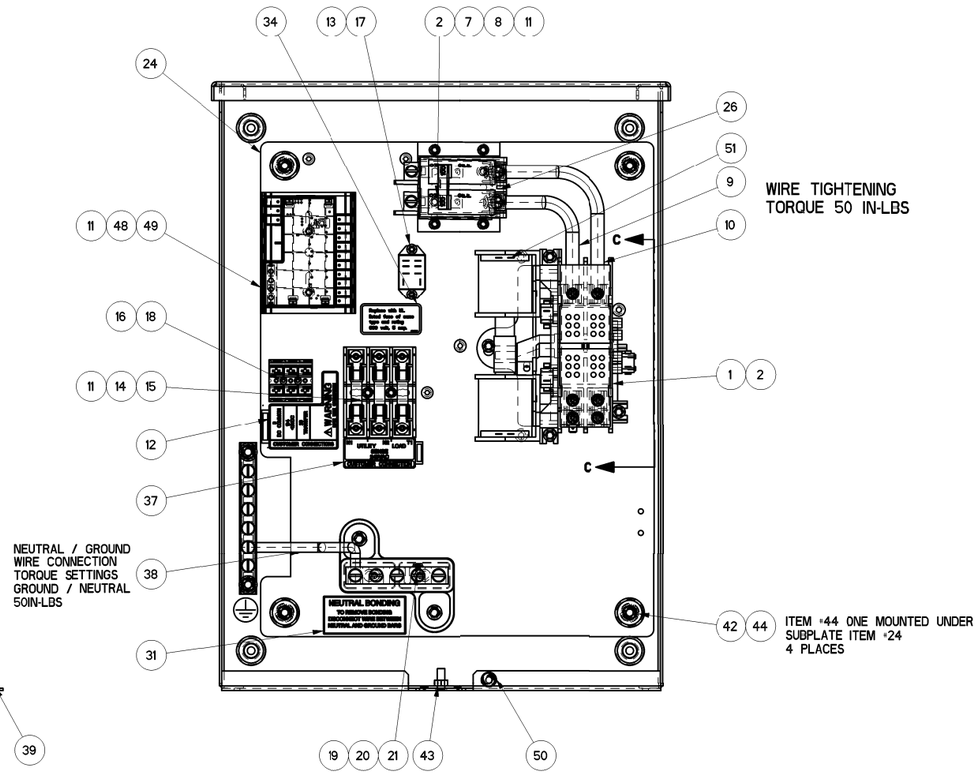

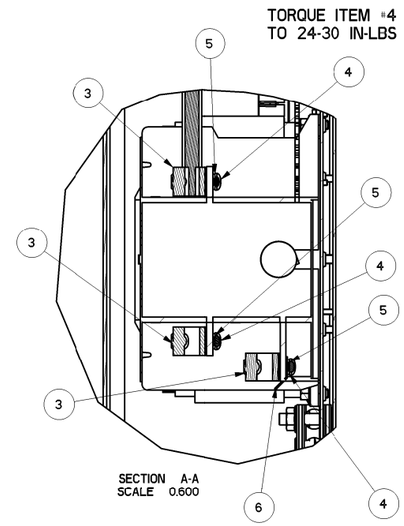

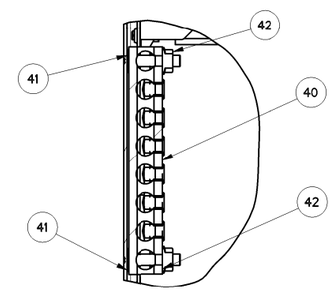

	ITEM #	PART #	QTY	DESCRIPTION
	1	0L2910	1	XFRSW HSB 100A 2P 250V
	2	074908	6	SCREW HHTT M5-0.8 X 10 BP
	3	077033	6	LUG SLDLSS 1/0-#14X9/16 AL/CU
	4	0G7624	6	SCREW PPHM #10-32 X 5/16
	5	022152	6	WASHER LOCK #10
	6	G074138	1	LUG DIS QK NI-S 10X45 DEG BR/T
	7	0E7886H	1	CB 0100A 2P 240V S B02 LB
	8	0E7890	1	BRKT CB MTG BACK
	9	0G5780A	1	ASSY WIRE 2AWG 5.375" #N1A BLK
	10	0G5780B	1	ASSY WIRE 2AWG 6.875" #N2A BLK
	11	0A1495	8	SCREW HHTT M4-0.7 X 10 BP
	12	0H7917	1	DECAL CUSTOMER CONN RTS
**	13	0K0103	1	RELAY PNL 12VDC DPDT 10A@240VA
**	14	0D2572	1	FUSEBLOCK 30A 600V 3POS W/SQ
	15	073590A	3	FUSE 5A X BUSS
**	16	0D7393T	1	TERM BLOCK 3P UL 12-20AWG
	17	0F2659	2	SCREW HHTT M3-0.5 X 6 BP
	18	0L3068	2	SCREW THTT M3-0.5 X 25 ZP
	19	0K0108	1	ASSY-NEUT BLK 100A
	20	090388	2	SCREW HHTT M6-1.0 X 12 ZINC
	21	026902	1	SCREW HHTT #8-32 X 1/4 CZ
	22	0K01120ALOR	1	ENCLOSURE 100/200A XFER SW_RAW
	23	0K01130ALOR	1	COVER 100A XFER SWITCH_INST_RAW
	24	0K0114	1	SUBPLATE,100/200A XFER SW
	25	0K11120ALOR	1	COVER INSIDE 100A SE GRAY_RAW
	26	0K1119	1	RISER 100A SERV ENT
*	27	0K1098	1	DECAL RTS TRANSFER SW GENERAC
*	28	0K1736A	1	DECAL,XFER SW SE 100A 120/240
	29	0E3484	1	DECAL WARN MANUAL OPER HANDLE
	30	0F9969	1	DECAL UTILITY DISCONNECT
	31	0K1018	1	DECAL, NEUTRAL CONNECTION
	32	0K1738	1	DECAL TEST SEQUENCE 100-200A SE
	33	0H7274	1	DECAL NEC COMPLIANCE
	34	0D3587	1	DECAL, FUSE REPLACEMENT
	35	0G3259	1	DECAL TERMINAL SHOCK HZD BI
	36	0G3274	1	DECAL LIVE CIRCUIT ENG/FRN/SPN
	37	0H6389	1	DECAL UTILITY LOAD SENSE 240V
	38	0K1167	1	WIRE NEUTRAL TO GROUND CONNECTION
	39	0L6700	1	SCREW THUMB 1/4-20 X 1/2 KNURL
	40	0J8202	1	LUG SLDLSS 2/0-#14X#10-32X.125
	41	026850	2	WASHER LOCK EXT 1/4 STL
	42	0G8411	6	NUT HEX FL WHIZ 1/4-20
	43	085889	1	NUT HEX 1/4-20 SS
	44	022473	4	WASHER FLAT 1/4-M6 ZINC
	45	0E6193	1	BRACKET, ARM EXTENDER
	46	0D6162	2	RIVET POP .156 X .362 AL
	47	0E6155	1	PIN ARM EXTENDER
	48	0L3123	1	ASSY SMART AC MOD
	49	0H7270	1	CHANNEL SNAPTRACK 76.2 X 101.2
	50	0L6699	1	NUT TRIC 1/4-20 ALUM
	51	0L3246	1	WIRE HARNESS 100/200A RTS

*-SERIAL NUMBER AND FRONT DECAL PER MODEL
**-SUPPLIED WITH HARNESS ITEM #51

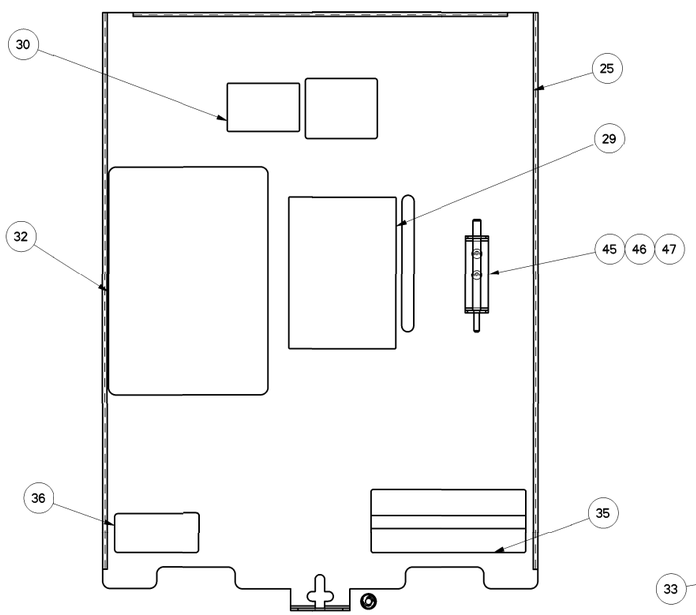

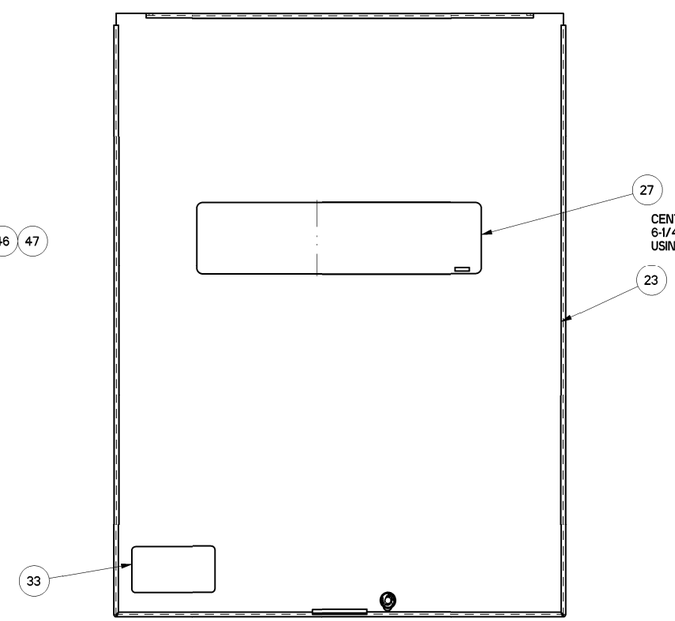

CENTER DECAL APPROXIMATELY
6-1/4" DOWN FROM TOP OF COVER
USING ASSEMBLY TEMPLATE

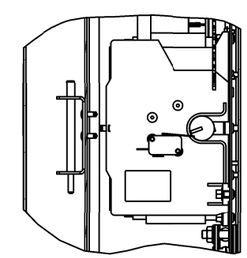

SECTION C-C

PART NUMBER	DESCRIPTION	ITEM # 28	ITEM # 27
0L3215	ASSEMBLY 100A 120/240 SE	0K1736A	PER MODEL
0L3215A	EXPLODED VIEW DRAWING	N/A	N/A
0L3215B	ASSEMBLY 200A 120/240 SE	0K1736A	0K1098
0L3215C	ASSEMBLY 200A 120/240 SE	0J3804A	0K1274

REFERENCE DRAWINGS

0L3242	SCHEMATIC/WIRING DIAGRAMS
0F6778	CARTON 30'5 X 14'2 X 7'8
0H7275	TEST PROC HSB XFRSW
0K0116	KIT ENCL 100 SE AL

DRAWING CREATED FROM PRO/ENGINEER
3D FILE. ECO MODIFICATION TO BE
APPLIED TO SOLID MODEL ONLY.

GENERAL TOLERANCES UNLESS NOTED
ALL XX : ± 0.4 MM
XXX : ± 0.4 MM
XXXX : ± 0.15 MM
ALL ANG : ± 1°
INTERPRET DIM AND TOL
PER ASME Y14.5M-1994

THIRD ANGLE PROJECTION

GENERAC

TITLE
ASSEMBLY DWG 2-POLE
100A 120/240V SE

GENERAC POWER SYSTEMS DWG THE COPYRIGHT OF THIS DRAWING WHICH IS SUPPLIED IN CONFIDENCE AND MUST NOT BE USED FOR ANY PURPOSE OTHER THAN FOR WHICH IT IS SUPPLIED WITHOUT THE EXPRESS WRITTEN CONSENT OF GENERAC POWER SYSTEMS. © GENERAC POWER SYSTEMS 2010

ELECTRONICALLY APPROVED
INSIDE WINDCHILL

ISSUE DATE:

SIZE	CAGE NO	DWG NO	REV
D	N/A	0L3215$	D
SCALE 0.400	WT-KG 22428223.72	SHEET 1 of 1	

GENERAL ASSEMBLY DRAWING