Honeywell

Owner's Manual
For
Automatic Transfer Switch

100 - 200 Amp, Service Entrance / Non-Service Entrance

Model Number

RXSM100A3

(Service Entrance Rated with Utility Service Circuit Breaker)

RXSK100A3

RXSM150A3

(Service Entrance Rated with Utility Service Circuit Breaker)

RXSM200A3

(Service Entrance Rated with Utility Service Circuit Breaker)

RXSK200A3

SERIAL NUMBER: _____

DATE PURCHASED:_____

WWW.HONEYWELLGENERATORS.COM
855-436-4636

Para español , visita: http://www.honeywellgenerators.com/service-support/owner-support
Pour le français, visiter : http://www.honeywellgenerators.com/service-support/owner-support

SAVE THIS MANUAL FOR FUTURE REFERENCE

⚠WARNING

Operating, servicing and maintaining this equipment can expose you to chemicals including engine exhaust, carbon monoxide, phthalates, and lead, which are known to the State of California to cause cancer and birth defects or other reproductive harm. To minimize exposure, avoid breathing exhaust, do not idle the engine except as necessary, service your equipment in a well-ventilated area and wear gloves or wash your hands frequently when servicing your equipment. For more information go to www.P65Warnings.ca.gov. (000393)

Table of Contents

Section 1: Safety

Introduction 1

Safety Rules 1

Safety Symbols and Meanings 1

Electrical Hazards 2

General Hazards 3

Section 2: General Information

Unpacking 5

Equipment Description 5

Transfer Switch Mechanism 5

Utility Service Circuit Breaker (if equipped) 6

Transfer Switch Data Decal 6

Transfer Switch Enclosure 6

Safe Use of Transfer Switch 6

Load Management Options 6

Smart A/C Module (SACM) 6

Smart Management Module (SMM) 7

Application Considerations 7

Section 3: Installation

Introduction to Installation 9

Mounting 9

Open Enclosure 9

Connecting Power Source and Generator Power Supply 10

Connecting Start Circuit Wires 11

Connecting SACM 11

Control of Air Conditioner Load 11

Auxiliary Contact 13

Fault Current Label 13

Section 4: Operation

Functional Tests and Adjustments 15

Manual Operation 15

Close to Utility Source Side 15

Close to Generator Source Side 16

Return to Utility Source Side 16

Voltage Checks 16

Utility Voltage Checks 16

Generator Voltage Checks 16

Generator Tests Under Load 16

Checking Automatic Operation 17

Installation Summary 17

Shutting Generator Down While Under Load Or During A Utility Outage 17

Preparing for Maintenance 18

Testing The SACM 18

SACM Fuse Service 18

Testing The SMM 18

Section 5: Drawings and Diagrams

Installation Drawings 19

No. 0G6832-A: 100A SE & non-SE/150-200A non-SE 19

No.10000012171-A: 150/200A SE 20

Interconnection Drawings 21

No. 10000009574 (Part 1 of 2)—Liquid-Cooled Generator 21

No. 10000009574 (Part 2 of 2)—Liquid-Cooled Generator 22

No. 10000009620, SE and non-SE Rated ATS (1 of 2)—Air-Cooled Generator 23

No. 10000009620, SE and non-SE Rated ATS (2 of 2)—Air-Cooled Generator 24

This page intentionally left blank.

Section 1: Safety

Introduction

Thank you for purchasing a Honeywell product. This unit has been designed to provide high performance, efficient operation, and years of use when maintained properly.

WARNING

Consult Manual. Read and understand manual completely before using product. Failure to completely understand manual and product could result in death or serious injury. (000100a)

Read this manual thoroughly and understand all of the instructions, cautions, and warnings before using this equipment. If any section of the manual is not understood, contact your nearest authorized dealer, or contact Honeywell Customer Service at ***www.honeywellgenerators.com,*** or call 855-436-4636 with any questions or concerns.

The owner is responsible for proper maintenance and safe use of the equipment. Before operating or servicing this transfer switch:

- Study all warnings in this manual and on the product carefully.
- Become familiar with this manual and the unit before use.
- Refer to the installation sections of the manual for instructions on final assembly procedures. Follow the instructions completely.

Save these instructions for future reference. ALWAYS supply this manual to any individual that will use this equipment.

The information in this manual is accurate based on products produced at the time of publication. The manufacturer reserves the right to make technical updates, corrections, and product revisions at any time without notice.

Safety Rules

The manufacturer cannot anticipate every possible circumstance that might involve a hazard. The warnings in this manual, and on tags and decals affixed to the unit are, therefore, not all inclusive. If using a procedure, work method or operating technique that the manufacturer does not specifically recommend, verify that it is safe for others. Also make sure the procedure, work method or operating technique utilized does not render the equipment unsafe.

Safety Symbols and Meanings

Throughout this publication, and on tags and decals affixed to the transfer switch, DANGER, WARNING, CAUTION and NOTE blocks are used to alert personnel to special instructions about a particular operation that may be hazardous if performed incorrectly or carelessly. Observe them carefully. Their definitions are as follows:

DANGER

Indicates a hazardous situation which, if not avoided, will result in death or serious injury.

(000001)

WARNING

Indicates a hazardous situation which, if not avoided, could result in death or serious injury.

(000002)

CAUTION

Indicates a hazardous situation which, if not avoided, could result in minor or moderate injury.

(000003)

NOTE: Notes contain additional information important to a procedure and will be found within the regular text of this manual.

These safety alerts cannot eliminate the hazards that they indicate. Common sense and strict compliance with the special instructions while performing the action or service are essential to preventing accidents.

Electrical Hazards

DANGER

Electrocution. High voltage is present at transfer switch and terminals. Contact with live terminals will result in death or serious injury.

(000129)

DANGER

Electrocution. Water contact with a power source, if not avoided, will result in death or serious injury.

(000104)

DANGER

Electrocution. In the event of electrical accident, immediately shut power OFF. Use non-conductive implements to free victim from live conductor. Apply first aid and get medical help. Failure to do so will result in death or serious injury. (000145)

DANGER

Electrical backfeed. Use only approved switchgear to isolate generator from the normal power source. Failure to do so will result in death, serious injury, and equipment damage.

(000237)

DANGER

Electrocution, equipment and property damage. Handle transfer switches carefully when installing. Never install a damaged transfer switch. Doing so could result in death or serious injury, equipment and property damage. (000195)

DANGER

Electrocution. Turn utility supply OFF before working on utility connections of the transfer switch. Failure to do so will result in death or serious injury. (000123)

DANGER

Electrocution. Do not disable or modify the connection box door safety switch. Doing so will result in death or serious injury.

(000157)

DANGER

Automatic start-up. Disconnect utility power and render unit inoperable before working on unit. Failure to do so will result in death or serious injury.

(000191)

DANGER

Equipment malfunction. Installing a dirty or damaged transfer switch will cause equipment malfunction and will result in death or serious injury.

(000119)

WARNING

Electric shock. Only a trained and licensed electrician should perform wiring and connections to unit. Failure to follow proper installation requirements could result in death, serious injury, and equipment or property damage.

(000155a)

CAUTION

Equipment damage. Verify all conductors are tightened to the factory specified torque value. Failure to do so could result in damage to the switch base.

(000120)

CAUTION

Equipment damage. Perform functional tests in the exact order they are presented in the manual. Failure to do so could result in equipment damage.

(000121)

CAUTION

Equipment damage. Exceeding rated voltage and current will damage the auxiliary contacts. Verify that voltage and current are within specification before energizing this equipment. (000134a)

General Hazards

DANGER

Electrical backfeed. Use only approved switchgear to isolate generator from the normal power source. Failure to do so will result in death, serious injury, and equipment damage.

(000237)

DANGER

Electrocution. High voltage is present at transfer switch and terminals. Contact with live terminals will result in death or serious injury.

(000129)

DANGER

Electrocution. Turn utility supply OFF before working on utility connections of the transfer switch. Failure to do so will result in death or serious injury.

(000123)

DANGER

Electrocution. Water contact with a power source, if not avoided, will result in death or serious injury.

(000104)

DANGER

Electrocution. Do not wear jewelry while working on this equipment. Doing so will result in death or serious injury.

(000188)

DANGER

Electrocution. Only authorized personnel should access transfer switch interior. Transfer switch doors should be kept closed and locked. Failure to do so will result in death or serious injury. (000213)

DANGER

Automatic start-up. Disconnect utility power and render unit inoperable before working on unit. Failure to do so will result in death or serious injury.

(000191)

DANGER

Electrocution. In the event of electrical accident, immediately shut power OFF. Use non-conductive implements to free victim from live conductor. Apply first aid and get medical help. Failure to do so will result in death or serious injury. (000145)

WARNING

Loss of life. This product is not intended to be used in a critical life support application. Failure to adhere to this warning could result in death or serious injury.

(000209b)

WARNING

Equipment damage. This unit is not intended for use as a prime power source. It is intended for use as an intermediate power supply in the event of temporary power outage only. Doing so could result in death, serious injury, and equipment damage.

(000247a)

- Competent, qualified personnel should install, operate and service this equipment. Adhere strictly to local, state and national electrical and building codes. When using this equipment, comply with regulations established by the National Electrical Code (NEC), CSA Standard; the Occupational Safety and Health Administration (OSHA), or the local agency for workplace health and safety.
- If working on this equipment while standing on metal or concrete, place insulative mats over a dry wood platform. Work on this equipment only while standing on such insulative mats.
- Never work on this equipment while physically or mentally fatigued.
- Any voltage measurements should be performed with a meter that meets UL3111 safety standards, and meets or exceeds overvoltage class CAT III.

This page intentionally left blank.

Section 2: General Information

Unpacking

Carefully unpack the transfer switch. Inspect closely for any damage that might have occurred during shipment. The purchaser must file with the carrier any claims for loss or damage incurred while in transit.

Check that all packing material is completely removed from the switch prior to installation.

Equipment Description

This automatic transfer switch is used for transferring electrical load from a utility (normal) power source to a generator (standby) power source. Transfer of electrical loads occurs automatically when the utility power source has failed or is substantially reduced and the generator source voltage and frequency have reached an acceptable level. The transfer switch prevents electrical feedback between two different power sources (such as the utility and generator sources) and, for that reason, codes require it in all standby electric system installations.

The transfer switch consists of a transfer mechanism, utility service disconnect circuit breaker (if equipped), and a Smart A/C module incorporating fuses and two terminal blocks for transfer switch connections.

Transfer Switch Mechanism

See ***Figure 2-1***. This switch is used with a single-phase system when the single-phase neutral line is to be connected to a neutral lug and is not to be switched.

Solderless, screw-type terminal lugs are standard.

The conductor size range is as follows:

Switch Rating	Wire Range	Conductor Tightening Torque
100A	#14-1/0 AWG (Cu/Al)	50 **in-lbs** (5.6 Nm)
150/200A	#6-250 MCM (Cu/Al)	275 **in-lbs** (31 Nm)

This transfer switch is suitable for control of motors, electric discharge lamps, tungsten filament and electric heating equipment where the sum of motor full load ampere ratings and the ampere ratings of other loads do not exceed the ampere rating of the switch and the tungsten load does not exceed 30 percent of the switch rating.

This UL listed transfer switch is for use in optional standby systems only (NEC article 702).

A 100A rated switch is suitable for use on circuits capable of delivering not more than 10,000 RMS symmetrical amperes, 250 VAC maximum, when protected by a 100A maximum circuit breaker (Siemens types QP or BQ) or 150A maximum circuit breaker (Square D Q2, Westinghouse CA-CAH, General Electric TQ2 and Siemens QJ2).

A 200A rated switch is suitable for use on a circuit capable of 22,000 RMS symmetrical amperes, 240 VAC when protected by a circuit breaker without an adjustable short time response or by fuses.

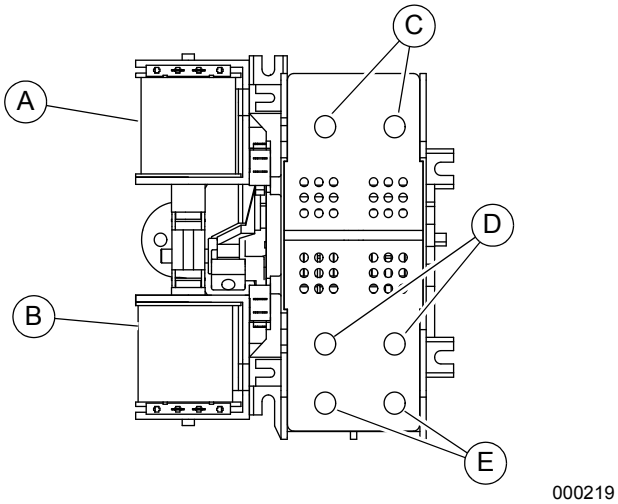

Figure 2-1. Typical Single-Phase ATS Transfer Mechanism

A	Utility Closing Coil
B	Generator Closing Coil
C	Utility Lugs (N1 & N2)
D	Generator Lugs (E1 & E2)
E	Load Lugs (T1 & T2)

Utility Service Circuit Breaker (if equipped)

The utility service and generator disconnect circuit breakers for 100 amp models are:

- Type BQ, 2-pole
- 10,000 A/C
- 120/240VAC, 100A
- 50/60 Hertz
- Wire range: #1 - #8 AWG (Cu/Al)
- The conductor tightening torque is 50 **in-lbs.** (5.6 Nm).

The utility service circuit breakers for 150/200 amp models are:

- Type 225AF, 2-pole
- 22,000 A/C
- 120/240VAC, 150A/200A
- 50/60 Hertz
- Wire range:
  - Line: 300 MCM - 6 STR (Cu/Al)
  - Load - ATS: 250 MCM - 6 STR (Cu/Al)
- The conductor tightening torque is:
  - Line: 375 **in-lbs** (42.4 Nm)
  - Load - ATS: 275 **in-lbs.** (31 Nm)

The utility service circuit breakers for Siemens 150/200 amp models are:

- Siemens, Type QN, 2-pole
- 10,000 A/C
- 120/240VAC, 150A/200A
- 50/60 Hertz
- Wire range:
  - Line: 300 MCM - 1 STR (Cu/Al)
  - Load - ATS: 250 MCM - 6 STR (Cu/Al)
- The conductor tightening torque is:
  - Line: 250 **in-lbs** (28.2 Nm)
  - Load - ATS: 275 **in-lbs.** (31 Nm)

Transfer Switch Data Decal

A data decal is permanently affixed to the transfer switch enclosure. Use this transfer switch only with the specific limits shown on the data decal and on other decals and labels that may be affixed to the switch. This will prevent damage to equipment and property.

When requesting information or ordering parts for this equipment, make sure to include all information from the data decal.

For future reference, record the Model and Serial numbers in the space provided on the front cover of this manual.

Transfer Switch Enclosure

The standard switch enclosure is a National Electrical Manufacturer's Association (NEMA) and UL 3R type. UL and NEMA 3R (indoor/outdoor rated) type enclosures primarily provide a degree of protection against falling rain and sleet; are undamaged by the formation of ice on the enclosure.

Safe Use of Transfer Switch

⚠WARNING

Consult Manual. Read and understand manual completely before using product. Failure to completely understand manual and product could result in death or serious injury. (000100a)

Before installing, operating or servicing this equipment, read the ***Safety Rules*** carefully. Comply strictly with all ***Safety Rules*** to prevent accidents and/or damage to the equipment. The manufacturer recommends that a copy of the ***Safety Rules*** be posted near the transfer switch. Also, be sure to read all instructions and information found on tags, labels and decals affixed to the equipment.

Two publications that outline the safe use of transfer switches are the following:

- NFPA 70; National Electrical Code
- UL 1008: Standard for Safety—Automatic Transfer Switches

NOTE: It is essential to use the latest version of any standard to guarantee correct and current information.

Load Management Options

Load management systems are designed to work together to prevent a generator from being overloaded by large appliance loads. A Smart A/C Module (SACM) is provided as standard equipment with this switch. An optional Smart Management Module (SMM) is also available.

Smart A/C Module (SACM)

Up to four air conditioner loads can be managed by the SACM. The SACM manages the loads by "shedding" the connected loads in the event of a drop in generator frequency (overload). Loads to be "shed" are in 4 priority levels on the module.

See ***Figure 2-2***. Priorities A/C 1-4 (A) have connections for an air conditioner. To control an air conditioner, no additional equipment is required. Internal normally closed relays interrupt the 24 VAC thermostat control signal to disable the air conditioner load.

Four LEDs, located on the SACM (B), illuminate when a load is connected and powered.

See ***Figure 2-2***. The SACM has a test button (C) used to simulate an overload condition. This button operates even when the transfer signal is inactive. The Generator Control Wiring is connected to terminals (D).

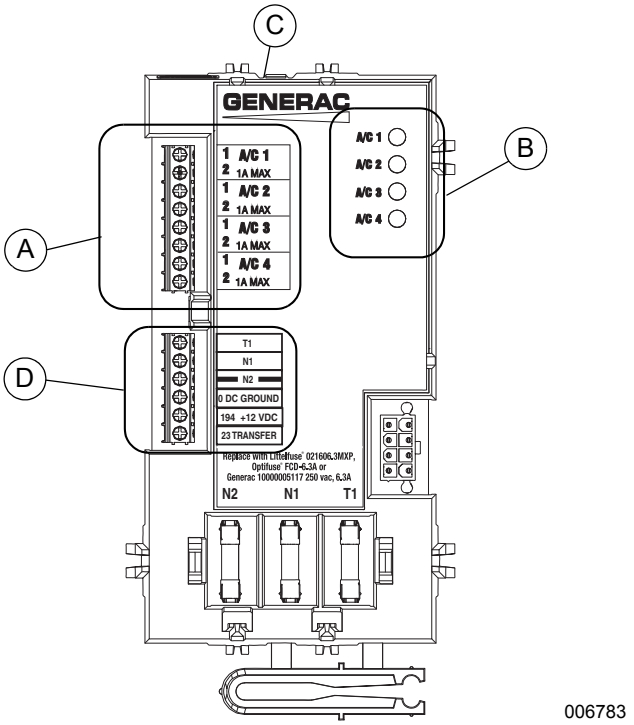

Figure 2-2. Smart A/C Module (SACM)

Smart Management Module (SMM)

(sold separately)

Any loads, including central air conditioners, can be managed using a Smart Management Module (SMM). The system can accommodate up to eight individual SMMs.

NOTE: SMMs are self-contained and have individual built-in controllers.

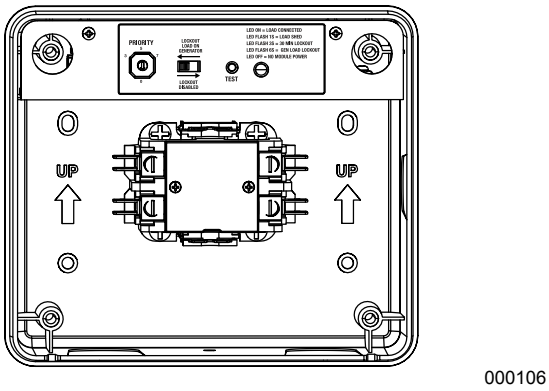

Figure 2-3. Smart Management Module (SMM)

Application Considerations

Generator overload condition is determined by generator frequency. Loads are shed when frequency is less than 58 Hz for three seconds or less than 50 Hz for ½ second (for 60 Hz systems).

The SACM can be used in conjunction with individual SMMs to manage a combined total of eight loads.

- Use Priorities A/C 1-4 on the SACM as the top priorities, then up to four SMMs as Priorities 5-8.
- Use only select A/C priorities on the SACM as the top priorities, then use additional SMMs as the remaining priorities.
- A SMM can share a priority with an A/C priority on the SACM provided the generator is sized to handle the combined surge load from both appliances. Sharing priorities can allow up to 12 loads to be managed in a properly sized system.

In any combination of modules, the recovery times after a loss of utility power or shutdown due to overload are shown in Table 1: ***Priority Settings***.

Table 1. Priority Settings

Priority	Recovery Time	SACM	SSMM
1	5 minutes	Yes	Yes
2	5 minutes 15 seconds	Yes	Yes
3	5 minutes 30 seconds	Yes	Yes
4	5 minutes 45 seconds	Yes	Yes
5	6 minutes	NA	Yes
6	6 minutes 15 seconds	NA	Yes
7	6 minutes 30 seconds	NA	Yes
8	6 minutes 45 seconds	NA	Yes

Refer to the SMM Owner's/Installation Manual for detailed characteristics and specifications of that product.

This page intentionally left blank.

Section 3: Installation

Introduction to Installation

This equipment has been wired and tested at the factory. Installing the switch includes the following procedures:

- Mounting the enclosure.
- Connecting power source and load leads.
- Connecting the generator start and sensing circuit.
- Connecting any auxiliary contact (if needed).
- Testing functions.

Mounting

Mounting dimensions for the transfer switch enclosure are in this manual. Enclosures are typically wall-mounted. See ***Drawings and Diagrams***.

DANGER

Equipment malfunction. Installing a dirty or damaged transfer switch will cause equipment malfunction and will result in death or serious injury.

(000119)

This transfer switch is mounted in a UL type 3R enclosure. It can be mounted outside or inside and should be based on the layout of installation, convenience and proximity to the utility supply and load center.

Install the transfer switch as close as possible to the electrical loads that are to be connected to it. Mount the switch vertically to a rigid supporting structure. To prevent switch distortion, level all mounting points. If necessary, use washers behind mounting holes to level the unit.

Open Enclosure

See ***Figure 3-1***. First, remove outer cover (A):

1. Remove thumb screw (B).
2. Slide slot (C) over retention tab.
3. Lower cover until clear of top flange (D), and pull away from enclosure.

Remove inner panel (E):

4. Loosen nut (F) until it clears t-slot (H) in inner panel.
5. Grasp inner panel at two cutouts (G—left and right). Tilt inner panel as shown, passing nut through t-slot.
6. Lower inner panel until clear of two retention slots (J—left and right sides), and pull away from enclosure.

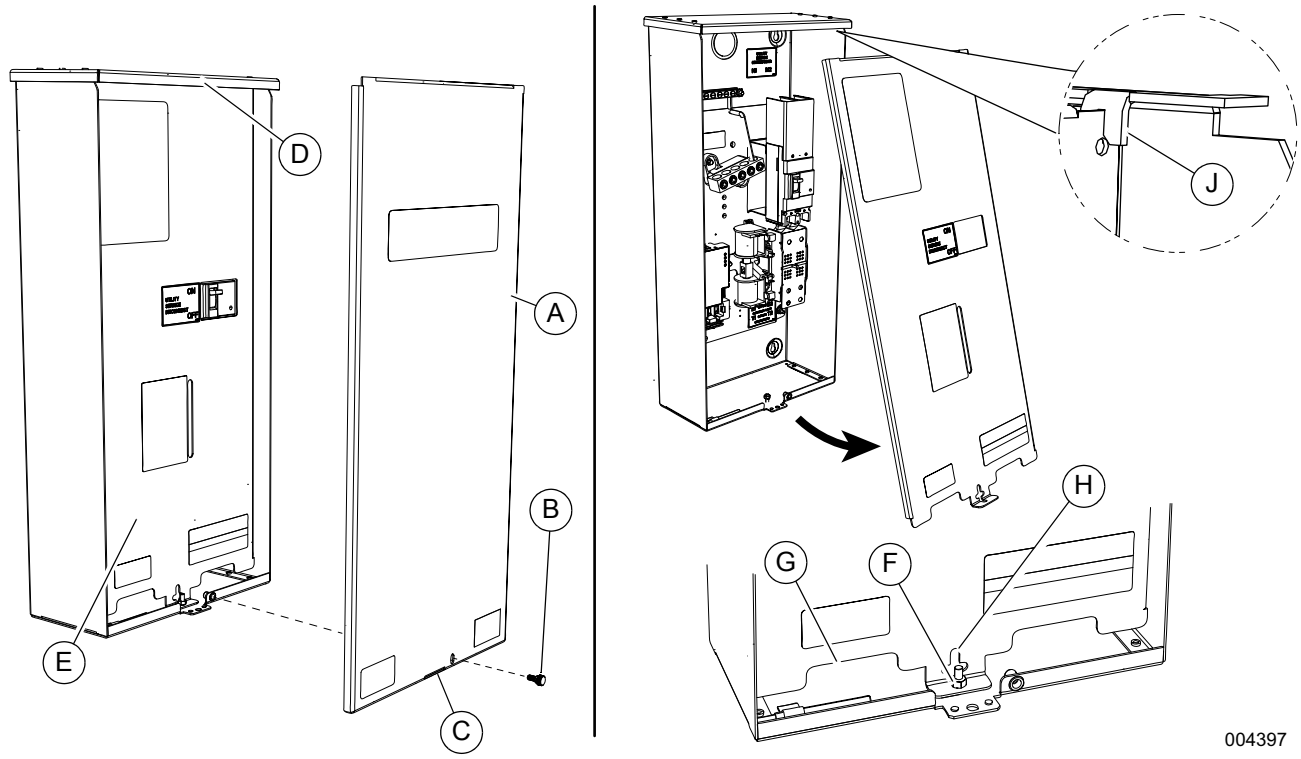

Figure 3-1. Open Enclosure

Connecting Power Source and Generator Power Supply

DANGER

Electrocution. Turn utility and emergency power supplies to OFF before connecting power source and load lines. Failure to do so will result in death or serious injury. (000116)

Installation and interconnection diagrams are provided in this manual.

NOTE: All installations must comply with national, state and local codes. It is the responsibility of the installer to perform an installation that will pass the final electrical inspection.

1. Connect utility supply at the utility service disconnect circuit breaker terminals N1 and N2. Follow torque specifications listed on the circuit breaker.
2. See ***Figure 3-2***. Connect utility neutral and ground to the Upper Neutral and Ground terminals. Neutral and Ground terminals are bonded to each other with a jumper wire (A).

   NOTE: Neutral to Ground jumper wire (A) is provided for use if required by local codes.
3. Connect generator to the generator terminals (E1 and E2) on the transfer mechanism.
4. Connect the generator neutral wire to the lower neutral lug.

   IMPORTANT NOTE: A jumper wire (B) bonds the upper and lower Neutral lugs. NEVER remove this wire.
5. Connect a subpanel supply to lower T1 and T2 Terminals. Connect subpanel Neutral and Ground to lower Neutral and Ground bars.

Conductor sizes must be adequate to handle the maximum current to which they will be subjected, based on the 75°C column of tables, charts, etc. used to size conductors. The installation must comply fully with all applicable codes, standards and regulations.

Knockouts into the transfer switch can be made in the field as needed for entry of power cables and conduit. Conduit entry shall maintain the proper wire bending spaces required by Tables 312.6 (A) and (B) in the NEC. Conduits should be arranged to provide separation between the Utility and Generator supply conductors inside the enclosure.

For transfer switches installed in wet locations, power cables or conduits entering above the level of uninsulated live parts shall use fittings listed for use in wet locations as required by 312.2 in the NEC.

NOTE: If aluminum conductors are used, apply corrosion inhibitor to conductors. After tightening terminal lugs, carefully wipe away any excess corrosion inhibitor.

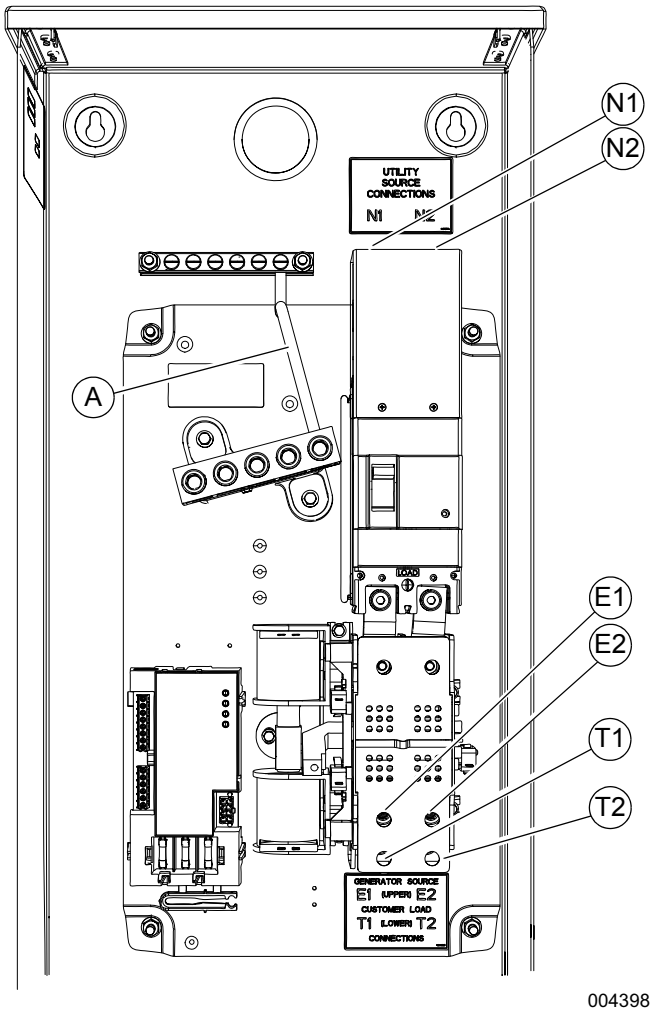

Figure 3-2. Wiring Connections

Tighten terminal lugs to the torque values as noted on the decal located on the inside of the door. After tightening terminal lugs, carefully wipe away any excess corrosion inhibitor.

CAUTION

Equipment damage. Verify all conductors are tightened to the factory specified torque value. Failure to do so could result in damage to the switch base.

(000120)

Connecting Start Circuit Wires

Control system interconnections consist of N1, N2, and T1, and leads 23, 0, and 194 (see ***Figure 3-3***).

NOTE: Generac Type TC-ER-JP power and control tray cable can be installed as permitted by the 2017 NEC. Type TC-ER-JP cable contains color-coded power and control conductors.

The generator control wiring is a Class 1 signaling circuit. Reference instruction manual of specific engine generator for wiring connection details. Screw heads are straight bladed and cross-bladed, and should be tightened to 3.5 in-lb (0.4 Nm).

Recommended wire gauge sizes depend on wire length as specified in the following chart: Consult factory if you are operating more than one transfer switch and SACM.

Recommended Wire Size	Maximum Wire Length (One transfer switch and load shed module)
No. 18 AWG	1–115 ft (0.3–35 m)
No. 16 AWG	116–185 ft (36–56 m)
No. 14 AWG	186–295 ft (57–89 m)
No. 12 AWG	296–460 ft (90–140 m)

Exception: Conductors of AC and DC circuits, rated 1000 volts nominal, or less, shall be permitted to occupy the same equipment, cable, or conduit. All conductors shall have an insulation rating equal to at least the maximum circuit voltage applied to any conductor within the equipment, cable, or conduit. See NEC 300.3(C)(1).

Connecting SACM

See ***Figure 3-3***. The SACM can control an air conditioner (24 VAC) directly.

Control of Air Conditioner Load

1. Route the thermostat cable (from the furnace/ thermostat to the outdoor air conditioner unit) to the transfer switch.
2. Connect the wire to the terminal strip terminals (A/C 1) on the SACM as shown in ***Figure 3-3***. These are normally closed contacts which open upon load shed conditions. Route thermostat wire away from high voltage wires.
3. If required, connect additional air conditioners to the terminal strip terminals (A/C 2-4).

Contact Ratings	
A/C 1-4	24 VAC, 1.0 Amp Max

NOTE: These instructions are for a typical air conditioner installation. Control of certain heat pumps and 2-stage air conditioners may require special connections or the use of SMMs to control the loads.

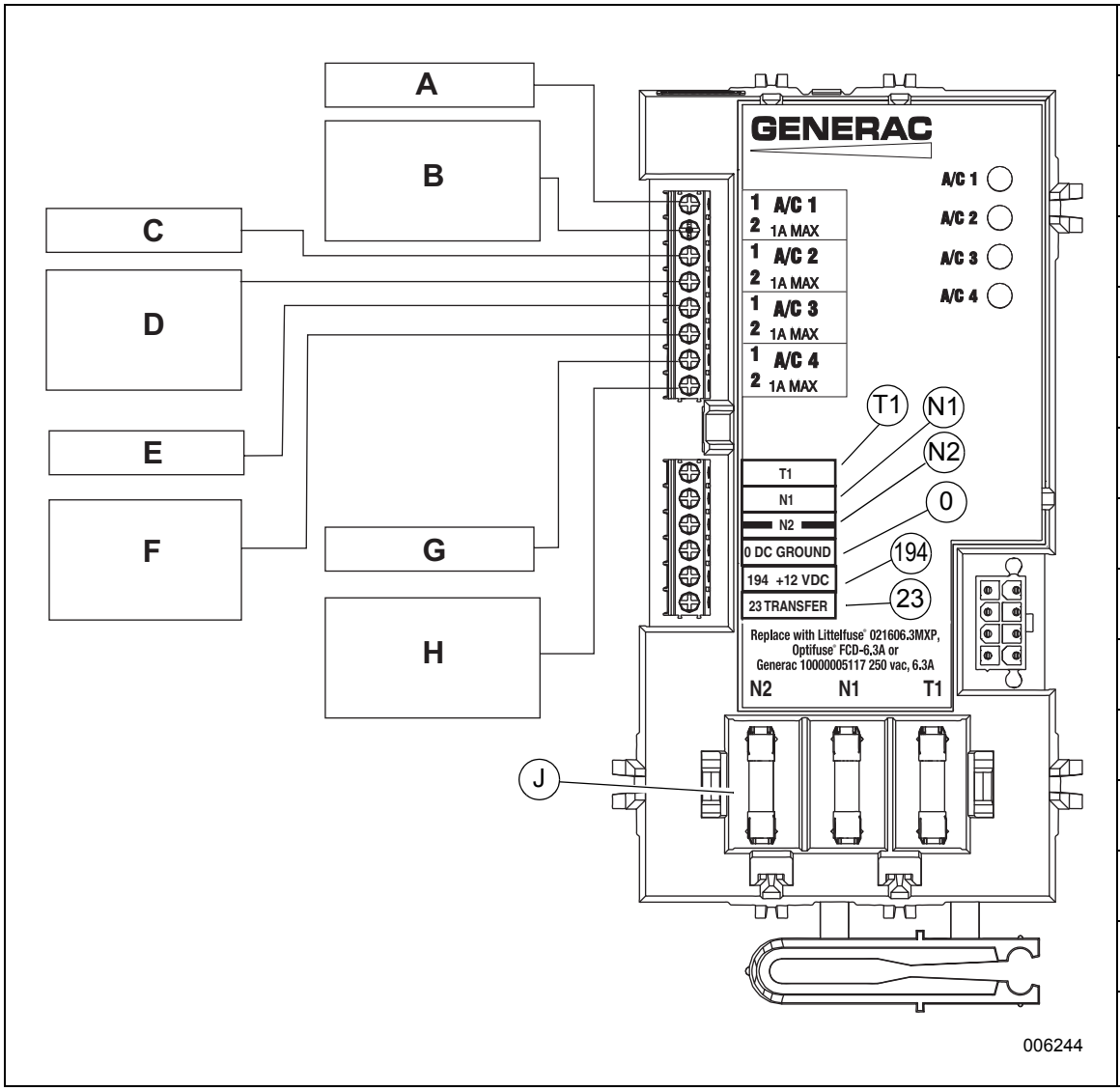

A	Thermostat 1
B	Air Conditioner 1
C	Thermostat 2
D	Air Conditioner 2
E	Thermostat 3
F	Air Conditioner 3
G	Thermostat 4
H	Air Conditioner 4
T1 (fused)	Battery Charge
N1 (fused)	Utility Sense
N2 (fused)	Utility Sense
0 DC	Ground
194	+ 12 VDC
23	Transfer Control
J	240 VAC, 6.3A Fuses

Figure 3-3. Typical SACM Connections

Auxiliary Contact

See ***Figure 3-4***. If desired, there is one normally-closed Auxiliary Contact (A) on the transfer switch to operate customer accessories, remote advisory lights, or remote annunciator devices. A suitable power source must be connected to the common terminal. If needed, an extra auxiliary contact can be added.

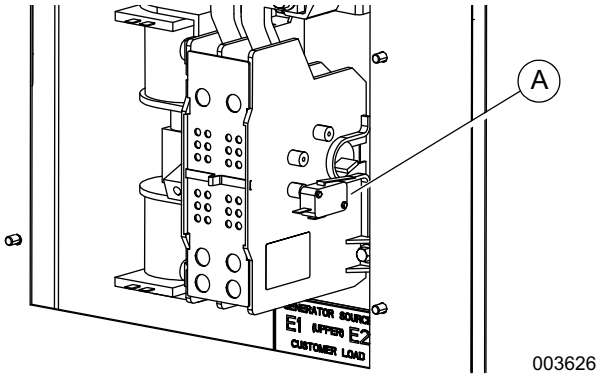

Figure 3-4. Auxiliary Contact

The auxiliary contact is normally closed when the transfer switch is in utility mode. The contacts will open when the transfer switch is in the standby power mode.

NOTE: Auxiliary Contact is rated 10 amps at 125 or 250 volts AC, and 0.6 amps at 125 volts DC.

⚠CAUTION

Equipment damage. Exceeding rated voltage and current will damage the auxiliary contacts. Verify that voltage and current are within specification before energizing this equipment. (000134a)

Fault Current Label

See ***Figure 3-5***. A Fault Current Identification Label is provided in the bag containing the unit Owner's Manual and transfer switch manual operating handle. The 2017 NEC requires that the short-circuit current rating of the transfer equipment, based on the type of overcurrent protective device protecting the transfer equipment, be field marked on the exterior of the transfer equipment. For NEC compliance, verify the required short-circuit current rating of the transfer switch before installation.The completed label provides the local AHJ (Authority Having Jurisdiction) with the information he or she may require during inspection.

Apply the label to the exterior of the transfer switch enclosure. Use a pen to fill in the required information, and then cover the label with the clear protective decal.

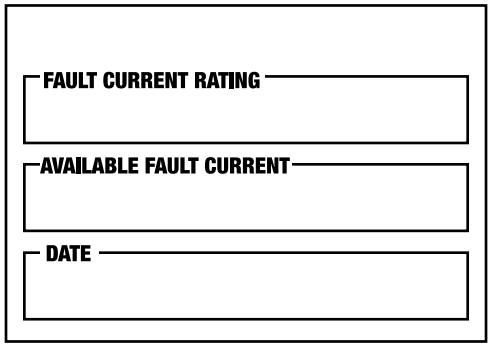

Figure 3-5. Fault Current Label

This page intentionally left blank.

Section 4: Operation

Functional Tests and Adjustments

Following transfer switch installation and interconnection, inspect the entire installation carefully. A competent, qualified electrician should inspect it. The installation should comply strictly with all applicable codes, standards, and regulations. When absolutely certain the installation is proper and correct, complete a functional test of the system.

⚠CAUTION

Equipment damage. Perform functional tests in the exact order they are presented in the manual.
Failure to do so could result in equipment damage.

(000121)

IMPORTANT: Before proceeding with functional tests, read and make sure all instructions and information in this section is understood. Also read the information and instructions of labels and decals affixed to the switch. Note any options or accessories that might be installed and review their operation.

Manual Operation

⚠DANGER

Electrocution. Do not manually transfer under load. Disconnect transfer switch from all power sources prior to manual transfer. Failure to do so will result in death or serious injury, and equipment damage.

(000132)

See ***Figure 4-1***. A manual handle (B) is shipped with the transfer switch manual. Manual operation must be checked BEFORE the transfer switch is operated electrically. To check manual operation, proceed as follows:

1. Verify the generator is in the OFF mode.
2. Turn OFF both utility (service disconnect circuit breaker) and emergency (generator main line circuit breaker) power supplies to the transfer switch.
3. Note position of transfer mechanism main contacts (A) by observing the movable contact carrier arm. This can be viewed through the long narrow slot in the inside cover. The top of the movable contact carrier arm is yellow to be easily identified.

- Manual operation handle in the UP position - LOAD terminals (T1, T2) are connected to utility terminals (N1, N2).
- Manual operation handle in the DOWN position - LOAD terminals (T1, T2) are connected to EMERGENCY terminals (E1, E2).

⚠CAUTION

Equipment damage. Do not use excessive force while manually operating the transfer switch. Doing so could result in equipment damage.

(000122)

Close to Utility Source Side

Before proceeding, verify the position of the switch by observing the position of manual operation handle in ***Figure 4-1***. If the handle is UP, the contacts are closed in the utility (normal) position, no further action is required. If the handle is DOWN, proceed with Step 1.

1. With the handle inserted into the movable contact carrier arm, move handle UP. Be sure to hold on to the handle as it will move quickly after the center of travel.
2. Remove manual operating handle from movable contact carrier arm. Return handle to storage bracket.

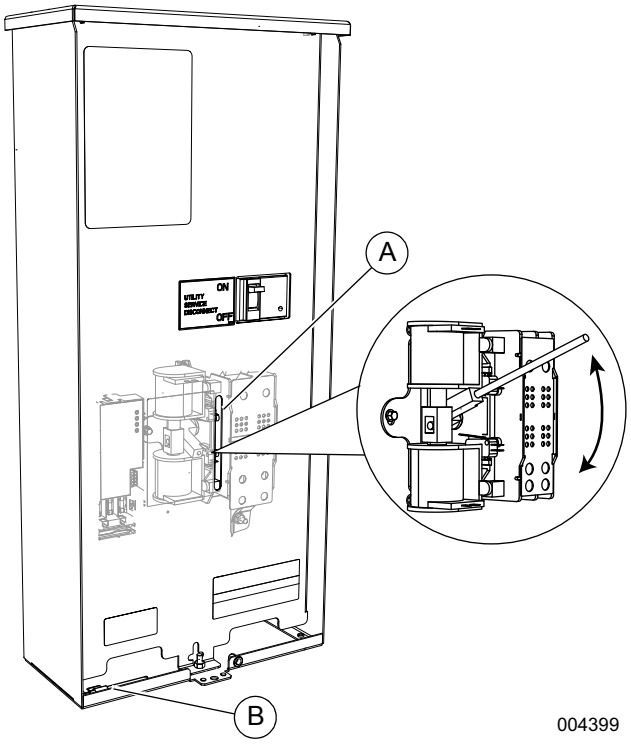

Figure 4-1. Manual Operation

Close to Generator Source Side

Before proceeding, verify the position of the switch by observing the position of the manual operation handle in *Figure 4-1*. If the handle is DOWN, the contacts are closed in the generator (standby) position. No further action is required. If the handle is UP, proceed with Step 1.

1. With the handle inserted into the movable contact carrier arm, move the handle DOWN. Be sure to hold on to the handle as it will move quickly after the center of travel.
2. Remove manual operating handle from movable contact carrier arm. Return handle to storage bracket.

Return to Utility Source Side

1. Manually actuate switch to return manual operating handle to the UP position.
2. Remove manual operating handle from movable contact carrier arm. Return handle to storage bracket.

Voltage Checks

NOTE: Use the Digital Multimeter (DMM) LowZ low input impedance setting to collect accurate voltage measurements. LowZ eliminates the possibility of inaccurate ghost voltage readings, also known as phantom voltage or stray voltage readings. Refer to the DMM manufacturer's literature for additional information.

Utility Voltage Checks

1. Turn ON the utility power supply to the transfer switch using the utility service disconnect circuit breaker.

DANGER

Electrocution. High voltage is present at transfer switch and terminals. Contact with live terminals will result in death or serious injury.

(000129)

2. With an accurate AC voltmeter, check for correct voltage. Measure across ATS terminal lugs N1 and N2; N1 to NEUTRAL and N2 to NEUTRAL.

DANGER

Electrocution. Turn utility supply OFF before working on utility connections of the transfer switch. Failure to do so will result in death or serious injury.

(000123)

Generator Voltage Checks

1. On the generator panel, select the MANUAL mode of operation. The generator should crank and start.
2. Let the generator stabilize and warm up at no-load for at least five minutes.
3. Set the generator's main circuit breaker (CB1) to its ON or CLOSED position.

DANGER

Electrocution. High voltage is present at transfer switch and terminals. Contact with live terminals will result in death or serious injury.

(000129)

4. With an accurate AC voltmeter and frequency meter, check the no-load, voltage and frequency. Measure across ATS terminal lugs E1 to E2; E1 to NEUTRAL and E2 to NEUTRAL.

Frequency	60–62 Hz
Terminals E1 to E2	240–246 VAC
Terminals E1 to NEUTRAL	120–123 VAC
Terminals E2 to NEUTRAL	120–123 VAC

5. When certain that generator supply voltage is correct and compatible with transfer switch ratings, turn OFF the generator supply to the transfer switch.
6. Set the generator main circuit breaker (CB1) to OFF or OPEN.
7. On the generator panel, select the OFF mode to shut down the generator.

NOTE: Do NOT proceed until generator AC output voltage and frequency are correct and within stated limits. If the no-load voltage is correct but no-load frequency is incorrect, the engine governed speed may require adjustment. If no-load frequency is correct but voltage is not, the voltage regulator may require adjustment.

Generator Tests Under Load

1. Set the generator main circuit breaker to OFF or OPEN.
2. Set the utility service disconnect circuit breaker of the transfer switch to OFF or OPEN, and turn OFF or OPEN all load circuit breakers.
3. Manually actuate the transfer switch main contacts to the emergency (standby) position. See ***Manual Operation***.
4. To start the generator, select the MANUAL mode of operation. When engine starts, let it stabilize for a few minutes, and close lid (if applicable).

5. Set the generator main circuit breaker to ON or CLOSED. The generator now powers all LOAD circuits. Check generator operation under load as follows:
   - Turn on electrical loads to the full rated wattage/amperage capacity of the generator. DO NOT OVERLOAD.
   - With maximum rated load applied, check voltage and frequency across transfer switch terminals E1 and E2. Voltage should be greater than 230 VAC (240 VAC system); frequency should be greater than 59 Hz.
   - Verify that the gas pressure remains within acceptable parameters (see the generator Installation manual).
   - Let the generator run under rated load for at least 30 minutes. With unit running, watch for unusual noises, vibration, or overheating that might indicate a problem.
6. When checkout under load is complete, set main circuit breaker of the generator to the OFF or OPEN position.
7. Let the generator run at no-load for several minutes. Then, shut down by selecting the OFF mode.
8. Move the main switch contacts back to the utility position.

NOTE: See ***Manual Operation***. Handle and operating lever of transfer switch should be in down position.

9. Set the utility service disconnect circuit breaker of the transfer switch to ON or CLOSED.
10. The system is now set for fully automatic operation.

Checking Automatic Operation

To check the system for proper automatic operation, proceed as follows:

1. Verify generator is OFF.
2. Set the utility service disconnect circuit breaker of the transfer switch to OFF or OPEN.
3. Verify switch is de-energized.
4. Install front cover of the transfer switch.
5. Set the utility service disconnect circuit breaker of the transfer switch to ON or CLOSED.
6. Set the generator main circuit breaker to ON.
7. On the generator panel, select AUTO. The system is now ready for automatic operation.
8. Set the utility service disconnect circuit breaker of the transfer switch to OFF or OPEN.

With the generator ready for automatic operation, the engine should crank and start when the utility source power is turned OFF after a five second delay (factory default setting). After starting, the transfer switch should connect load circuits to the standby side after a five (5) second warm-up delay. Let the system operate through its entire automatic sequence of operation.

NOTE: Timer durations may differ between generators and settings.

With the generator running and loads powered by generator AC output, set the utility service disconnect circuit breaker of the transfer switch to ON or CLOSED. The following should occur:

- After approximately 15 seconds, the switch should transfer loads back to the utility power source.
- Approximately one minute after re-transfer, the generator should shut down.

With the generator in the AUTOMATIC mode, the system is now set for fully automatic operation.

Installation Summary

1. Verify the installation has been properly performed as outlined by the manufacturer and that it meets all applicable laws and codes.
2. Verify proper operation of the system as outlined in the appropriate installation and owner's manuals.
3. Educate the end-user on the proper operation, maintenance and service call procedures.

NOTE: The Utility Power Circuit Breaker in the transfer switch must be turned OFF to simulate a utility outage. Shutting off the main disconnect in a subpanel connected to the transfer switch will NOT simulate an outage.

Shutting Generator Down While Under Load Or During A Utility Outage

⚠DANGER

Automatic start-up. Disconnect utility power and render unit inoperable before working on unit. Failure to do so will result in death or serious injury.

(000191)

IMPORTANT NOTE: To avoid equipment damage, follow these steps, in order, during utility outages. Shutdowns may be required during utility outages to perform routine maintenance or to conserve fuel.

To turn the generator OFF:

1. Set the main utility disconnect to OFF (OPEN).
2. Set the generator MLCB (generator disconnect) to OFF (OPEN).
3. Allow the generator to run for a cool-down period of approximately one minute.
4. At the controller, set the generator to OFF.
5. Remove the 7.5A fuse from the controller.

To turn the generator back ON:

1. Install 7.5A fuse in controller.

2. Confirm the generator MLCB (generator disconnect) is OFF (OPEN).
3. At the controller, set the generator to AUTO mode.
4. Generator will start and run. Allow generator to run and warm up for a few minutes.
5. Set the MLCB (generator disconnect) to ON (CLOSED).
6. Set the main utility disconnect to ON (CLOSED).

The system now operates in automatic mode.

Preparing for Maintenance

DANGER

Automatic start-up. Disconnect utility power and render unit inoperable before working on unit. Failure to do so will result in death or serious injury.

(000191)

To turn the generator OFF:

1. At the controller, turn the generator OFF.
2. Set the MLCB (generator disconnect) on the generator to OFF (OPEN).
3. Turn the main utility disconnect OFF (OPEN).
4. Remove 7.5A fuse from the controller.
5. Follow maintenance procedure(s).

To turn the generator back ON:

1. Turn the main utility disconnect ON (CLOSED).
1. Install 7.5A fuse in controller.
2. Put the generator into AUTO mode.
3. Set the MLCB (generator disconnect) on the generator to ON (CLOSED).

The system is now in automatic mode.

Testing The SACM

A “Test” pushbutton is provided on top of the SACM to test the operation of the load shed functions. The test pushbutton will work when the ATS is in the utility or the generator position.

1. Turn on the utility supply to the ATS.
2. Verify managed loads are powered and all LEDs illuminate on SACM.
3. Press the TEST button on the SACM.
4. Verify that all of the connected loads to be “shed” become disabled.
5. After five (5) minutes verify A/C 1 is energized and Status LED A/C 1 is ON.
6. After another 15 seconds, verify A/C 2 is energized and Status LED A/C 2 is ON.
7. After another 15 seconds, verify Load A/C 3 is energized and Status LED Load A/C 3 is ON.
8. After another 15 seconds, verify A/C 4 is energized and Status LED A/C 4 is ON.

SACM Fuse Service

See ***Figure 4-2***. A fuse removal and installation tool (A) is included in the SACM housing.

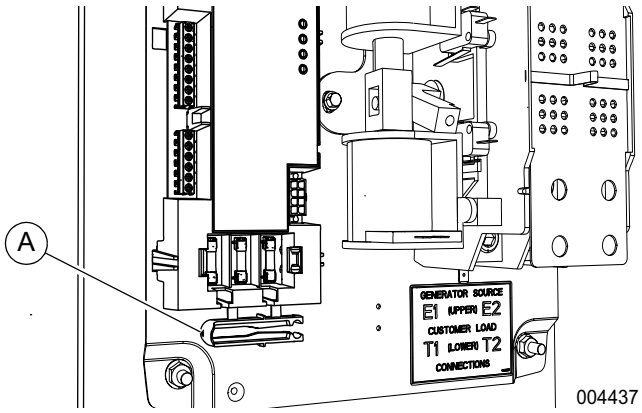

Figure 4-2. Fuse Removal and Installation Tool

If a fuse requires replacement, snap the tool free with an appropriate tool such as diagonal pliers, and use it to replace the fuse. The tool can be stored in the SACM housing retainer directly above the fuses, with the large thumb tab facing out.

Use only Generac replacement fuses—part number 10000005117, rated 240 VAC, 6.3 Amps, 10,000 AIC.

Alternative fuses are Littelfuse® 021606.3MXP or Optifuse® FCD-6.3.

Testing The SMM

Refer to the SMM Owner’s/Installation Manual for testing procedure.

Section 5: Drawings and Diagrams

Installation Drawings

No. 0G6832-A: 100A SE & non-SE/150-200A non-SE

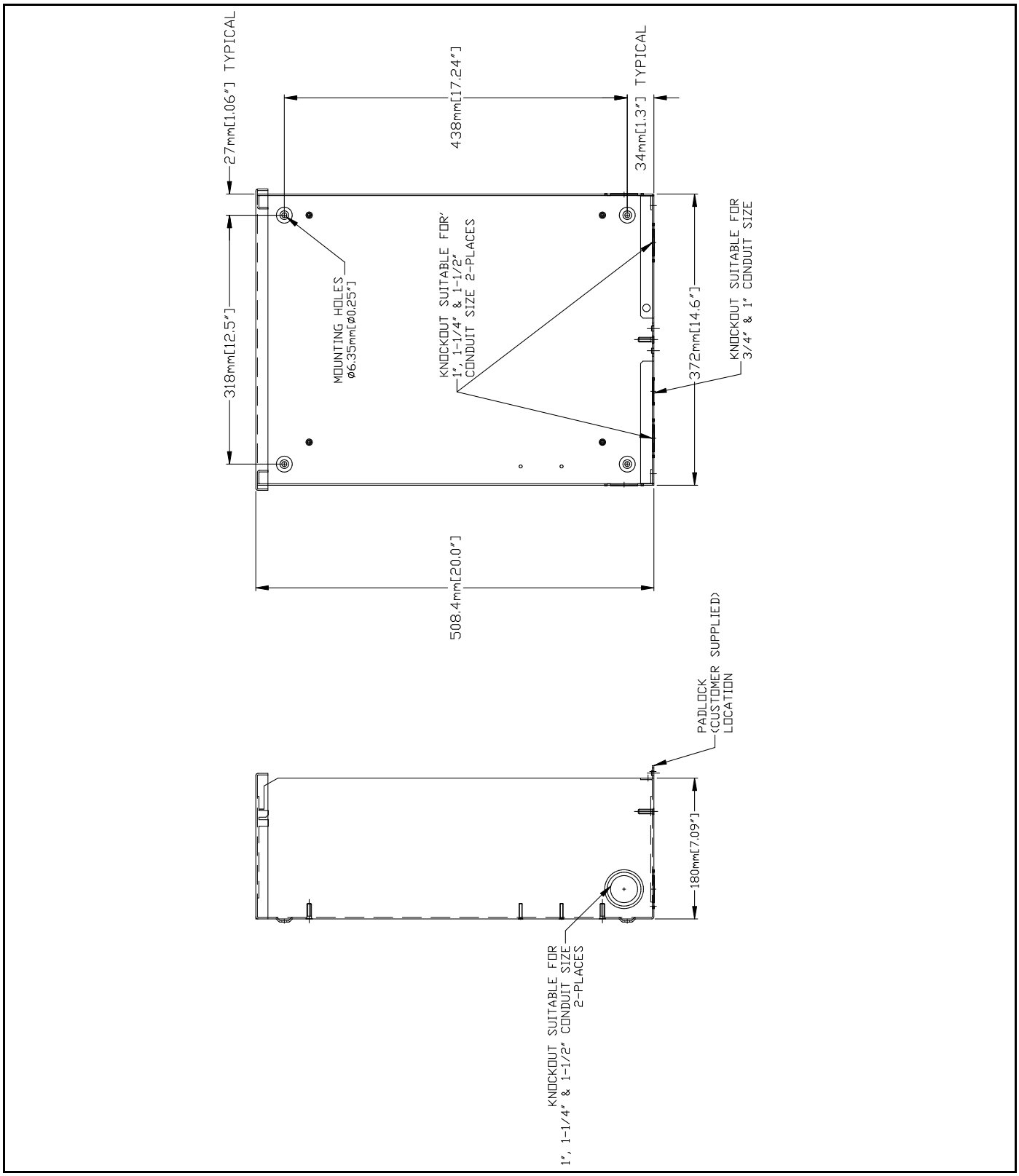

No.10000012171-A: 150/200A SE

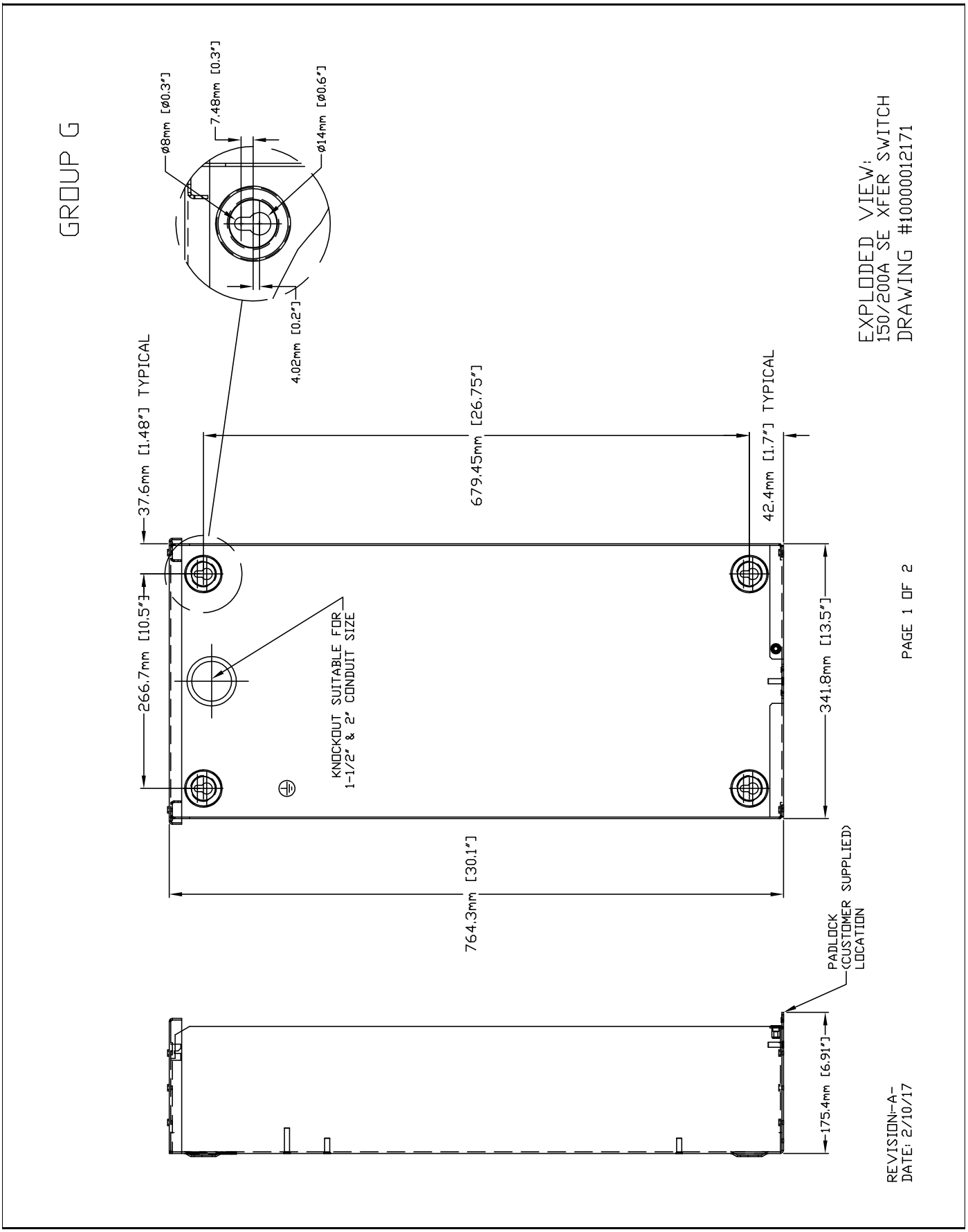

Interconnection Drawings

No. 10000009574 (Part 1 of 2)—Liquid-Cooled Generator

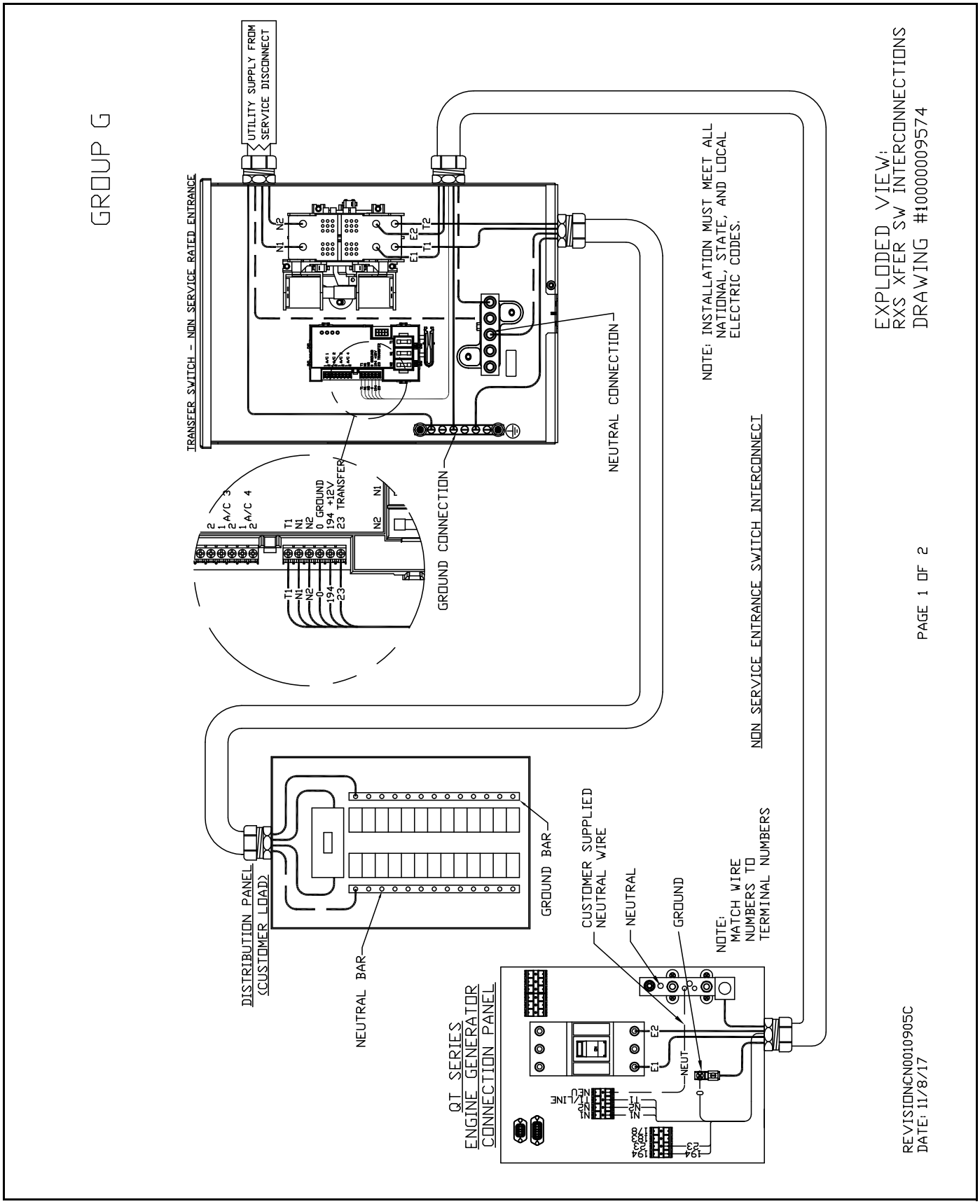

No. 10000009574 (Part 2 of 2)—Liquid-Cooled Generator

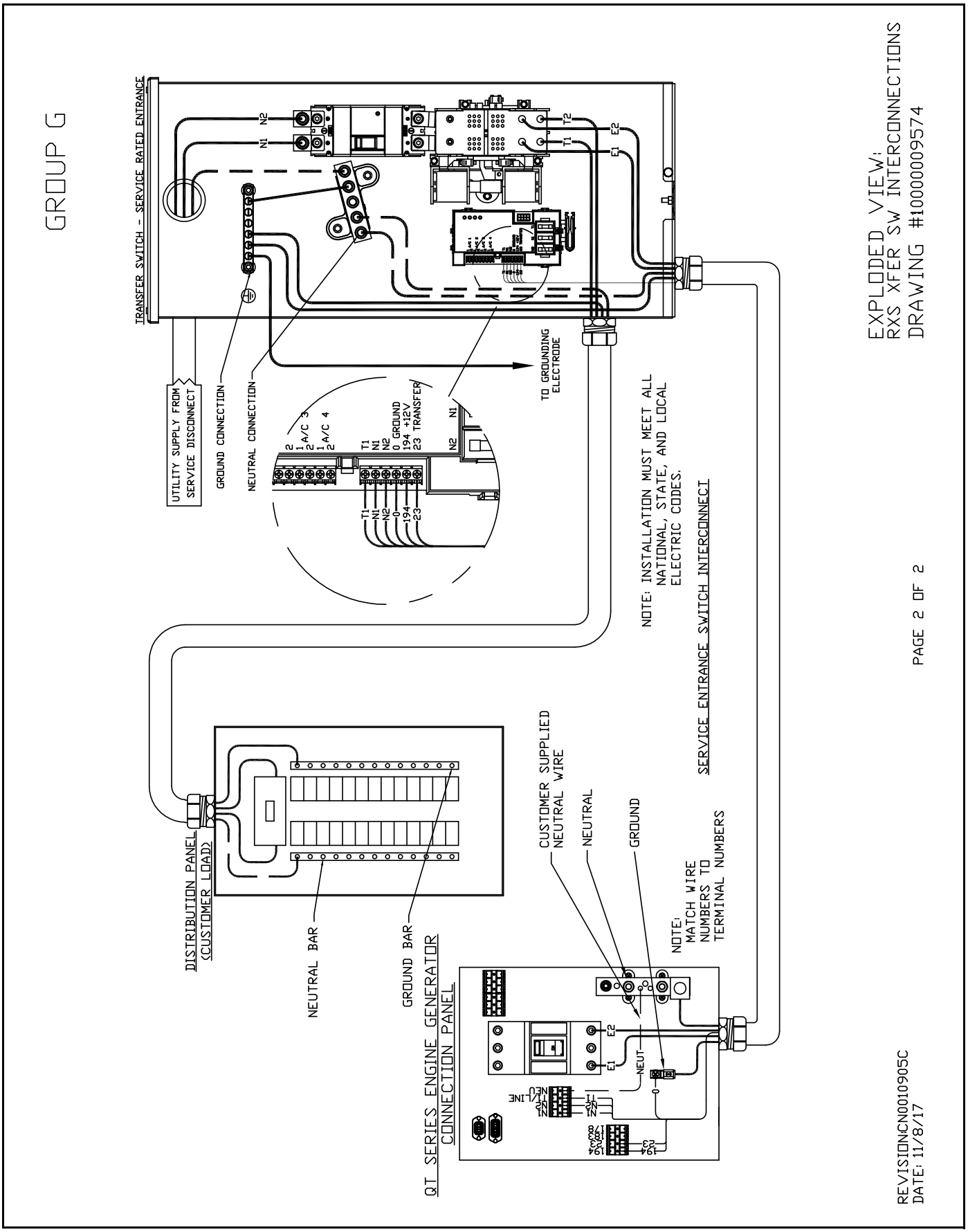

No. 10000009620, SE and non-SE Rated ATS (1 of 2)—Air-Cooled Generator

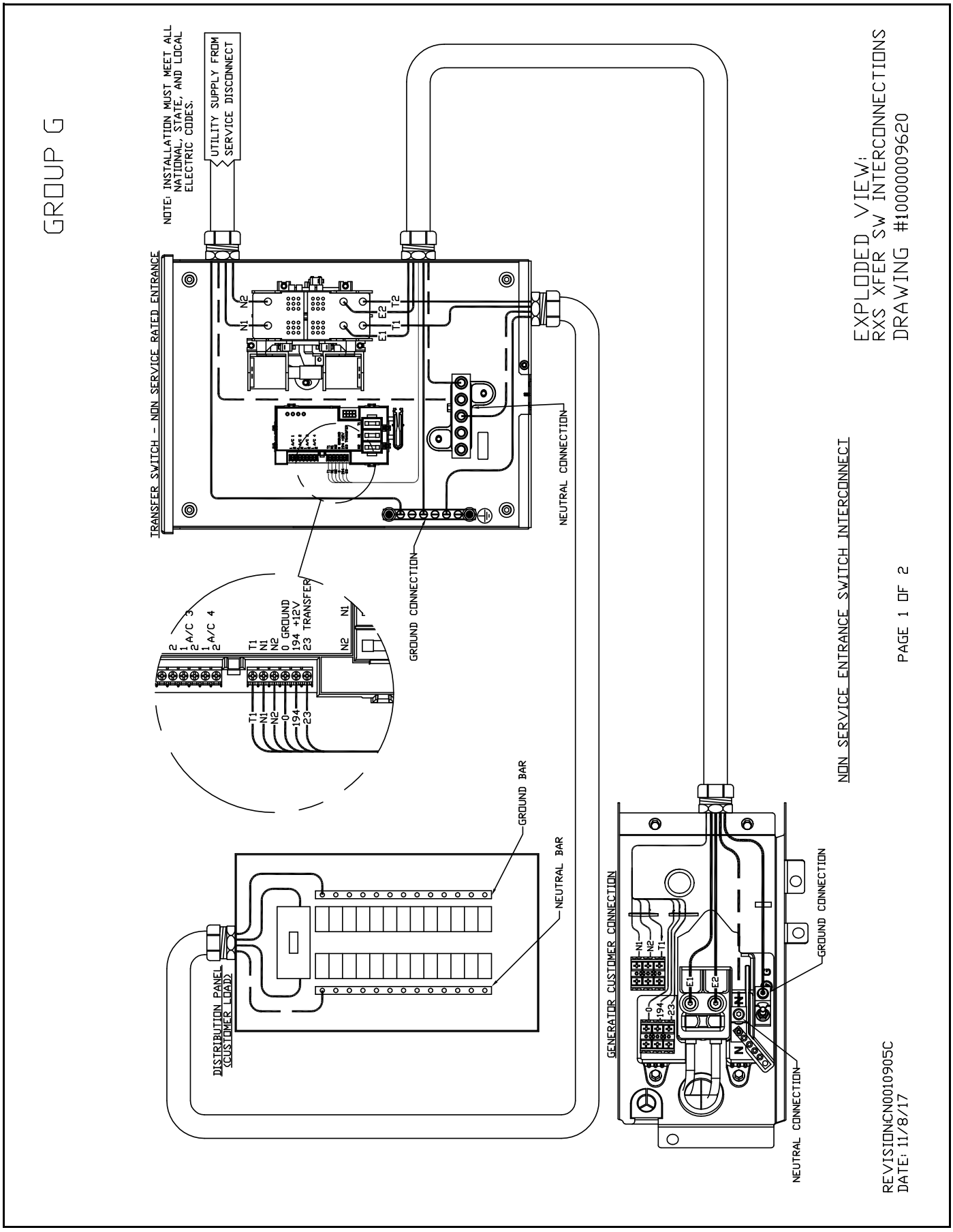

No. 10000009620, SE and non-SE Rated ATS (2 of 2)—Air-Cooled Generator

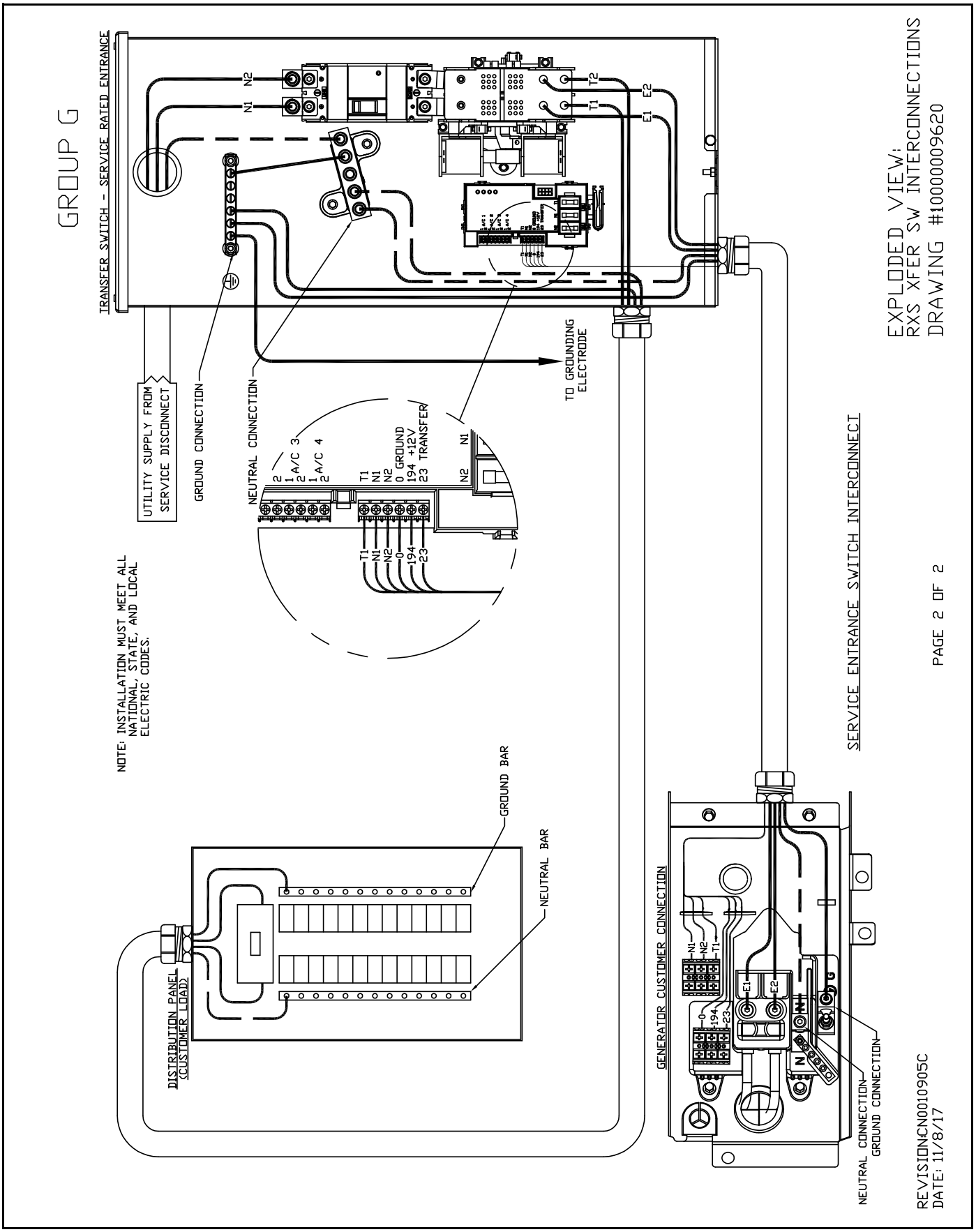

This page intentionally left blank.

This page intentionally left blank.

Generac Power Systems, Inc.
S45 W29290 Hwy 59
Waukesha, WI 53187
1-855-GEN-INFO
honeywellgenerators.com

©Generac Power Systems, Inc. All rights reserved.
Specifications subject to change without notice.

Honeywell

The Honeywell trademark is used under license from Honeywell International Inc.
Honeywell International Inc. makes no representation or warranties with respect to this product.
This product is manufactured by Generac Power Systems, Inc., Waukesha, WI 53189, USA.

Part Number 10000009532 Revision B (03/05/2018)