Owner's Manual

60 Hz Air-Cooled Generators

10 kW to 22 kW

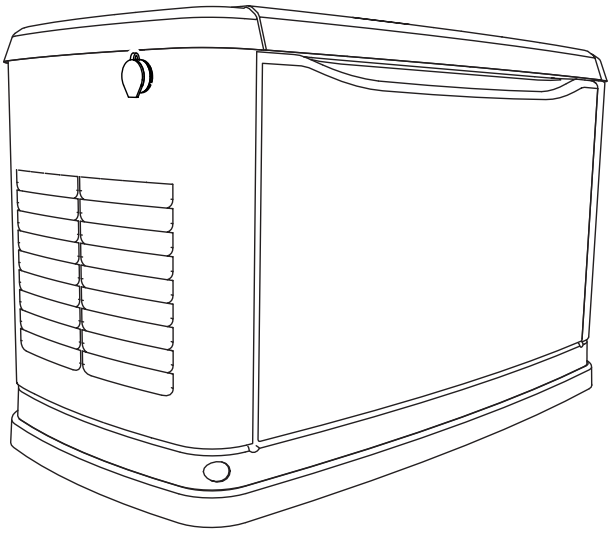

⚠WARNING

Loss of life. This product is not intended to be used in a critical life support application. Failure to adhere to this warning could result in death or serious injury.

(000209b)

Register your Generac product at:
WWW.GENERAC.COM
1-888-GENERAC
(888-436-3722)

Para español, visita: http://www.generac.com/service-support/product-support-lookup

Pour le français, visiter : http://www.generac.com/service-support/product-support-lookup

SAVE THIS MANUAL FOR FUTURE REFERENCE

Use this page to record important information about this generator.

Model:	
Serial:	
Production Date:	
Volts:	
LPV Amps:	
NG Amps:	
Hz:	
Phase:	
Controller P/N:	
STA MAC ID:	
SSID:	

Record the information found on the unit data label on this page. See ***General Information*** for the location of the unit data label. The unit has a label plate affixed to the inside partition, to the left of the control panel console as shown in ***Figure 2-1*** or ***Figure 2-3***. See ***Operation*** for directions on how to open the top lid and remove the front panel.

Always supply the complete model and serial numbers of the unit when contacting an Independent Authorized Service Dealer (IASD) about parts and service.

Operation and Maintenance: Correct maintenance and care of the unit ensures a minimum number of problems, and keeps operating expenses at a minimum. It is the operator's responsibility to perform all safety inspections, to verify all maintenance for safe operation is performed promptly, and to have the equipment inspected periodically by an IASD. Normal maintenance, service, and replacement of parts are the responsibility of the owner/operator and are not considered defects in materials or workmanship within the terms of the warranty. Individual operating habits and usage may contribute to the need for additional maintenance or service.

When the generator requires servicing or repairs, Generac recommends contacting an IASD for assistance. Authorized service technicians are factory-trained and are capable of handling all service needs. To locate the nearest IASD, please visit the dealer locator at:
www.generac.com/Dealer-Locator.

⚠WARNING

CANCER AND REPRODUCTIVE HARM
www.P65Warnings.ca.gov.

(000393a)

Table of Contents

Section 1: Safety Information

Introduction **1**
Read This Manual Thoroughly 1
Safety Rules **1**
How to Obtain Service 1
General Hazards **2**
Exhaust Hazards **3**
Electrical Hazards **3**
Fire Hazards **3**
Explosion Hazards **4**
Battery Hazards **4**

Section 2: General Information

Generator **7**
Data Decals **10**
Specifications **11**
Generator 11
Engine 11
Protection Systems **12**
Emissions **12**
Fuel Requirements **12**
Battery Requirements **12**
Battery Charger **12**
Engine Oil Requirements **12**
Activating the Generator **13**
Wi-Fi Module **13**
Replacement Parts **13**
Accessories **13**

Section 3: Operation

Site Prep Verification **15**
Generator Enclosure **15**
Opening the Lid 15
Front Access Panel Removal 15
Intake Side Panel Removal 16
Main Line Circuit Breaker (Generator Disconnect) 16
LED Indicator Lights 16
Auxiliary Shutdown Switch **17**
Control Panel Interface **17**
Using the AUTO/OFF/MANUAL Interface **17**
Operating Modes **18**
Interface Menu Displays **18**
LCD Panel 18
Menu System Navigation **19**
Setting the Exercise Timer **21**
Battery Charger **21**
Manual Transfer Operation **21**
Transfer to Generator Power Source 21
Transfer to Utility Power Source 22
Automatic Transfer Operation **22**
Automatic Sequence of Operation **22**
Utility Failure 22
Cranking 22
Cold Smart Start 22
Cleaning Cycle 22
Load Transfer 23
Shutting Generator Down While Under Load or During a Utility Outage **23**

Section 4: Maintenance

Maintenance **25**
Preparing for Maintenance **25**
Performing Scheduled Maintenance **25**
Service Schedule **26**
Maintenance Log 26
Checking Engine Oil Level **27**
Engine Oil Requirements 27
Changing the Oil and Oil Filter **27**
Servicing the Air Cleaner **28**
Spark Plug(s) **28**
Valve Clearance Adjustment **29**
Checking Valve Clearance 29
Adjusting Valve Clearance 30
Battery Maintenance **30**
Inspecting the Battery 31
Cleaning the Sediment Trap **32**
Post Maintenance Checks **32**
Performing Fuel System Leak Test 32
Attention After Submersion **33**
Corrosion Protection **33**
Remove From and Return To Service Procedure **33**
Remove From Service 33
Return to Service 33

Section 5: Troubleshooting / Quick Reference Guide

Generator Troubleshooting **35**
Quick Reference Guide **37**

This page intentionally left blank.

Section 1: Safety Information

Introduction

Thank you for purchasing this compact, high performance, air-cooled, engine-driven generator. It is designed to automatically supply electrical power to operate critical loads during a utility power failure.

This unit is factory installed in an all-weather, metal enclosure intended exclusively for outdoor installation. This generator will operate using either vapor withdrawn liquid propane (LP) or natural gas (NG).

NOTE: This generator is suitable for supplying typical residential loads such as induction motors (sump pumps, refrigerators, air conditioners, furnaces, etc.), electronic components (computer, monitor, TV, etc.), lighting loads, and microwaves, when sized correctly. This unit is equipped with a Wi-Fi® module, which allows the generator owner to monitor generator status from anywhere they have Internet access.

NOTE: Wi-Fi® is a registered trademark of Wi-Fi Alliance®.

The information in this manual is accurate based on products produced at the time of publication. The manufacturer reserves the right to make technical updates, corrections, and product revisions at any time without notice.

Read This Manual Thoroughly

WARNING

Consult Manual. Read and understand manual completely before using product. Failure to completely understand manual and product could result in death or serious injury. (000100a)

If any section of this manual is not understood, contact the nearest Independent Authorized Service Dealer (IASD) or Generac Customer Service at 1-888-436-3722 (1-888-GENERAC), or visit ***www.generac.com*** for starting, operating, and servicing procedures. The owner is responsible for correct maintenance and safe use of the unit.

This manual must be used in conjunction with all other supporting product documentation supplied with the product.

SAVE THESE INSTRUCTIONS for future reference. This manual contains important instructions that must be followed during placement, operation, and maintenance of the unit and its components. Always supply this manual to any individual that will use this unit, and instruct them on how to correctly start, operate, and stop the unit in case of emergency.

Safety Rules

The manufacturer cannot anticipate every possible circumstance that might involve a hazard. The alerts in this manual, and on tags and decals affixed to the unit, are not all inclusive. If using a procedure, work method, or operating technique that the manufacturer does not specifically recommend, verify that it is safe for others and does not render the equipment unsafe.

Throughout this publication, and on tags and decals affixed to the unit, DANGER, WARNING, CAUTION, and NOTE blocks are used to alert personnel to special instructions about a particular operation that may be hazardous if performed incorrectly or carelessly. Observe them carefully. Alert definitions are as follows:

DANGER

Indicates a hazardous situation which, if not avoided, will result in death or serious injury.

(000001)

WARNING

Indicates a hazardous situation which, if not avoided, could result in death or serious injury.

(000002)

CAUTION

Indicates a hazardous situation which, if not avoided, could result in minor or moderate injury.

(000003)

NOTE: Notes contain additional information important to a procedure and will be found within the regular text of this manual.

These safety alerts cannot eliminate the hazards that they indicate. Common sense and strict compliance with the special instructions while performing the action or service are essential to preventing accidents.

How to Obtain Service

When the unit requires servicing or repairs, contact Generac Customer Service at 1-888-GENERAC (1-888-436-3722) or visit ***www.generac.com*** for assistance.

When contacting Generac Customer Service about parts and service, always supply the complete model and serial number of the unit as given on its data decal located on the unit. Record the model and serial numbers in the spaces provided on the front cover of this manual.

General Hazards

DANGER

Loss of life. Property damage. Installation must always comply with applicable codes, standards, laws and regulations. Failure to do so will result in death or serious injury.

(000190)

DANGER

Automatic start-up. Disconnect utility power and render unit inoperable before working on unit. Failure to do so will result in death or serious injury.

(000191)

WARNING

Loss of life. This product is not intended to be used in a critical life support application. Failure to adhere to this warning could result in death or serious injury.

(000209b)

WARNING

Equipment damage. This unit is not intended for use as a prime power source. It is intended for use as an intermediate power supply in the event of temporary power outage only. Doing so could result in death, serious injury, and equipment damage.

(000247a)

WARNING

Accidental Start-up. Disconnect the negative battery cable, then the positive battery cable when working on unit. Failure to do so could result in death or serious injury.

(000130)

WARNING

Equipment damage. Only qualified service personnel may install, operate, and maintain this equipment. Failure to follow proper installation requirements could result in death, serious injury, and equipment or property damage.

(000182a)

WARNING

Electrocution. Potentially lethal voltages are generated by this equipment. Render the equipment safe before attempting repairs or maintenance. Failure to do so could result in death or serious injury.

(000187)

WARNING

Electric shock. Only a trained and licensed electrician should perform wiring and connections to unit. Failure to follow proper installation requirements could result in death, serious injury, and equipment or property damage.

(000155a)

WARNING

Moving Parts. Do not wear jewelry when starting or operating this product. Wearing jewelry while starting or operating this product could result in death or serious injury.

(000115)

WARNING

Moving Parts. Keep clothing, hair, and appendages away from moving parts. Failure to do so could result in death or serious injury.

(000111)

WARNING

Hot Surfaces. When operating machine, do not touch hot surfaces. Keep machine away from combustibles during use. Hot surfaces could result in severe burns or fire.

(000108)

WARNING

Equipment and property damage. Do not alter construction of, installation, or block ventilation for generator. Failure to do so could result in unsafe operation or damage to the generator.

(000146)

WARNING

Risk of injury. Do not operate or service this machine if not fully alert. Fatigue can impair the ability to service this equipment and could result in death or serious injury.

(000215)

WARNING

Environmental Hazard. Always recycle batteries at an official recycling center in accordance with all local laws and regulations. Failure to do so could result in environmental damage, death, or serious injury.

(000228)

WARNING

Injury and equipment damage. Do not use generator as a step. Doing so could result in falling, damaged parts, unsafe equipment operation, and could result in death or serious injury.

(000216)

Exhaust Hazards

DANGER

Asphyxiation. Running engines produce carbon monoxide, a colorless, odorless, poisonous gas. Carbon monoxide, if not avoided, will result in death or serious injury. (000103)

WARNING

Asphyxiation. Always use a battery operated carbon monoxide alarm indoors and installed according to the manufacturer's instructions. Failure to do so could result in death or serious injury. (000178a)

WARNING

Equipment and property damage. Do not alter construction of, installation, or block ventilation for generator. Failure to do so could result in unsafe operation or damage to the generator. (000146)

WARNING

Fire risk. Fuel and vapors are extremely flammable. Do not operate indoors. Doing so could result in death, serious injury, or property or equipment damage. (000281)

Electrical Hazards

DANGER

Electrocution. Contact with bare wires, terminals, and connections while generator is running will result in death or serious injury. (000144)

DANGER

Electrocution. Never connect this unit to the electrical system of any building unless a licensed electrician has installed an approved transfer switch. Failure to do so will result in death or serious injury. (000150)

DANGER

Electrical backfeed. Use only approved switchgear to isolate generator from the normal power source. Failure to do so will result in death, serious injury, and equipment damage. (000237)

DANGER

Electrocution. Verify electrical system is properly grounded before applying power. Failure to do so will result in death or serious injury. (000152)

DANGER

Electrocution. Do not wear jewelry while working on this equipment. Doing so will result in death or serious injury. (000188)

DANGER

Electrocution. Water contact with a power source, if not avoided, will result in death or serious injury. (000104)

DANGER

Electrocution. In the event of electrical accident, immediately shut power OFF. Use non-conductive implements to free victim from live conductor. Apply first aid and get medical help. Failure to do so will result in death or serious injury. (000145)

Fire Hazards

WARNING

Fire hazard. Do not obstruct cooling and ventilating airflow around the generator. Inadequate ventilation could result in fire hazard, possible equipment damage, death or serious injury. (000217)

WARNING

Fire and explosion. Installation must comply with all local, state, and national electrical building codes. Noncompliance could result in unsafe operation, equipment damage, death, or serious injury. (000218)

WARNING

Fire hazard. Use only fully-charged fire extinguishers rated "ABC" by the NFPA. Discharged or improperly rated fire extinguishers will not extinguish electrical fires in automatic standby generators. (000219)

WARNING

Consult Manual. Read and understand manual completely before using product. Failure to completely understand manual and product could result in death or serious injury.

(000100a)

WARNING

Electrocution. Refer to local codes and standards for safety equipment required when working with a live electrical system. Failure to use required safety equipment could result in death or serious injury.

(000257)

WARNING

Risk of Fire. Unit must be positioned in a manner that prevents combustible material accumulation underneath. Failure to do so could result in death or serious injury.

(000147)

Comply with regulations the local agency for workplace health and safety has established. Also, verify that the generator is installed in accordance with the manufacturer's instructions and recommendations. Following proper installation, do nothing that might alter a safe installation and render the unit in noncompliance with the aforementioned codes, standards, laws and regulations.

Explosion Hazards

DANGER

Explosion and fire. Fuel and vapors are extremely flammable and explosive. No leakage of fuel is permitted. Keep fire and spark away. Failure to do so will result in death or serious injury.

(000192)

DANGER

Explosion and fire. Connection of fuel source must be completed by a qualified professional technician or contractor. Incorrect installation of this unit will result in death, serious injury, and property and equipment damage.

(000151a)

DANGER

Risk of fire. Allow fuel spills to completely dry before starting engine. Failure to do so will result in death or serious injury.

(000174)

WARNING

Risk of Fire. Hot surfaces could ignite combustibles, resulting in fire. Fire could result in death or serious injury.

(000110)

Battery Hazards

DANGER

Electrocution. Do not wear jewelry while working on this equipment. Doing so will result in death or serious injury.

(000188)

WARNING

Explosion. Do not dispose of batteries in a fire. Batteries are explosive. Electrolyte solution can cause burns and blindness. If electrolyte contacts skin or eyes, flush with water and seek immediate medical attention.

(000162)

WARNING

Explosion. Batteries emit explosive gases while charging. Keep fire and spark away. Wear protective gear when working with batteries. Failure to do so could result in death or serious injury.

(000137a)

WARNING

Electrical shock. Disconnect battery ground terminal before working on battery or battery wires. Failure to do so could result in death or serious injury.

(000164)

WARNING

Risk of burns. Batteries contain sulfuric acid and can cause severe chemical burns. Wear protective gear when working with batteries. Failure to do so could result in death or serious injury.

(000138a)

WARNING

Risk of burn. Do not open or mutilate batteries. Batteries contain electrolyte solution which can cause burns and blindness. If electrolyte contacts skin or eyes, flush with water and seek immediate medical attention.

(000163a)

WARNING

Environmental Hazard. Always recycle batteries at an official recycling center in accordance with all local laws and regulations. Failure to do so could result in environmental damage, death, or serious injury. (000228)

Always recycle batteries in accordance with local laws and regulations. Contact your local solid waste collection site or recycling facility to obtain information on local recycling processes. For more information on battery recycling, visit the Battery Council International website at: ***http://batterycouncil.org***

This page intentionally left blank.

Section 2: General Information

Generator

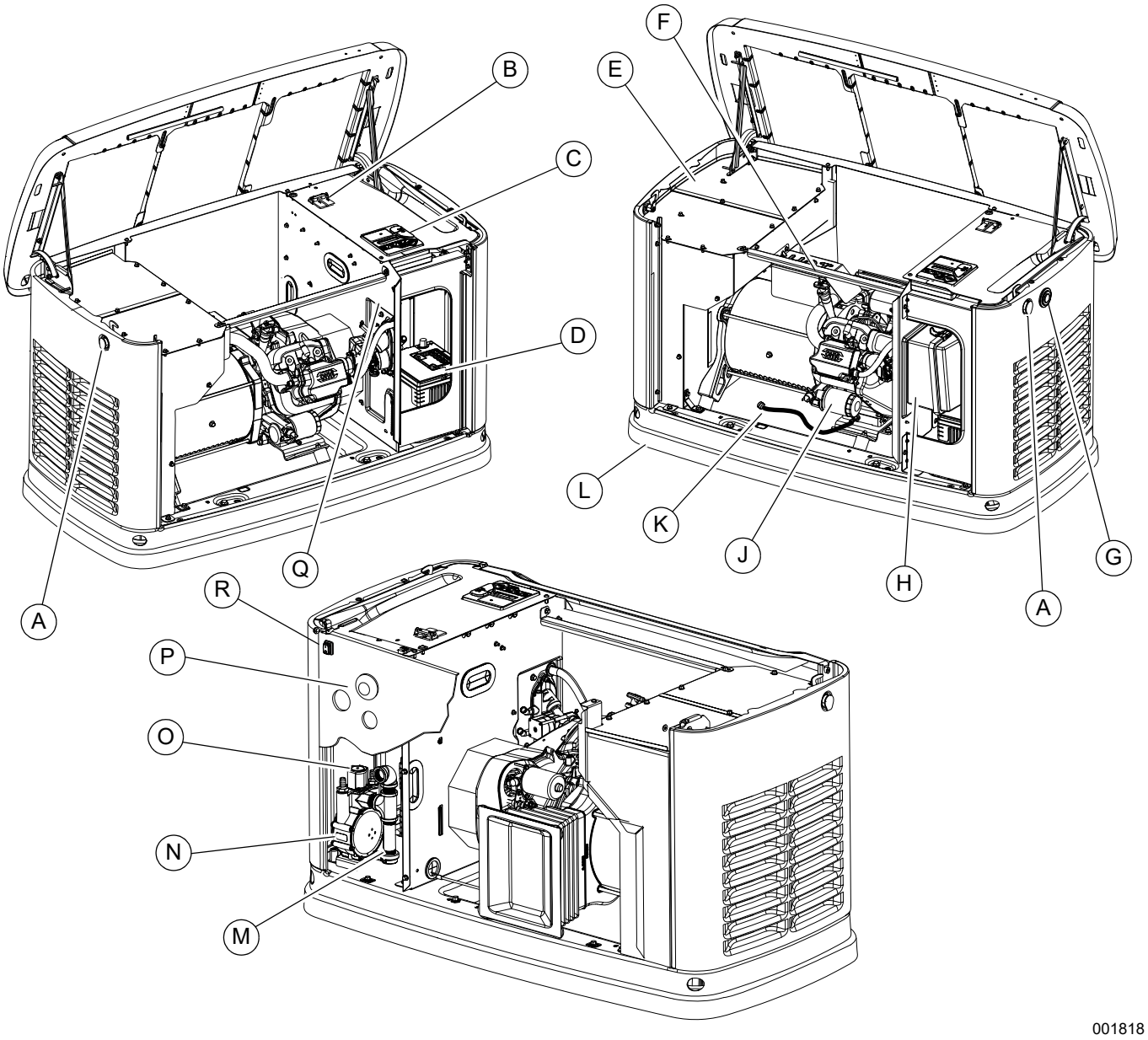

Figure 2-1. 10 kW—Components and Control Locations

A.	Lock with cover	**F.**	Oil fill cap/dipstick	**K.**	Oil drain hose	**O.**	Fuel inlet
B.	Main line circuit breaker (generator disconnect)	**G.**	Status LED indicators	**L.**	Composite base	**P.**	Wi-Fi module
C.	Control panel	**H.**	Airbox with air cleaner	**M.**	Sediment trap	**Q.**	Data decal location
D.	Battery compartment (battery not supplied)	**J.**	Oil filter	**N.**	Fuel regulator	**R.**	Auxiliary shutdown switch
E.	Exhaust enclosure						

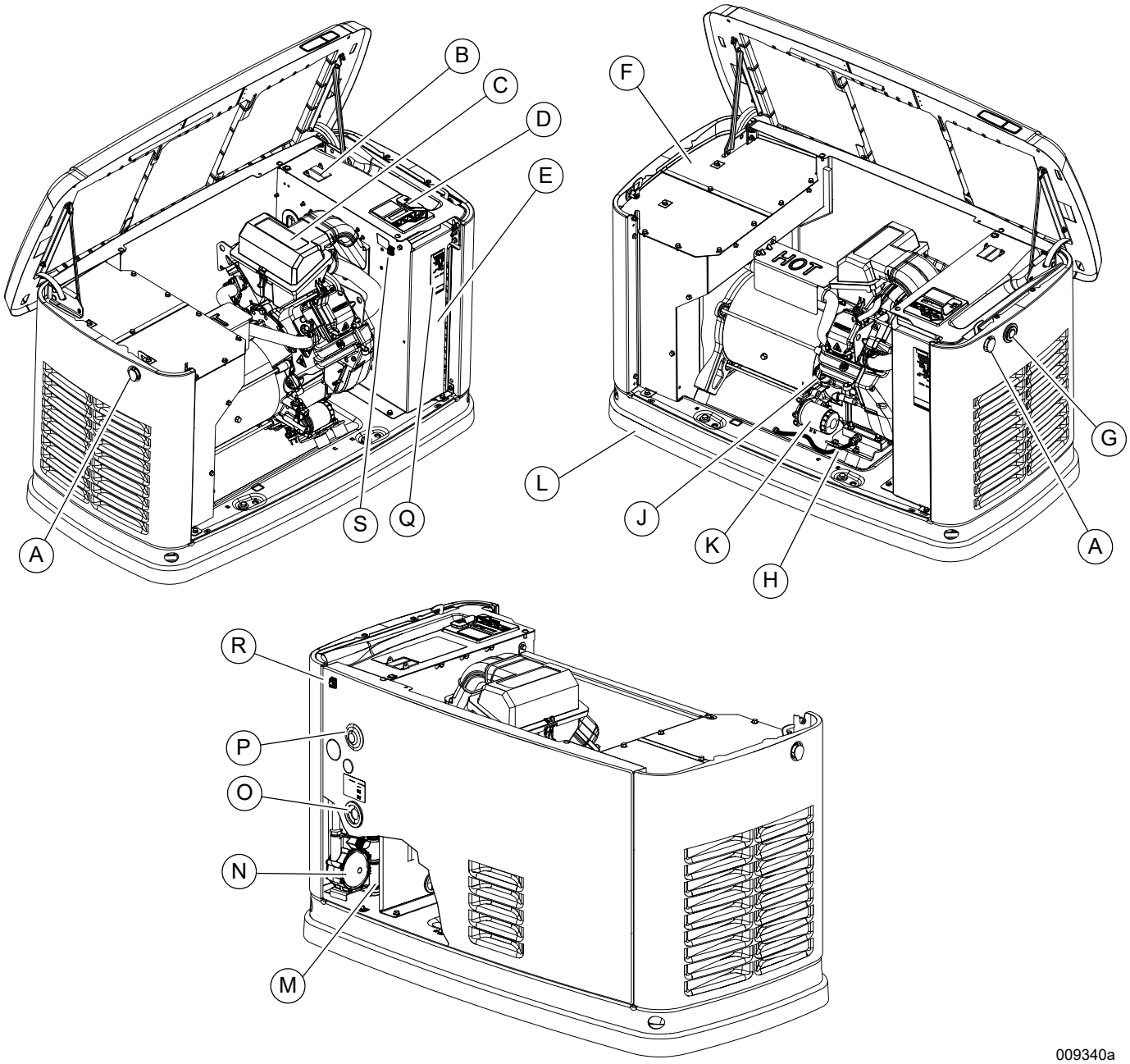

Figure 2-2. 13 kW–16 kW—Components and Control Locations

A.	Lock with cover	**F.**	Exhaust enclosure	**L.**	Composite base	**Q.**	Data decal location
B.	Main line circuit breaker (generator disconnect)	**G.**	Status LED indicators	**M.**	Sediment trap	**R.**	Auxiliary shutdown switch
C.	Airbox with air cleaner	**H.**	Oil drain hose	**N.**	Fuel regulator	**S.**	Auxiliary shutdown switch
D.	Control panel	**J.**	Oil fill cap/dipstick	**O.**	Fuel inlet		
E.	Battery compartment (battery not supplied)	**K.**	Oil filter	**P.**	Wi-Fi module		

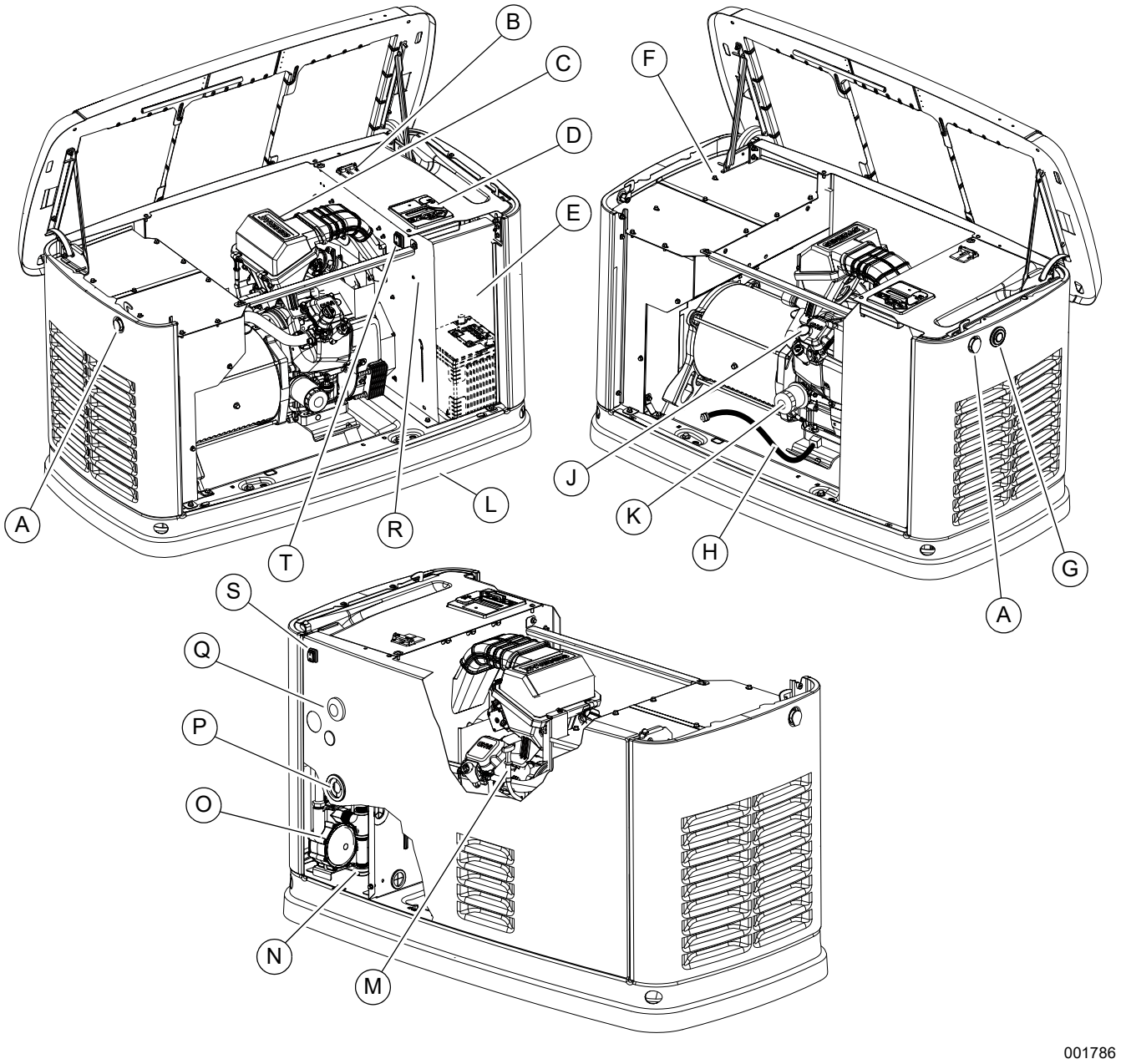

Figure 2-3. 20 kW–22 kW—Components and Control Locations

A.	Lock with cover	**F.**	Exhaust enclosure	**L.**	Composite base	**Q.**	Wi-Fi module
B.	Main line circuit breaker (generator disconnect)	**G.**	Status LED indicators	**M.**	Oil dipstick	**R.**	Data decal location
C.	Airbox with air cleaner	**H.**	Oil drain hose	**N.**	Sediment trap	**S.**	Auxiliary shutdown switch
D.	Control panel	**J.**	Oil fill cap	**O.**	Fuel regulator	**T.**	Auxiliary shutdown switch
E.	Battery compartment (battery not supplied)	**K.**	Oil filter	**P.**	Fuel inlet		

Data Decals

Two decals on the generator provide information about the unit itself and required fuel inlet pressure for correct operation.

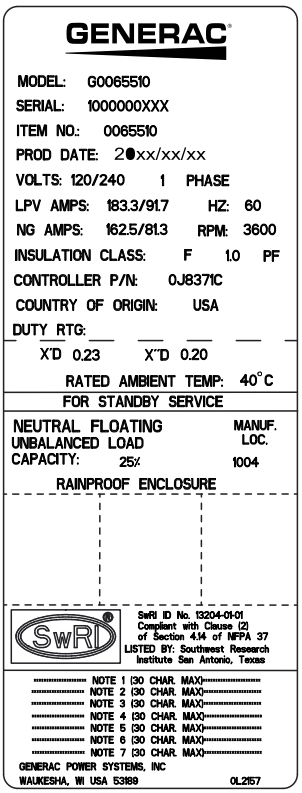

Model Data Decal

Includes important information about the unit including:

- model number
- serial number
- production date
- voltage
- frequency
- amps
- country of origin
- rated ambient temperature

The model data decal also displays certification symbols by Underwriter's Laboratory (UL) and the Southwest Research Institute (SwRI).

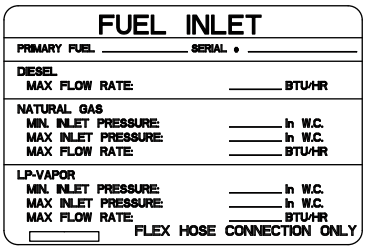

Fuel Inlet Pressure

Displays unit serial number, along with minimum and maximum inlet pressures for natural gas (NG) and liquid propane (LP) supply. Space is provided for installer to enter maximum flow rates based on installed pipe sizes and lengths.

Specifications

Generator

Model	10 kW	13 kW	16 kW	20 kW	22 kW
Rated voltage	240				
Rated maximum load current (amps) at rated voltage with LP*	41.7	54.2	66.7	83.3	91.7
Main line circuit breaker (generator disconnect)	45 amp	60 amp	70 amp	90 amp	100 amp
Phase	1				
Rated AC frequency	60 Hz				
Battery requirement (field supplied)	12 volts, Group 26R-540CCA Minimum or Group 35AGM-650CCA Minimum (see ***Replacement Parts***)				
Enclosure	Aluminum				
Weight (lb / kg) (without battery)	338 / 153	385 / 175	420 / 191	448 / 203	466 / 211
Normal operating range	This unit is tested in accordance to UL 2200 standards with an operating temperature of -20 °F (-29 °C) to 122 °F (50 °C). For areas where temperatures fall below 32 °F (0 °C), a cold weather kit is recommended. When operated above 77 °F (25 °C), there may be a decrease in engine power. See ***Engine***.				
These generators are rated in accordance with UL 2200, Safety Standard for Stationary Engine Generator Assemblies, and CSA-C22.2 No. 100-04 Standard for Motors and Generators. * NG ratings will depend on specific fuel joules/BTU content. Typical derates are between 10-20% off the LP gas rating.					

Engine

Model	10 kW	13/16 kW	20/22 kW
Engine type	G-Force 400 Series	G-Force 800 Series	G-Force 1000 Series
Number of cylinders	1	2	2
Displacement	460 cc	816 cc	999 cc
Cylinder block	Aluminum with cast iron sleeve		
Recommended spark plug	See ***Replacement Parts***		
Spark plug gap	0.020 in (0.508 mm)		0.040 in (1.02 mm)
Hydraulic Lifters	No	Yes	No
Valve clearance	0.002–0.004 in (0.05–0.1 mm)	N/A	0.002–0.004 in (0.05–0.1 mm)
Starter	12 VDC		
Oil capacity including filter	Approx. 1.1 qt (1.03 L)	Approx. 2.2 qt (2.1 L)	Approx. 1.9 qt (1.8 L)
Recommended oil filter	See ***Replacement Parts***		
Recommended air filter	See ***Replacement Parts***		
Engine power is subject to and limited by such factors as fuel BTU/joules, ambient temperature, and altitude. Engine power decreases approximately 3.5% for each 1,000 ft (304.8 m) above sea level, and also will decrease approximately 1% for each 10 °F (6 °C) above 60 °F (15 °C) ambient temperature.			

A detailed specification sheet for a particular generator is available from a local IASD.

Protection Systems

The generator may need to run for long periods of time with no operator present to monitor engine or generator conditions. The generator is equipped with protection systems to automatically shut down the unit to protect against potentially damaging conditions. Some of these systems include:

Alarms:

- High Temperature
- Low Oil Pressure
- Overcrank
- Overspeed
- Overvoltage
- Undervoltage
- Overload
- Underspeed
- RPM Sensor Loss
- Controller Fault
- Wiring Error
- Stepper Overcurrent

Warnings:

- Charger Warning
- Charger Missing AC
- Low Battery
- Battery Problem
- Exercise Set Error
- USB Warning
- Download Failure

The control panel contains a display alerting the operator when a fault condition occurs. The above list is not all-inclusive. See ***Operation*** for more information about alarms and control panel operation.

NOTE: A warning indicates a condition on the generator which should be addressed, but will not shut down generator. An alarm shuts down the generator to protect system from any damage. In event of an alarm, an owner can clear the alarm and restart generator prior to contacting an IASD. Contact an IASD if the intermittent issue occurs again.

Emissions

The United States Environmental Protection Agency (US EPA) (and California Air Resources Board (CARB), for engines/equipment certified to California standards) requires this engine/equipment to comply with exhaust and evaporative emissions standards. Locate the emissions compliance decal on the engine to determine applicable standards. See the included emissions warranty for emissions warranty information. Follow the maintenance specifications in this manual to ensure the engine complies with applicable emissions standards for the duration of the product's life.

This generator is certified to operate on liquid propane vapor fuel or pipeline natural gas.

The Emission Control System code is EM (Engine Modification). The Emission Control System on this generator consists of the following:

System	Components
Air Induction	- Intake manifold - Air cleaner
Fuel Metering	- Carburetor and mixer assembly - Fuel regulator
Ignition	- Spark plug - Ignition module
Exhaust	- Exhaust manifold - Muffler

Fuel Requirements

DANGER

Explosion and Fire. Fuel and vapors are extremely flammable and explosive. Add fuel in a well ventilated area. Keep fire and spark away. Failure to do so will result in death or serious injury. (000105)

The engine has been fitted with a dual fuel carburetion system. The unit will run on NG or LP gas, but has been factory-configured to run on NG. The fuel system will be configured for the available fuel source during installation.

Recommended fuels should have a BTU content of at least 1,000 BTUs per ft^3 (37.26 megajoules per m^3) for natural gas, or at least 2,500 BTUs per ft^3 (93.15 megajoules per m^3) for LP gas.

NOTE: If converting to LP gas from NG, a minimum LP tank size of 250 gal (946 L) is recommended. See installation manual for complete procedures and details.

Battery Requirements

12 volts, Group 26R Wet Cell 540CCA minimum or Group 35 AGM 650CCA minimum (not included with unit.) See ***Battery Maintenance*** for correct battery maintenance procedures.

Battery Charger

The battery charger is integrated into the control panel module in all models. It operates as a smart charger, verifying output charging levels are safe and continuously optimized to promote maximum battery life. A kit is provided to install a fuse in transfer switch for T1 battery charger connection. Follow installation instructions provided with kit.

NOTE: Do not use external battery chargers.

Engine Oil Requirements

See ***Engine Oil Requirements*** for correct oil viscosity.

Activating the Generator

The generator should be activated upon initial startup. See installation manual for complete instructions.

Wi-Fi Module

The generator is equipped with a Wi-Fi module. See Wi-Fi module owner's manual for further instruction.

Replacement Parts

Description	10 kW	13 kW	16 kW	20 kW	22 kW
26R Exide battery	0H3421S				
Spark plug	0G0767B (RC12YC or equivalent)			0G0767A (RC12YC or equivalent)	
Oil filter	070185E				
Air filter	0E9371A	0J8478			
Control panel fuse	0D7178T				
Transfer switch fuses	See transfer switch manual for part number				

Accessories

NOTE: Performance enhancing accessories are available for air-cooled generators. Contact an IASD or visit ***www.generac.com*** for additional information on replacement parts, accessories, and extended warranties. See also ***http://www.ordertree.com/generac/air-cooled-homestandby-generators/***.

Accessory	Description
Cold Weather Accessories*— • Battery Pad Warmer • Oil Warmer • Breather Warmer ** each sold separately*	• Recommended in areas where temperatures fall below 0 °F (-18 °C). *(Not necessary for use with AGM-style batteries)* • Recommended in areas where temperatures fall below 0 °F (-18 °C). • Recommended in areas where heavy icing occurs.
Scheduled Maintenance Kit	Includes all items necessary to perform complete routine maintenance on the generator along with oil recommendations (oil not included).
Fascia Base Wrap	The fascia base wrap snaps together around the bottom of the new air-cooled generators. This offers a sleek, contoured appearance as well as protection from rodents and insects by covering the lifting holes located in the base. Requires use of the mounting pad shipped with the generator.
Mobile Link™ 4G LTE Cellular Accessory	The Mobile Link 4G LTE Cellular Accessory allows the user to monitor the status of the generator from anywhere in the world, using a smartphone, tablet, or PC. Easily access information such as the current operating status and maintenance alerts. Users can connect an account with an authorized service dealer for fast, friendly, and proactive service. With Mobile Link, users are taken care of before the next power outage.
Touch-Up Paint Kit	If the generator enclosure is scratched or damaged, it is important to touch-up the paint to protect from future corrosion. The paint kit includes the necessary paint to correctly maintain or touch-up a generator enclosure.
Extended Warranty Coverage	Extend generator warranty coverage by purchasing extended warranty coverage. Covers both parts and labor. Extended coverage can be purchased within 12 months of the end-user's purchase date. This extended coverage is applicable to registered units and end-user proof of purchase must be available upon request. Available for Generac® and Guardian® products. Not available for Corepower™, PowerPact™, and EcoGen™ products or all international purchases.
Wi-Fi LP Fuel Level Monitor	The Wi-Fi enabled LP fuel level monitor provides constant monitoring of a connected LP fuel tank. Monitoring LP tank level is an important step in verifying the generator is ready to run during an unexpected power failure. Status alerts are available through a free application informing the user when the LP tank needs a refill.

This page intentionally left blank.

Section 3: Operation

Site Prep Verification

DANGER

Automatic start-up. Disconnect utility power and render unit inoperable before working on unit. Failure to do so will result in death or serious injury.

(000191)

Generator must be installed to allow unimpeded airflow into and out of generator.

Mechanical and gravity outdoor air intake openings for air distribution and supply systems must be located not less than 10 ft (3.05 m) horizontally from generator enclosure. See Section 401.4 in the ICC Mechanical Code for additional information.

Verify all shrubs or tall grasses within 3 ft (0.91 m) of intake and discharge louvers on the sides of the enclosure have been removed. Install generator on high ground where water levels will not rise and endanger it. This unit must not operate in or be subjected to standing water. Verify all potential water sources such as water sprinklers, roof run-off, rain gutter downspouts, and sump pump discharges are directed away from unit.

Generator Enclosure

Enclosure lid is locked prior to shipment. A set of keys is attached to cardboard on top of generator. An additional set of keys is attached to pallet bracket on the front intake end of generator.

NOTE: Keys provided with this unit are intended for service personnel use only.

Opening the Lid

1. Use keys to open generator lid.
2. See ***Figure 3-1***. Two locks (A) secure lid; one on each side. Open protective rubber cap to access keyhole.

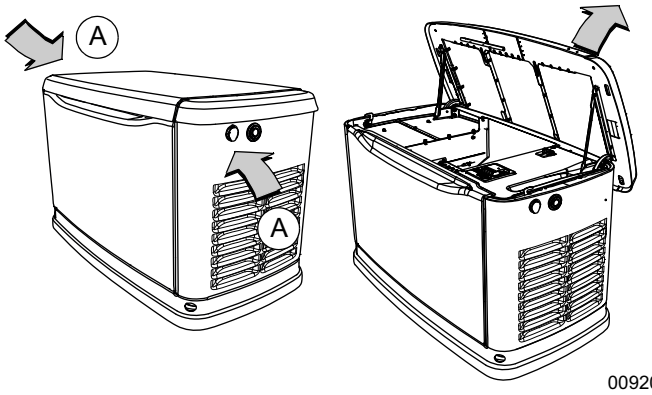

Figure 3-1. Opening the Lid

3. Press down on lid above side lock, and unlock latch to correctly open lid.
4. Repeat for other side. Lid may appear stuck if pressure is not applied from the top.

NOTE: Always verify side locks are unlocked before attempting to lift lid.

Front Access Panel Removal

See ***Figure 3-2***. Remove front access panel (A) by lifting straight up and out once lid is open.

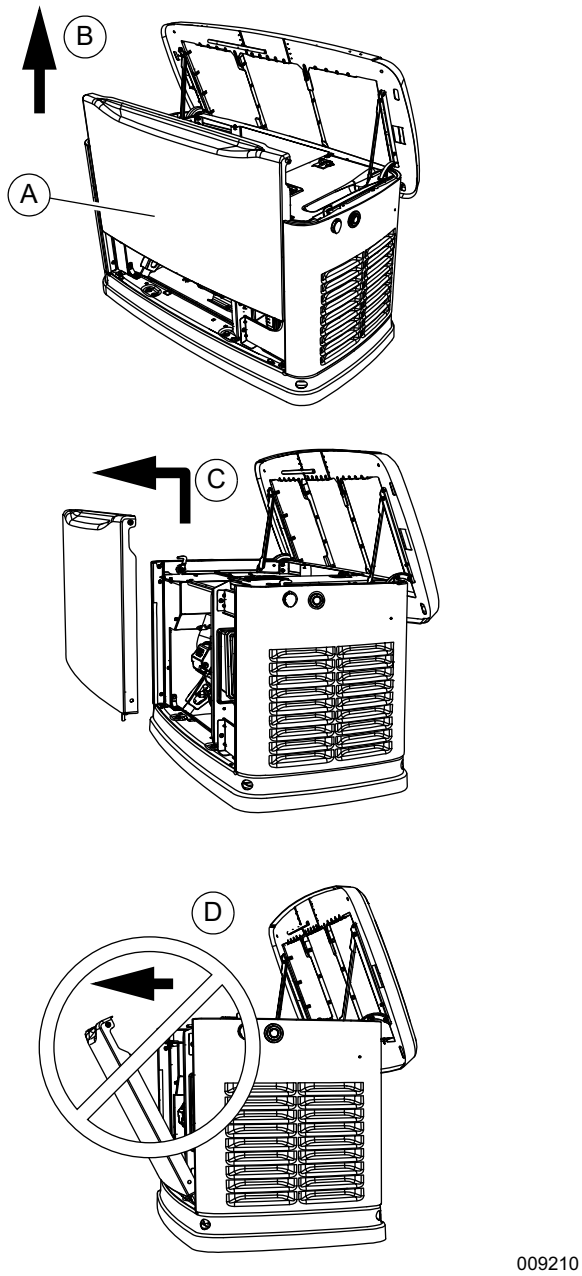

Figure 3-2. Remove Front Access Panel

NOTE: Always lift front access panel straight up before pulling away from enclosure (B and C). Do not pull panel away from the enclosure before lifting up (D).

Intake Side Panel Removal

See ***Figure 3-3***. Intake side panel (A) must be removed to access battery compartment, fuel regulator, and sediment trap.

1. Raise lid and remove front panel.
2. Use a hex key to remove two mounting screws (B) and L-bracket screw (C).
3. Lift intake panel up and away from generator.

NOTE: Always lift intake side panel straight up before pulling away from enclosure. Do not pull panel away from enclosure before lifting up (D).

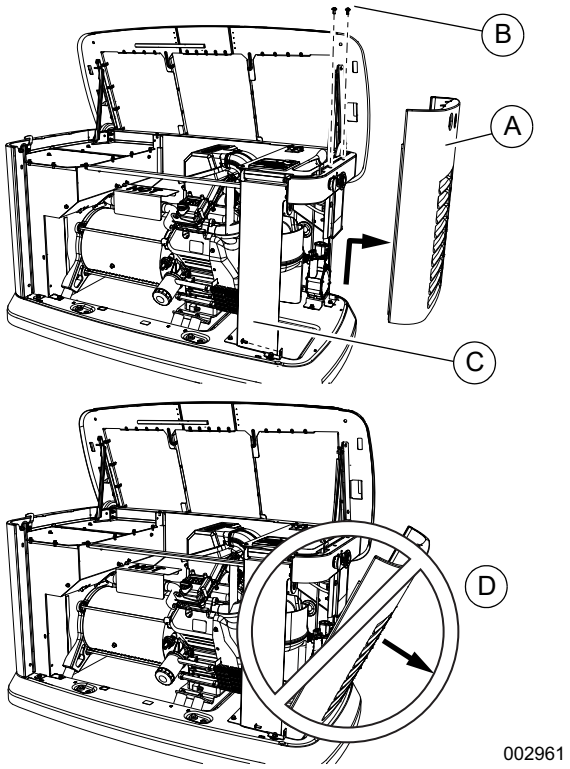

Figure 3-3. Intake Side Panel Removal

Main Line Circuit Breaker (Generator Disconnect)

See ***Figure 3-4***. This is a 2-pole main line circuit breaker (MLCB) (generator disconnect) (A) rated according to relevant specifications.

The MLCB (generator disconnect) can be locked in OFF (OPEN) for security. Use an appropriately-sized padlock (not included) with a shackle long enough to pass through both lock tabs (B).

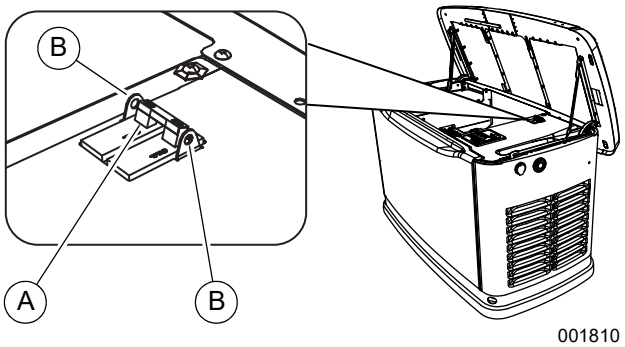

Figure 3-4. Main Line Circuit Breaker (MLCB)

NOTE: DO NOT leave MLCB (generator disconnect) locked in OFF (OPEN) during normal generator operation. Leaving MLCB (generator disconnect) in OFF (OPEN) will prevent generator from powering structure during a power outage when placed in AUTO mode.

LED Indicator Lights

See ***Figure 3-5***. Three LEDs are visible behind a translucent lens on the generator side panel. These LEDs indicate generator operating status.

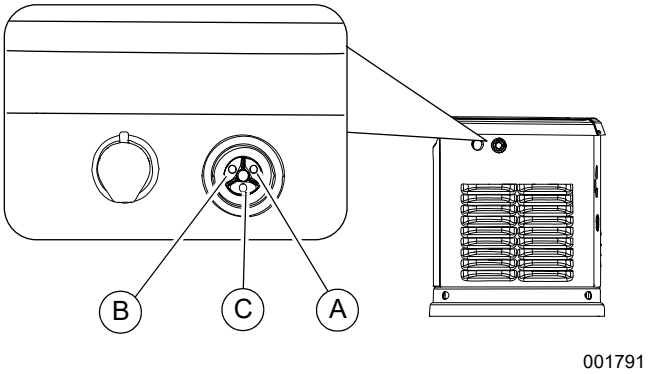

Figure 3-5. LED Indicator Lights

- Green LED “Ready” light (A) illuminates when utility is present and control panel is in AUTO. LED flashes when automatic transfer switch converts to generator power during a utility power outage.
- Red LED “Alarm” light (B) illuminates when generator is OFF or a fault is detected. Contact an IASD.
- Yellow LED “Non-Critical Alert” light (C) illuminates when maintenance is required.

NOTE: Yellow LED may be illuminated at the same time as either the red or green LED.

Auxiliary Shutdown Switch

⚠CAUTION

Equipment Damage. The auxiliary shutdown switch is not to be used to power down the unit under normal operating circumstances. Doing so will result in equipment damage.

(000399)

All generators are equipped with an external means of shutting down the generator which complies with the latest NEC code requirement. Primary generator shutdown sequence is described in ***Shutting Generator Down While Under Load or During a Utility Outage***.

See ***Figure 3-6***. An auxiliary shutdown switch (A) is located on the exterior of the generator back panel. This auxiliary shutdown switch shuts down generator and disables restarts.

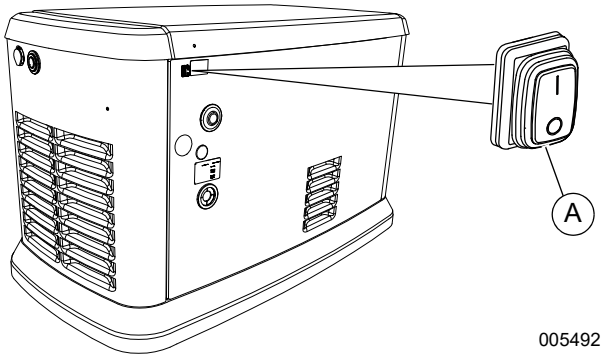

Figure 3-6. External Auxiliary Shutdown Switch (all models)

NOTE: Whenever possible, perform primary shutdown procedure before disabling generator with auxiliary shutdown switch.

See ***Figure 3-7***. 13–22 kW generators also have an auxiliary shutdown switch (A) located inside generator.

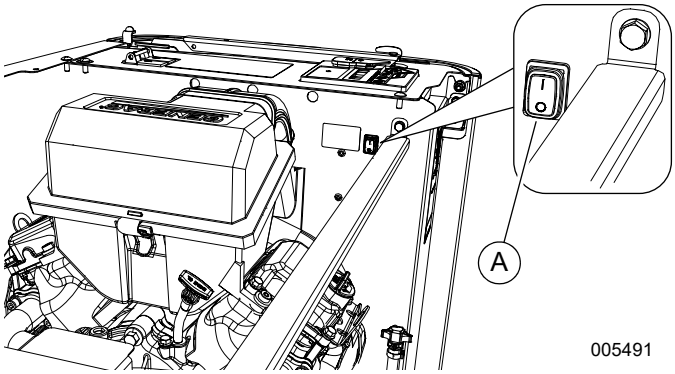

Figure 3-7. Internal Auxiliary Shutdown Switch (13–22kW)

NOTE: Generator will not start if either switch is OPEN (O). Controller displays an “Auxiliary Shutdown” alarm, and red LED “Alarm” light illuminates. To clear this condition, set switch or switches to CLOSED (I). Clear alarm by pressing OFF button, and then ENTER. The generator can then be placed in AUTO or MANUAL.

Control Panel Interface

See ***Figure 3-8***. The control panel interface (A) is located under the enclosure lid. Verify both left and right side locks are unlocked before attempting to lift lid of enclosure. Open lid as directed in ***Opening the Lid***.

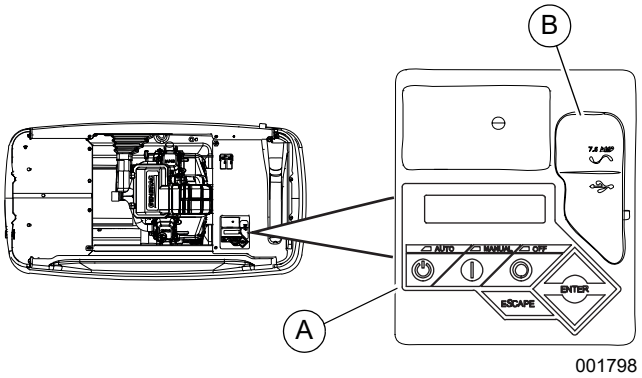

Figure 3-8. Generator Control Panel

The 7.5A fuse is located beneath rubber cover (B) to the right of the control panel.

Verify both left and right side locks are securely out of the way before closing unit.

All appropriate panels must be in place during any operation of the generator. This includes operation by a servicing technician while conducting troubleshooting procedures.

Using the AUTO/OFF/MANUAL Interface

Button	Description of Operation
AUTO	Activates fully automatic system operation. Allows unit to automatically start and exercise generator according to exercise timer (see ***Setting the Exercise Timer***). Green LED flashes when automatic transfer switch converts to generator power during a utility power outage.
OFF	Shuts down engine and prevents automatic operation of unit.
MANUAL	Cranks and starts generator. Transfer to standby power will not occur unless there is a utility failure. Blue LED flashes when automatic transfer switch converts to generator power during a utility power outage.

NOTE: Damage caused by mis-wiring of interconnect wires is not warrantable.

Operating Modes

Mode	Description
MANUAL	• Will not transfer to standby if utility is present. • Transfers to standby if utility drops below 65% of nominal for five consecutive seconds (dealer programmable) after warm-up. • Transfers back when utility returns for 15 consecutive seconds (dealer programmable). Engine continues to run until removed from MANUAL.
AUTO	• Starts and runs if utility drops for five consecutive seconds (dealer programmable). • Starts an engine warm-up timer (duration varies when ***Cold Smart Start*** is enabled). –Will not transfer if utility subsequently returns. –Transfers to standby if utility is not present. • Transfers to utility once utility returns (above 80% of nominal) for 15 consecutive seconds (dealer programmable). • Will not transfer to utility unless utility returns. Unit will shut down if OFF button is pressed or a shutdown alarm is present. • Unit will shut down after one minute cool-down time when utility power returns.
EXERCISE	• Will not exercise if unit is already running in either AUTO or MANUAL. • During exercise, controller will only transfer if utility drops during exercise for five seconds (dealer programmable), and will switch to AUTO.

Interface Menu Displays

LCD Panel

Feature	Description
HOME page	Default page displayed if no buttons are pressed for 60 seconds. Normally shows current status message, and current date and time. Highest priority active alarm/warning is automatically posted on this page, as well as flashing the backlight when such a condition is detected. In the case of multiple alarms/warnings, only first message is displayed. Press OFF button and then ENTER button to clear an alarm or warning. When “Hours of Protection” is displayed, this represents total time generator has been monitoring utility supply and ready to provide backup power if needed.
Display Backlight	Normally off. The backlight will automatically illuminate and remain on for 30 seconds if operator presses any button.
MAIN MENU page	Allows operator to navigate to all other pages or sub-menus by using arrow keys and ENTER button. Page can be accessed at any time with several presses of the dedicated ESCAPE button. Each press of the ESCAPE button takes operator to previous menu until MAIN MENU displays. This page contains information for History; Status; Edit; and Debug.

Menu System Navigation

Press ESCAPE button from any page to access the MENU. You may need to press the ESCAPE button several times before reaching the MENU page. Navigate to the desired menu by using the ↑/↓ buttons. Press ENTER button when desired menu is displayed and flashing,

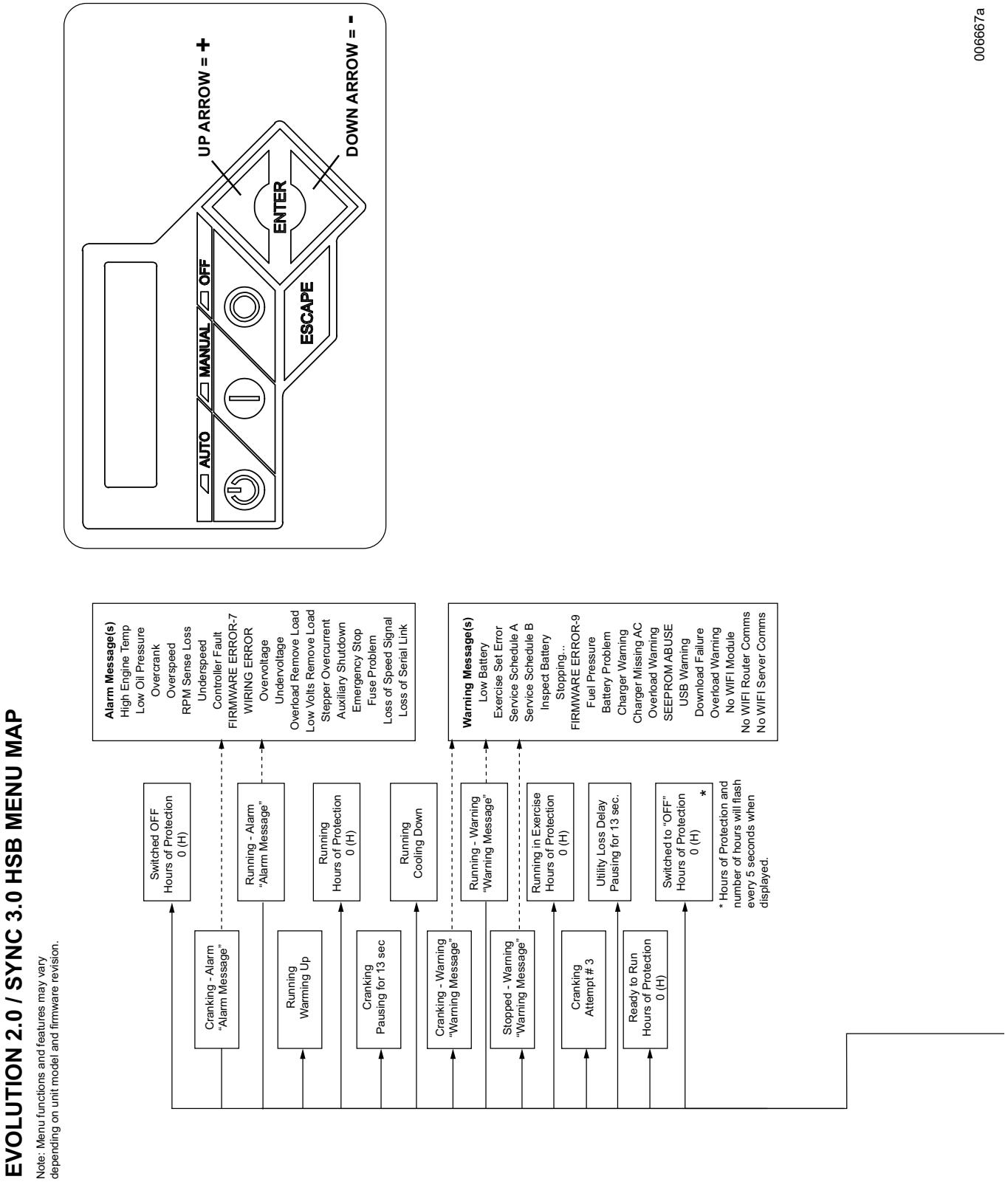

Figure 3-9. Navigation Menu

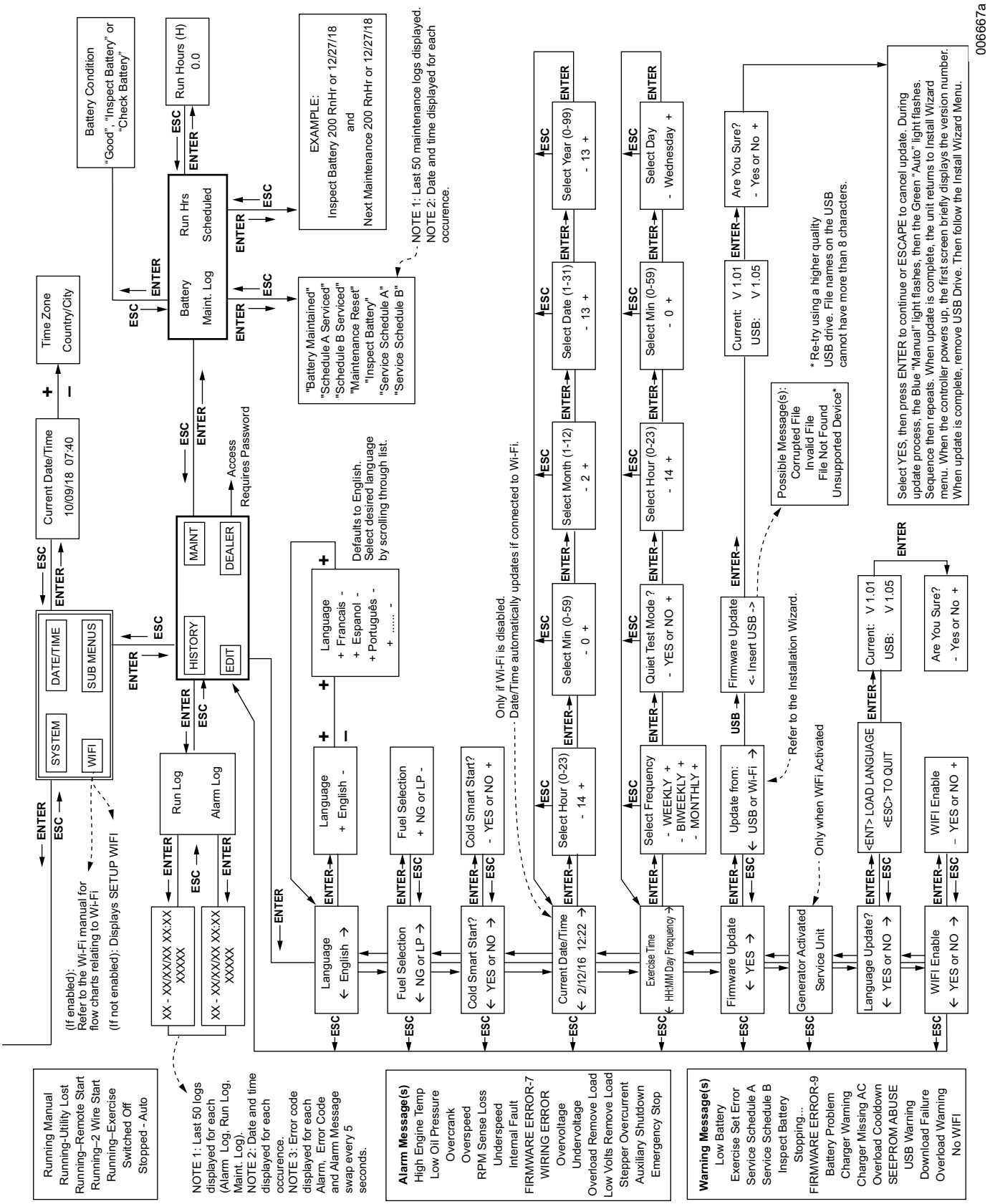

Figure 3-10. Navigation Menu

Setting the Exercise Timer

This generator is equipped with a configurable exercise timer. Configuration can be performed directly at the control panel or though the Mobile Link™ application. There are two settings for the exercise timer:

Day/Time: Generator will start and exercise for period defined, on day of week and at time of day specified. During this exercise period, unit runs for approximately five minutes and then shuts down.

Exercise frequency: Exercise frequency can be set to Weekly, Biweekly, or Monthly. If Monthly is selected, day of month must be selected from 1–28. Generator will exercise on that day each month. Transfer of loads to generator output does not occur during exercise cycle unless utility power is lost.

NOTE: If Wi-Fi is enabled, exercise timer will automatically adjust for Daylight Saving Time.

NOTE: The exercise feature will operate only when generator is in AUTO, and will not work unless this procedure is performed. If Wi-Fi is NOT enabled, current date/time will need to be reset every time the 12 volt battery is disconnected and then reconnected, and/or when the fuse is removed.

Low Speed Exercise (Quiet-Test™) Profile: Unit will run at operating speed for approximately five seconds, then drop speed to prepare for Quiet-Test. Speed will drop to predetermined Quiet-Test speed after approximately 40 seconds and continue to run until Quiet-Test is complete, a total of five minutes.

Table 3-1 details exercise information and programming options for all home standby generators.

NOTE: If Quiet-Test is disabled, generator will exercise at the rated rpm.

Table 3-1. Generator Exercise Characteristics

Generator Size	10–22 kW
Exercise Frequency Options	Weekly/Bi-Weekly/Monthly
Exercise Time Length	5 minutes

Battery Charger

IMPORTANT NOTE: Contact an IASD if controller screen displays "CHARGER MISSING AC."

NOTE: Battery charger is integrated into the control module in all models.

The battery charger operates as a smart charger which verifies:

- output is continually optimized to promote maximum battery life.
- charging levels are safe.

NOTE: A warning is displayed on LCD when battery needs service.

NOTE: Do not use external battery chargers.

Manual Transfer Operation

DANGER

Electrocution. Do not manually transfer under load. Disconnect transfer switch from all power sources prior to manual transfer. Failure to do so will result in death or serious injury, and equipment damage. (000132)

Prior to automatic operation, manually exercise transfer switch to verify there is no interference with correct operation of the mechanism. Manual operation of transfer switch is required if electronic operation should fail.

Transfer to Generator Power Source

1. Verify generator is OFF.
2. Set generator MLCB (generator disconnect) to OFF (OPEN).
3. Turn off utility power supply to transfer switch using means provided (such as a utility MLCB).
4. See ***Figure 3-11***. Use manual transfer handle (A) inside transfer switch to move main contacts to STANDBY (loads connected to standby power source).

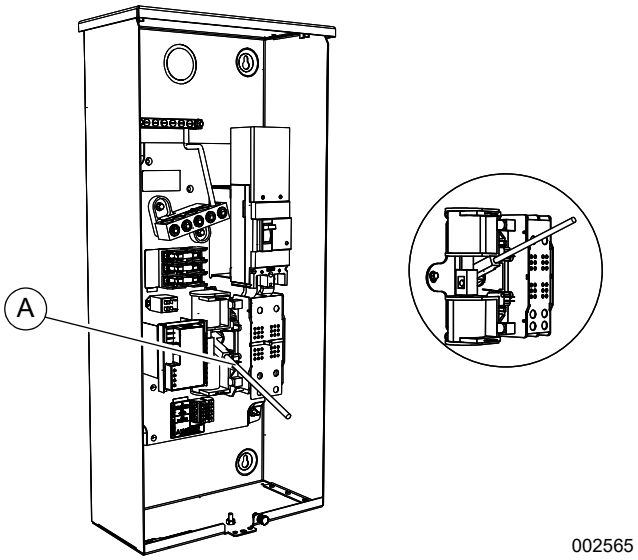

Figure 3-11. Typical Manual Transfer Switch Operation

5. Press MANUAL button on control panel to crank and start engine.
6. Allow engine to stabilize and warm up for a few minutes.

7. Set generator MLCB (generator disconnect) to ON (CLOSED). Standby power source now powers loads.

Transfer to Utility Power Source

Shut down generator and transfer to utility source after utility power has been restored. Proceed as follows to manually transfer to utility power and shut down generator:

1. Set generator MLCB (generator disconnect) to OFF (OPEN).
2. Run engine for one minute at no-load to stabilize internal temperature.
3. Press OFF button on control panel. Engine will shut down.
4. Verify utility power supply to transfer switch is turned off.
5. Set main contacts to UTILITY (loads connected to utility power source) using manual transfer handle (A in ***Figure 3-11***) inside transfer switch.
6. Turn on utility power supply to transfer switch using means provided.
7. Press AUTO button on control panel.
8. Set generator MLCB (generator disconnect) to ON (CLOSED).
9. Close and lock lid.

Automatic Transfer Operation

Proceed as follows to select automatic operation:

1. Verify transfer switch main contacts are set to UTILITY (loads connected to utility power source).
2. Verify normal utility power source voltage is available to loads connected to transfer switch.
3. Press AUTO button on control panel.
4. Set generator MLCB (generator disconnect) to ON (CLOSED).

Generator will start automatically when utility source voltage drops below a preset level. Loads are transferred to standby power source after unit starts.

Automatic Sequence of Operation

Utility Failure

If generator is set to AUTO when utility fails (below 65% of nominal), a five second (dealer programmable) line interrupt delay time is started. The engine cranks and starts if utility power is still unavailable when timer expires. An engine warm-up timer will be initiated once engine is started. Timer duration varies depending on whether or not ***Cold Smart Start*** is enabled. The controller will transfer load to generator when warm-up time expires. If utility power is restored (above 80% nominal) at any time from initiation of engine start until generator is ready to accept load (warm-up time has not elapsed), the controller completes start cycle and runs generator through its normal cool down cycle. However, load will remain on utility source.

Cranking

The system will control the cyclic cranking as follows:

- **10 kW Unit:** five cranking cycles as follows: 15 seconds cranking, seven seconds resting, followed by four additional cycles of seven seconds cranking followed by seven seconds resting.
- **13–22 kW Units:** five cranking cycles as follows: 16 seconds cranking, seven seconds resting, 16 seconds cranking, seven seconds resting, followed by three additional cycles of seven seconds cranking followed by seven seconds resting.

NOTE: An alarm will be triggered if generator does not start after these five attempts.

Cold Smart Start

Cold Smart Start is factory-enabled, but can be disabled in the EDIT menu. Generator will monitor ambient temperature when Cold Smart Start is enabled. The warm-up delay will be adjusted based on prevailing conditions.

See ***Table 3-2***. If ambient temperature is below a fixed temperature (based on model) upon startup in AUTO, generator will warm up for 30 seconds. This allows engine to warm before a load is applied. The generator will startup with normal warm-up delay of five seconds if ambient temperature is at or above the fixed temperature.

Table 3-2. Cold Smart Start Set Points

Generator Size	10 kW–20 kW	22 kW
Fixed Temperature	50 °F (10 °C)	20 °F (-7 °C)

A check for correct output voltage buildup will be performed when generator engine is started.

Cleaning Cycle

If some condition impedes normal voltage creation, such as frost crystals or dust/dirt preventing a good electrical connection, start sequence will be interrupted so a cleaning cycle of the internal electrical connections can be attempted.

Cleaning cycle is an extended warm up period which lasts for several minutes while normal generator voltage output is determined to be low. During this cycle, generator controller will display “Warming Up” on the display screen.

The generator controller display will show “Under Voltage” if cleaning cycle fails to clear the obstruction. After several minutes, alarm message can be cleared, and the generator restarted.

If the problem persists, make no further attempts to start. Contact an IASD.

Load Transfer

The transfer of load when generator is running is dependent upon operating mode.

Shutting Generator Down While Under Load or During a Utility Outage

DANGER

Automatic start-up. Disconnect utility power and render unit inoperable before working on unit. Failure to do so will result in death or serious injury.

(000191)

IMPORTANT NOTE: To avoid equipment damage, follow these steps, in order, during utility outages. Shutdowns may be required during utility outages to perform routine maintenance or to conserve fuel.

To turn generator OFF:

1. Set utility MLCB to OFF (OPEN).
2. Set generator MLCB (generator disconnect) to OFF (OPEN).
3. Allow generator to run for cool-down for approximately one minute.
4. Set generator to OFF at the controller.
5. Remove 7.5A fuse from controller.

To turn generator back ON:

1. Install 7.5A fuse in controller.
2. Verify generator MLCB (generator disconnect) is OFF (OPEN).
3. Set generator to AUTO mode at the controller.
4. Generator will start and run. Allow generator to run and warm up for a few minutes.
5. Set generator MLCB (generator disconnect) to ON (CLOSED).
6. Set utility MLCB to ON (CLOSED).

The system now operates in automatic mode.

This page intentionally left blank.

Section 4: Maintenance

Maintenance

Regular maintenance will improve performance and extend engine/equipment life. Generac Power Systems, Inc. recommends that all maintenance work be performed by an Independent Authorized Service Dealer (IASD). Regular maintenance, replacement, or repair of the emissions control devices and systems may be performed by any repair shop or person of the owner's choosing. To obtain emissions control warranty service free of charge, the work must be performed by an IASD. See the emissions warranty.

Preparing for Maintenance

DANGER

Automatic start-up. Disconnect utility power and render unit inoperable before working on unit. Failure to do so will result in death or serious injury.

(000191)

WARNING

Equipment damage. Only qualified service personnel may install, operate, and maintain this equipment. Failure to follow proper installation requirements could result in death, serious injury, and equipment or property damage.

(000182a)

Proceed as follows to prepare for maintenance:

1. Set utility MLCB to OFF (OPEN).
2. Lift lid and set generator MLCB (generator disconnect) to OFF (OPEN).
3. If running during a utility outage, allow generator to run and cool down for one minute with no load.
4. Press OFF button on controller.
5. Remove 7.5A fuse from control panel.
6. Remove front panel and intake side panel.

Performing Scheduled Maintenance

It is important to perform maintenance as specified in the ***Service Schedule*** for correct generator operation. Engine oil and oil filter must be changed, and valve clearance adjusted (where applicable, see ***Engine***) after first 25 hours of operation.

Emissions-critical maintenance must be performed as scheduled in order for emissions warranty to be valid. Emissions-critical maintenance consists of servicing the air filter and spark plug(s) in accordance with ***Service Schedule***.

Controller will prompt for Schedule A or Schedule B maintenance to be performed. Schedule A maintenance consists of oil, oil filter, and battery check. Schedule B maintenance includes oil, oil filter, battery check, air cleaner, spark plug(s), and valve clearance (where applicable, see ***Engine***).

Since most maintenance alerts occur at the same time (most have two year intervals), only one will appear on control panel display at a time. Once first alert is cleared, the next active alert will be displayed.

Service Schedule

Service	Daily If Running Continuously or Before Each Use	Every Year	Schedule A Every Two Years or 200 Hours	Schedule B Every Four Years or 400 Hours
Inspect enclosure louvers for dirt and debris *	●			
Inspect lines and connections for fuel or oil leaks	●			
Inspect engine oil level	●			
Inspect for water intrusion **		●		
Perform fuel system leak test		●		
Inspect battery condition, electrolyte level, and state of charge		●	●	●
Replace engine oil and oil filter †			●	●
Replace engine air filter				●
Clean; inspect spark plug gap; replace if necessary				●
Inspect/adjust valve clearance (where applicable) ‡				●
Inspect/clean sediment trap	*See local codes and guidelines.*			

Contact the nearest IASD for assistance if necessary.

* Remove any shrubs or tall grasses which have grown within 3 ft (0.91 m) of intake and discharge louvers on enclosure sides. Clean any debris (dirt, grass clippings, etc.) which may have accumulated inside enclosure.

** Verify all sources of potential water intrusion such as water sprinklers, roof run-off, rain gutter downspouts, and sump pump discharges are directed away from generator enclosure.

† Change engine oil and filter after first 25 hours of operation. In cold weather conditions (ambient below 40 °F [4.4 °C]), or if unit is operated continuously in hot weather conditions (ambient above 85 °F [29.4 °C]), change engine oil and filter every year or 100 hours of operation.

‡ Inspect/adjust valve clearance after first 25 hours of operation. (Excludes units with hydraulic lifters. See ***Engine***.)

NOTE: Contact an IASD or visit ***www.generac.com*** for additional information on replacement parts.

Maintenance Log

Battery Inspection and Charge Check

Dates Performed:

Oil, Oil Filter, Air Filter, and Spark Plug Replacement

Dates Performed:

Valve Adjustment

NOTE: Not required on 13 or 16 kW units with 816cc engines.

Dates Performed:

Checking Engine Oil Level

WARNING

Risk of burns. Allow engine to cool before draining oil or coolant. Failure to do so could result in death or serious injury.

(000139)

WARNING

Skin irritation. Avoid prolonged or repeated contact with used motor oil. Used motor oil has been shown to cause skin cancer in laboratory animals. Thoroughly wash exposed areas with soap and water.

(000210)

CAUTION

Engine damage. Verify proper type and quantity of engine oil prior to starting engine. Failure to do so could result in engine damage.

(000135)

IMPORTANT NOTE: Verify oil level daily when power outages necessitate running generator for extended periods. Generator will shut down if oil level is low.

Proceed as follows to check engine oil level:

1. Set utility MLCB to OFF (OPEN).
2. Set generator MLCB (generator disconnect) to OFF (OPEN).
3. Allow generator to run for a cool-down period of approximately one minute, if generator was running during an outage.
4. Press OFF button to turn generator off. Wait five minutes.
5. See ***Figure 2-1***, ***Figure 2-2***, or ***Figure 2-3***. Remove oil dipstick and wipe it dry with a clean cloth.
6. Completely insert oil dipstick into oil dipstick tube and remove.
7. Observe oil level. The level should be at FULL mark on oil dipstick.
8. If necessary, remove oil fill cap and add recommended oil to engine (with oil dipstick removed) until level reaches FULL mark. Insert oil dipstick and install fill cap. See ***Engine Oil Requirements***.

To restart generator:

1. Press AUTO button on control panel.
2. Allow generator to start and warm up for a few minutes.
3. Set generator MLCB (generator disconnect) to ON (CLOSED).

The system is now operating in AUTO. The main utility disconnect can be turned ON (CLOSED).

Engine Oil Requirements

CAUTION

Engine damage. Verify proper type and quantity of engine oil prior to starting engine. Failure to do so could result in engine damage.

(000135)

Engine oil should be serviced in accordance with the recommendations of this manual to maintain product warranty. Generac Maintenance Kits are available consisting of engine oil, oil filter, air filter, spark plug(s), a shop towel, and a funnel. These kits can be obtained from an IASD.

All Generac oil kits meet minimum American Petroleum Institute (API) Service Class SJ, SL, or better. Do not use special additives.

Synthetic SAE 5W-30 for all temperature ranges. See ***Engine***.

Changing the Oil and Oil Filter

Proceed as follows to change oil and oil filter:

1. Lift lid and press MANUAL button on control panel to start engine, and run until it is thoroughly warmed up. Press OFF button on control panel to shut down engine.
2. See ***Figure 4-1***, ***Figure 4-2***, or ***Figure 4-3***. Remove front panel when unit has cooled. Pull oil drain hose (A) free of retaining clip. Remove cap from oil drain hose and drain oil into a suitable container.

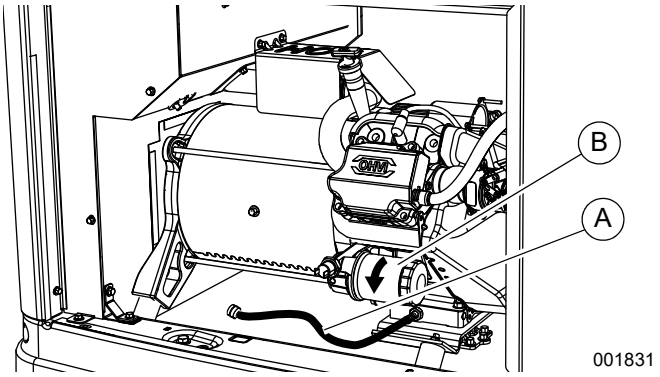

Figure 4-1. Oil Filter and Drain Location (10 kW)

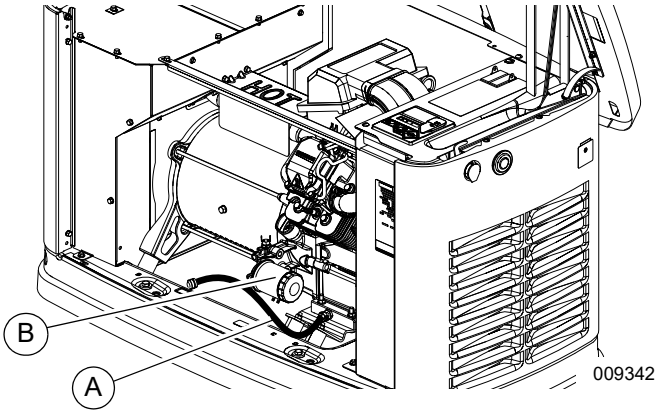

Figure 4-2. Oil Filter and Drain Location (13–16 kW)

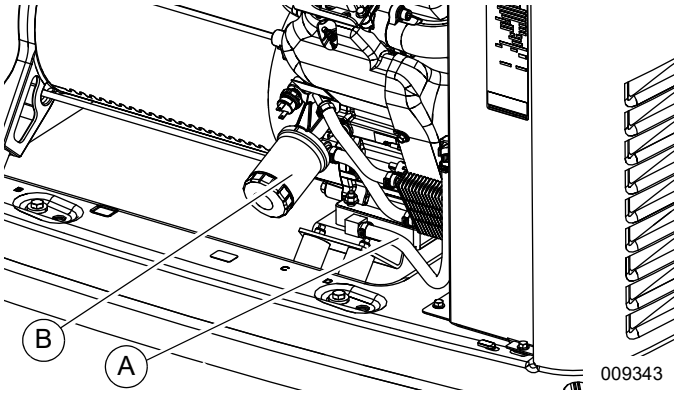

Figure 4-3. Oil Filter and Drain Location (20–22 kW)

3. Install cap on oil drain hose. Position and secure oil drain hose with a retaining clip.
4. Remove oil filter (B) by turning it counterclockwise.
5. Apply a light coating of clean engine oil to gasket of new filter.
6. Screw new filter on by hand until gasket lightly contacts oil filter adapter. Tighten filter an additional three-quarter to one full turn.
7. Fill engine with recommended oil. See ***Engine Oil Requirements***.
8. Press MANUAL button on control panel to start engine. Run for one minute, and inspect for leaks.
9. Press OFF button on control panel to stop engine. Wait five minutes.
10. Inspect oil level. Add oil as needed. DO NOT OVERFILL.
11. Insert oil dipstick and/or attach fill cap.
12. Press AUTO button on control panel to return unit to AUTO.
13. Close and lock lid.
14. Dispose of used oil and filter according to national, state, or local codes.

Servicing the Air Cleaner

Proceed as follows to service air cleaner:

1. Lift lid and press OFF button on control panel to stop generator. Remove front panel.
2. See ***Figure 4-4*** or ***Figure 4-5***. Remove cover clips (A) and air cleaner cover (B).

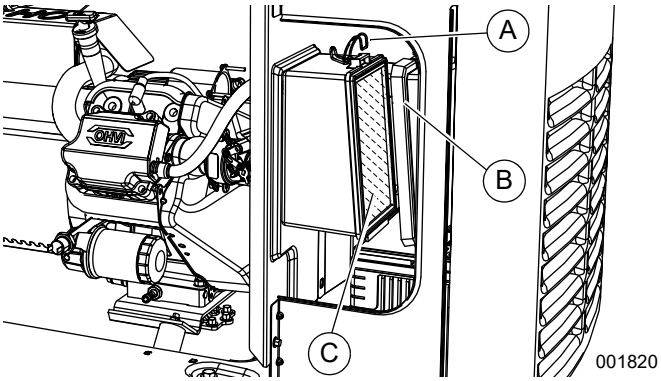

Figure 4-4. Servicing Air Cleaner (10 kW)

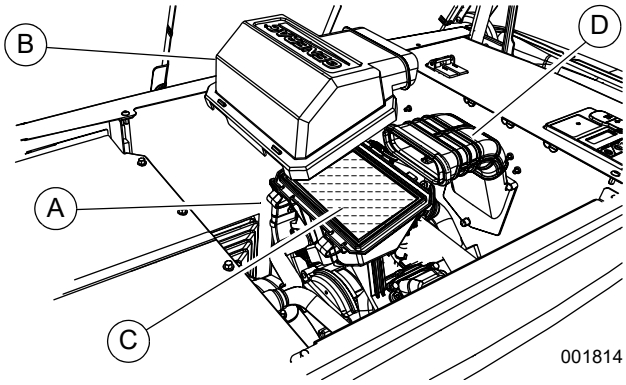

Figure 4-5. Servicing Air Cleaner (13–22 kW)

3. Remove old air filter element (C) and discard.
4. Thoroughly clean air cleaner enclosure of any dust or debris.
5. Install a new air filter element.
6. Install air cleaner cover and fasten cover clips.
7. **(13–22 kW units only):** Verify air inlet duct (D) is correctly connected to air cleaner cover.
8. Press AUTO button on control panel to return unit to AUTO.

Spark Plug(s)

Proceed as follows to inspect spark plug gap(s) and replace spark plug(s) as necessary:

1. With generator OFF and engine cool, lift lid and remove front panel.
2. Clean area around base of spark plug(s) to keep dirt and debris out of engine.

3. Remove spark plug(s) and inspect. Install new plug(s) if existing plug(s) is worn or if reuse is questionable.
4. Clean plug(s) by scraping or washing with a wire brush and commercial solvent. Do not blast plug(s) to clean.

NOTE: Clean spark plug in emergency situations only. Otherwise, replace spark plug.

5. See ***Figure 4-6***. Inspect spark plug gap using a wire feeler gauge. Replace spark plug if gap is out of specification. See ***General Information***.

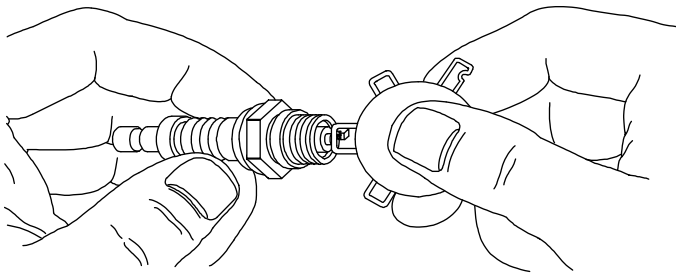

000211

Figure 4-6. Spark Plug Gap Measurement

NOTE: New spark plugs should have spark plug gap checked prior to installation.

6. Install spark plug(s), and tighten to 18.4 ft-lbs (25 Nm).
7. Press AUTO button to return unit to AUTO mode.

Valve Clearance Adjustment

IMPORTANT NOTE: Contact an IASD for service assistance. Correct valve clearance is essential for prolonging the life of the engine. Excludes units equipped with hydraulic lifters. See *Engine*.

IMPORTANT NOTE: Valve lash not required on 13 or 16 kW units with 816cc engine. See *Engine*.

Inspect valve clearance after first 25 hours of operation, then after 400 hour intervals. Adjust if necessary.

Checking Valve Clearance

WARNING

Risk of Burn. Allow the engine to cool before performing the following procedure. Failure to do so could result in serious injury.

(000560)

WARNING

Accidental Start-up. Disconnect the negative battery cable, then the positive battery cable when working on unit. Failure to do so could result in death or serious injury.

(000130)

WARNING

Accidental start-up. Disconnect spark plug wires when working on unit. Failure to do so could result in death or serious injury.

(000141)

NOTE: Engine should be cool before checking valve clearance. Adjustment is not needed if valve clearance is within dimensions provided in ***Engine***.

Proceed as follows to check valve clearance.

1. Close fuel valve and disconnect battery to avoid accidental startup.
2. Remove spark plug wire(s), and position wire(s) away from plug(s).
3. Remove spark plug(s).
4. Remove the four screws attaching the valve cover. Remove and discard gasket. (Repeat for second cylinder, if equipped.)
5. Verify piston is at top dead center (TDC) of its compression stroke (both valves closed). To move piston to TDC, remove intake baffle at the front of the engine to access the flywheel nut. Use a large socket and socket wrench to rotate flywheel nut clockwise, which will rotate the crankshaft. Watch piston through spark plug hole. Piston will move up and down. Piston is at TDC when at its highest point of travel.

6. See ***Figure 4-7*** or ***Figure 4-8***. Inspect valve clearance between each rocker arm (E) and valve stem (F) with a feeler gauge.

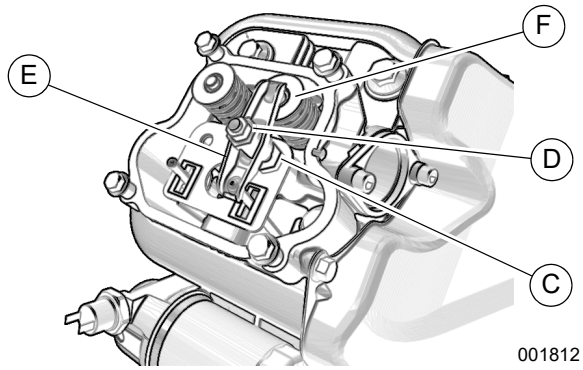

Figure 4-7. Valve Clearance Adjustment (10 kW)

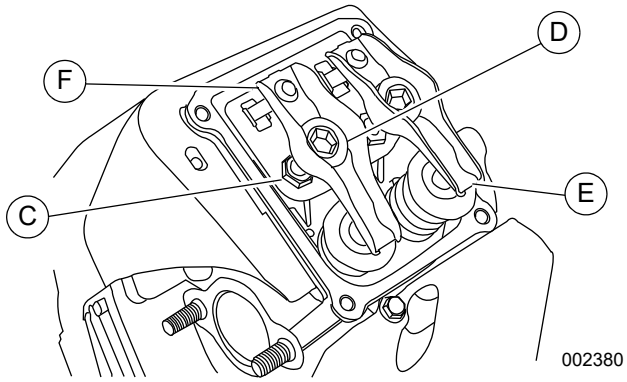

Figure 4-8. Valve Clearance Adjustment (20–22 kW)

7. Install replacement valve cover gasket(s).
8. Install valve cover(s). Tighten fasteners in a cross pattern, tightening to:

10 kW	80 **in-lbs** (9.0 Nm)
20–22kW	60 **in-lbs** (6.8 Nm)

Adjusting Valve Clearance

WARNING

Risk of Burn. Allow the engine to cool before performing the following procedure. Failure to do so could result in serious injury.

(000560)

See ***Figure 4-7*** or ***Figure 4-8***. Proceed as follows to adjust valve clearance:

NOTE: Allow engine to cool before adjusting valve clearance.

1. Remove spark plug wire(s) and position wire(s) away from plugs.
2. Remove spark plug(s).
3. Remove the four screws attaching valve cover. Remove and discard gasket.
4. Verify piston is at TDC of its compression stroke (both valves closed).
5. Loosen rocker jam nut (C) using a 10 mm wrench (10 kW units) or 13 mm wrench (20–22 kW units.)
6. Turn pivot ball stud (D) using a 14 mm wrench (10 kW units), or 10 mm hex key (20–22 kW units) while inspecting clearance between rocker arm (E) and valve stem (F) with a feeler gauge. Adjust clearance as per ***Engine***.

NOTE: Hold rocker jam nut in place as pivot ball stud is turned.

7. When valve clearance is correct, hold pivot ball stud (D) in place with a wrench and tighten rocker arm jam nut. Tighten jam nut according to:

10 kW	53 **in-lbs** (6.0 Nm)
20–22kW	174 **in-lbs** (19.68 Nm)

8. After tightening jam nut, inspect valve clearance to verify it did not change.
9. Install new valve cover gasket.
10. Install valve cover. Tighten fasteners in a cross pattern. Tighten to:

10 kW	80 **in-lbs** (9.0 Nm)
20–22kW	60 **in-lbs** (6.8 Nm)

NOTE: Start all four screws before tightening, or it will not be possible to get all screws in place. Verify valve cover gasket is in place.

11. Install spark plugs and tighten to 18 ft-lbs (25 Nm).
12. Attach spark plug wire to spark plug.
13. Repeat process for other cylinder if equipped.

Battery Maintenance

DANGER

Electrocution. Do not wear jewelry while working on this equipment. Doing so will result in death or serious injury.

(000188)

WARNING

Explosion. Do not dispose of batteries in a fire. Batteries are explosive. Electrolyte solution can cause burns and blindness. If electrolyte contacts skin or eyes, flush with water and seek immediate medical attention.

(000162)

⚠WARNING

Explosion. Batteries emit explosive gases while charging. Keep fire and spark away. Wear protective gear when working with batteries. Failure to do so could result in death or serious injury. (000137a)

⚠WARNING

Electrical shock. Disconnect battery ground terminal before working on battery or battery wires. Failure to do so could result in death or serious injury. (000164)

⚠WARNING

Risk of burns. Batteries contain sulfuric acid and can cause severe chemical burns. Wear protective gear when working with batteries. Failure to do so could result in death or serious injury. (000138a)

⚠WARNING

Environmental Hazard. Always recycle batteries at an official recycling center in accordance with all local laws and regulations. Failure to do so could result in environmental damage, death, or serious injury. (000228)

Always recycle batteries in accordance with local laws and regulations. Contact your local solid waste collection site or recycling facility to obtain information on local recycling processes. For more information on battery recycling, visit the Battery Council International website at: ***http://batterycouncil.org***

Strictly observe the following precautions when working on batteries:

- Remove 7.5A fuse from generator control panel.
- Disconnect battery charger as directed in ***Battery Maintenance***.
- Use tools with insulated handles.
- Wear rubber gloves and boots.
- Do not place tools or metallic objects on top of battery.
- Disconnect charging source prior to connecting or disconnecting battery terminals.
- Wear full eye protection and protective clothing.
- If electrolyte contacts skin, wash it off immediately with water.
- If electrolyte contacts eyes, flush thoroughly with water immediately and seek medical attention.
- Wash down spilled electrolyte with an acid neutralizing agent. A common practice is to use a solution of 1 lb (454 g) bicarbonate of soda to 1 gal (3.8 L) of water. Add bicarbonate of soda solution until evidence of reaction (foaming) has ceased. Flush resulting liquid with water and dry area completely.
- DO NOT smoke near battery.
- DO NOT cause flame or spark in battery area.
- Discharge static electricity from the body before touching battery by first touching a grounded metal surface.

Battery should be regularly inspected per ***Service Schedule***. Contact an IASD for assistance if necessary.

Inspecting the Battery

Proceed as follows to inspect battery:

1. Press OFF button to shut down generator, then lift lid and remove front panel.
2. Remove 7.5A fuse from control panel.
3. Remove intake side panel. (See ***Intake Side Panel Removal***.)
4. See ***Figure 4-9***. Inspect battery posts and cables for tightness and corrosion. Tighten and clean as necessary.

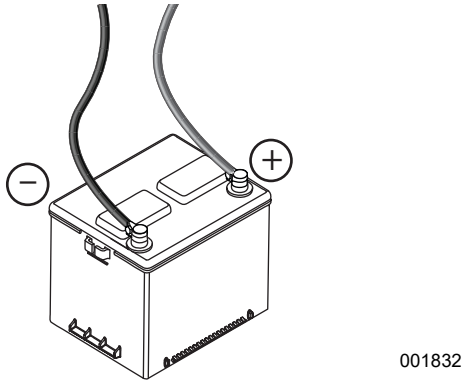

Figure 4-9. Battery Cables

5. **Unsealed batteries only:** Completely disconnect battery. Check battery fluid level and, if necessary, fill with distilled water only. DO NOT use tap water. Have an IASD or a qualified service technician verify state of charge and condition.
6. Connect battery cables, install intake side panel, and install 7.5 A fuse when inspection is complete.
7. Press AUTO button on controller.
8. Install front panel and close generator lid.

Cleaning the Sediment Trap

The sediment trap removes contaminants (moisture and fine particles) from gaseous fuels before they enter the fuel regulator. Accumulated moisture and particles must be emptied from the sediment trap per local codes and guidelines.

Proceed as follows to clean sediment trap:

1. Remove intake side panel. See ***Intake Side Panel Removal***.
2. Turn generator fuel supply OFF.
3. See ***Figure 4-10***. Unscrew and remove cap (A).

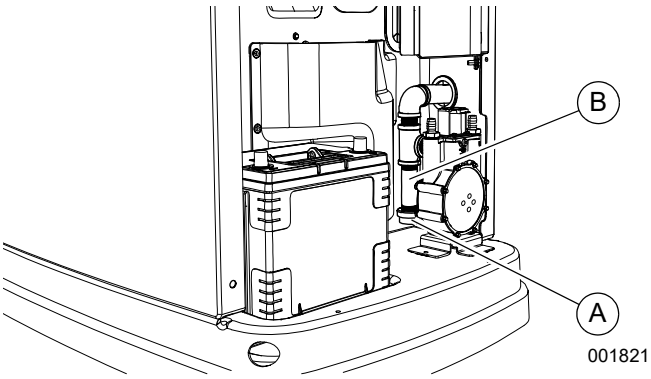

Figure 4-10. Cleaning the Sediment Trap

4. Use a clean-out tool (not provided) to remove accumulated moisture and particles from cap and body (B).
5. Wipe inside of each component with a clean, dry, lint-free cloth.
6. Seal threads of cap with appropriate sealing compound. Install cap and hand-tighten.
7. Tighten cap with an appropriately sized pipe wrench. DO NOT overtighten.
8. Turn generator fuel supply ON. Inspect for leaks by spraying all connection points with a non-corrosive gas leak detection fluid. The solution should not be blown away or form bubbles.
9. Install intake side panel.

Post Maintenance Checks

1. Perform required maintenance procedure(s).
2. Install intake side panel and front panel if removed. (See ***Intake Side Panel Removal*** and ***Front Access Panel Removal***.)
3. Install 7.5A fuse in control panel.
4. Complete Install Wizard information.
5. Press AUTO button on control panel. Allow unit to run for one minute with no load (if running during a utility outage).
6. Set generator MLCB (generator disconnect) to ON (CLOSED).
7. Set utility MLCB to ON (CLOSED).

The system is now in AUTO.

NOTE: If correct utility is present at this time, generator will perform its usual shutdown process.

Performing Fuel System Leak Test

DANGER

Explosion and fire. Fuel and vapors are extremely flammable and explosive. No leakage of fuel is permitted. Keep fire and spark away. Failure to do so will result in death or serious injury. (000192)

All products are factory-tested before shipping to verify the performance and integrity of the fuel system. However, it is important to perform a final fuel system leak test before starting the generator. The entire fuel system should be tested from supply to regulator.

See ***Figure 4-11***. Perform a final fuel system leak test after generator installation. The test will identify possible leaks at all connection points (A).

It is best practice to perform a fuel system leak test during normally-scheduled maintenance.

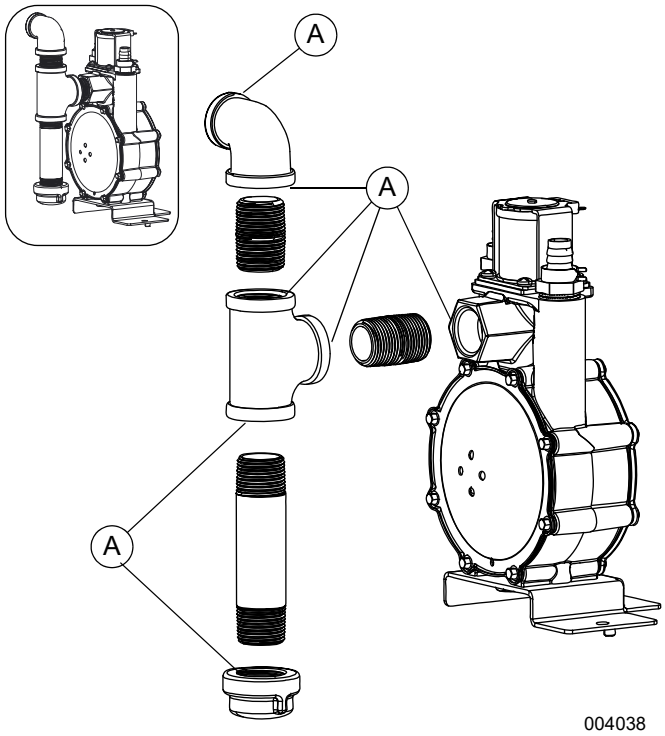

Figure 4-11. Connection Points to Leak Check

Inspect for leaks by spraying all connection points with a non-corrosive gas leak detection fluid. The solution should not be blown away or form bubbles.

Attention After Submersion

DO NOT start or operate generator if it has been submerged in water. Have an IASD thoroughly clean, dry, and inspect generator following any submersion in water. If the structure (home) has been flooded, it should be inspected by a certified electrician to verify there will not be any electrical problems during generator operation or when utility power is returned.

Corrosion Protection

Regular scheduled maintenance should be conducted to inspect unit for corrosion. Inspect all metal components of generator, including base frame, brackets, alternator can, the entire fuel system (inside and outside of the generator), and fastener locations. If there is corrosion found on generator components (e.g. regulator, engine/alternator mounts, fuel plenum, etc.), replace parts as necessary.

Periodically wash and wax enclosure using automotive type products. Do not spray unit with a hose or power washer. Use warm, soapy water and a soft cloth. Frequent washing is recommended in salt water/coastal areas. Spray engine linkages with a light oil such as WD-40.

Remove From and Return To Service Procedure

Remove From Service

⚠WARNING

Explosion. Batteries emit explosive gases. Always disconnect negative battery cable first to avoid spark. Failure to do so could result in death or serious injury. (000238)

If generator cannot be exercised monthly, at a minimum, and will be out of service longer than 90 days, proceed as follows to prepare generator for storage:

1. Start engine and allow it to warm up.
2. Close fuel shutoff valve in fuel supply line and allow engine to stop.
3. Set generator MLCB (generator disconnect) to OFF (OPEN) once engine has stopped.
4. Disconnect battery charger AC input T1/Neutral cable (with white sleeve) at controller.
5. Remove 7.5A fuse from generator control panel.
6. Disconnect battery cables. Remove negative battery cable first.
7. Drain oil completely while engine is still warm, and then fill crankcase with oil. See ***Engine Oil Requirements***.
8. Attach a tag to engine indicating viscosity and classification of the new oil in the crankcase.
9. Remove spark plug(s) and spray a fogging agent into spark plug(s) threaded openings. Install and tighten spark plug(s) to specification.
10. Remove battery and store in a cool, dry place.
11. Clean and wipe down generator enclosure.

Return to Service

⚠WARNING

Explosion. Batteries emit explosive gases. Always connect positive battery cable first to avoid spark. Failure to do so could result in death or serious injury. (000133)

⚠CAUTION

Equipment damage. Do not make battery connections in reverse. Doing so will result in equipment damage. (000167a)

Proceed as follows to return unit to service after storage:

1. Check tag on engine for oil viscosity and classification. Drain and fill with correct oil if necessary.
2. Verify state of battery. Fill all cells of unsealed batteries to correct level with distilled water. **DO NOT** use tap water. Charge battery to 100% state of charge. Replace battery if faulty.
3. Clean and wipe down generator enclosure.
4. Verify 7.5A fuse is removed from generator control panel.
5. Connect battery. Observe battery polarity. Damage will occur if battery is connected incorrectly. Install positive battery cable first.
6. Connect battery charger AC input T1/Neutral cable (with white sleeve) at controller.
7. Open fuel shutoff valve.
8. Insert 7.5 A fuse into generator control panel.
9. Complete Install Wizard procedure (diagrammed in generator installation manual).
10. Press MANUAL button to start unit. Allow unit to warm up for a few minutes.
11. Press control panel OFF button to stop unit.
12. Set generator MLCB (generator disconnect) to ON (CLOSED).
13. Press AUTO button on control panel.

The generator is ready for service.

NOTE: Exercise timer and current date and time must be reset if a battery has been completely discharged or disconnected.

This page intentionally left blank.

Section 5: Troubleshooting / Quick Reference Guide

Generator Troubleshooting

Problem	Cause	Correction
Engine will not crank	Blown fuse.	Correct short circuit condition by replacing 7.5 A fuse in generator control panel. Contact an IASD if fuse continues to blow.
	Loose, corroded, or faulty battery cables.	Tighten, clean, or replace as necessary.*
	Faulty starter contact.	
	Faulty starter motor.	
	Discharged battery.	Charge or replace battery.
Engine cranks but will not start	No fuel.	Replenish fuel / turn on fuel valve.
	Faulty fuel solenoid (FS).	Contact an IASD for assistance.
	Open Wire 14 from controller.	
	Faulty spark plug(s).	Clean; inspect gap; replace plug(s) if necessary.
	Valve clearance out of adjustment, if applicable. See ***Engine***.	Inspect and adjust valve clearance.
Engine starts hard and runs rough	Air cleaner plugged or damaged.	Inspect and clean air cleaner.
	Faulty spark plug(s).	Clean; inspect gap; replace plug(s) as needed.
	Incorrect fuel pressure.	Verify fuel pressure to regulator is 10–12 in water column (2.49–2.99 kPa) for LP gas, and 3.5–7.0 in water column (0.87–1.74 kPa) for NG.
	Fuel selector in wrong position.	Set fuel conversion valve to correct position.
	Valve clearance out of adjustment, if applicable. See ***Engine***.	Inspect and adjust valve clearance.
	Internal engine issue.	Contact an IASD for assistance.
Unit is set to OFF, but engine continues to run	Controller wired incorrectly.	Contact an IASD for assistance.
	Faulty control board.	
No AC output from generator	Main line circuit breaker (MLCB) (generator disconnect) is OFF (OPEN).	Reset MLCB (generator disconnect) to ON (CLOSED).
	Generator internal failure.	Contact an IASD for assistance.
	Engine may be warming up. See ***Cold Smart Start***.	Check the controller screen to verify status.

Problem	Cause	Correction
No transfer to standby after utility source failure	MLCB (generator disconnect) is OFF (OPEN).	Reset MLCB (generator disconnect) to ON (CLOSED).
	Faulty transfer switch coil.	Contact an IASD for assistance.
	Faulty transfer relay.	
	Transfer relay circuit open.	
	Faulty control logic board.	
	Engine may be warming up. See ***Cold Smart Start***.	Check controller screen to verify status.
Unit consumes large amounts of oil	Excessive engine oil.	Adjust oil to correct level.
	Faulty engine breather.	Contact an IASD for assistance.
	Incorrect type or viscosity of oil.	See ***Engine Oil Requirements***.
	Damaged gasket, seal, or hose.	Inspect for oil leaks.
	Restricted air filter.	Replace air filter.
Wi-Fi network connection broken or intermittent	Various.	See Wi-Fi module owner's manual.
* Contact an IASD for assistance.		

Quick Reference Guide

To clear an active alarm, press OFF button on the control panel, then the ENTER button, and finally the AUTO button. Contact an IASD if alarm reoccurs.

Active Alarm	LED	Problem	Action	Solution
NONE	FLASHING GREEN	Unit running in AUTO but no power in house.	Check MLCB (generator disconnect).	Check MLCB (generator disconnect). If it is ON, contact an IASD.
HIGH TEMPERATURE	RED	Unit shuts down during operation.	Check LEDs / screen for alarms.	Inspect ventilation around generator, intake, exhaust, and rear of generator. If no obstructions are present, contact an IASD.
OVERLOAD REMOVE LOAD	RED	Unit shuts down during operation.	Check LEDs / screen for alarms.	Clear alarm and remove household loads from generator. Put in AUTO and restart.
RPM SENSE LOSS	RED	Unit was running and shut down, attempts to restart.	Check LEDs / screen for alarms.	Clear alarm and remove household loads from generator. Put into AUTO and restart. If generator does not start, contact an IASD.
NOT ACTIVATED	NONE	Unit will not start in AUTO with utility loss.	Check if screen says unit not activated.	See Activation in installation manual.
NONE	GREEN	Unit will not start in AUTO with utility loss.	Check screen for start delay countdown.	If startup delay is greater than expected, contact an IASD to adjust from 2 to 1500 seconds.
LOW OIL PRESSURE	RED	Unit will not start in AUTO with utility loss.	Check LEDs / screen for alarms.	Check oil level and add oil as needed. If oil level is correct, contact an IASD.
RPM SENSE LOSS	RED	Unit will not start in AUTO with utility loss.	Check LEDs / screen for alarms.	Clear alarm. Using control panel, check battery by navigating to BATTERY MENU option from MAIN MENU. If battery condition displays GOOD, contact an IASD. If control panel displays CHECK BATTERY, replace battery.
OVERCRANK	RED	Unit will not start in AUTO with utility loss.	Check LEDs / screen for alarms.	Verify fuel line shutoff valve is ON. Clear alarm. Start unit in MANUAL. If it does not start, or starts and runs rough, contact an IASD.
LOW VOLTS REMOVE LOAD	RED	Unit will not start in AUTO with utility loss.	Check LEDs / screen for alarms.	Clear alarm and remove household loads from the generator. Put in AUTO and restart.
OVERSPEED	RED	Unit will not start in AUTO with utility loss.	Check LEDs / screen for alarms.	Contact an IASD.
UNDERVOLTAGE	RED	Unit will not start in AUTO with utility loss.	Check LEDs / screen for alarms.	Contact an IASD.
UNDERSPEED	RED	Unit will not start in AUTO with utility loss.	Check LEDs / screen for alarms.	Contact an IASD.
STEPPER OVERCURRENT	RED	Unit will not start in AUTO with utility loss.	Check LEDs / screen for alarms.	Contact an IASD.
WIRING ERROR	RED	Unit will not start in AUTO with utility loss.	Check LEDs / screen for alarms.	Contact an IASD.
OVERVOLTAGE	RED	Unit will not start in AUTO with utility loss.	Check LEDs / screen for alarms.	Contact an IASD.

Active Alarm	LED	Problem	Action	Solution
AUXILIARY SHUTDOWN	RED	Unit will not start.	Check auxiliary shutdown switches	Set auxiliary shutdown switch(es) to CLOSED (I). Clear alarm.
LOW BATTERY	YELLOW	Yellow LED illuminated in any state.	Check screen for additional information.	Clear alarm. Using control panel, check battery by navigating to BATTERY MENU option from MAIN MENU. If battery condition displays GOOD, contact an IASD. If control panel displays CHECK BATTERY, replace battery.
BATTERY PROBLEM	YELLOW	Yellow LED illuminated in any state.	Check screen for additional information.	Contact an IASD.
CHARGER WARNING	YELLOW	Yellow LED illuminated in any state.	Check screen for additional information.	Contact an IASD.
CHARGER MISSING AC	YELLOW	Yellow LED illuminated in any state.	Check screen for additional information.	Contact an IASD.
SERVICE A	YELLOW	Yellow LED illuminated in any state.	Check screen for additional information.	Perform SERVICE A maintenance. Press ENTER to clear.
SERVICE B	YELLOW	Yellow LED illuminated in any state.	Check screen for additional information.	Perform SERVICE B maintenance. Press ENTER to clear.
INSPECT BATTERY	YELLOW	Yellow LED illuminated in any state.	Check screen for additional information.	Inspect battery. Press ENTER to clear.

Part No. 10000024942 Rev. B 10/02/19
©2019 Generac Power Systems, Inc.
All rights reserved.
Specifications are subject to change without notice.
No reproduction allowed in any form without prior written consent from Generac Power Systems, Inc.

Generac Power Systems, Inc.
S45 W29290 Hwy. 59
Waukesha, WI 53189
1-888-GENERAC (1-888-436-3722)
www.generac.com