XC4000W Power Washer

Parts Manual

Model G0088720

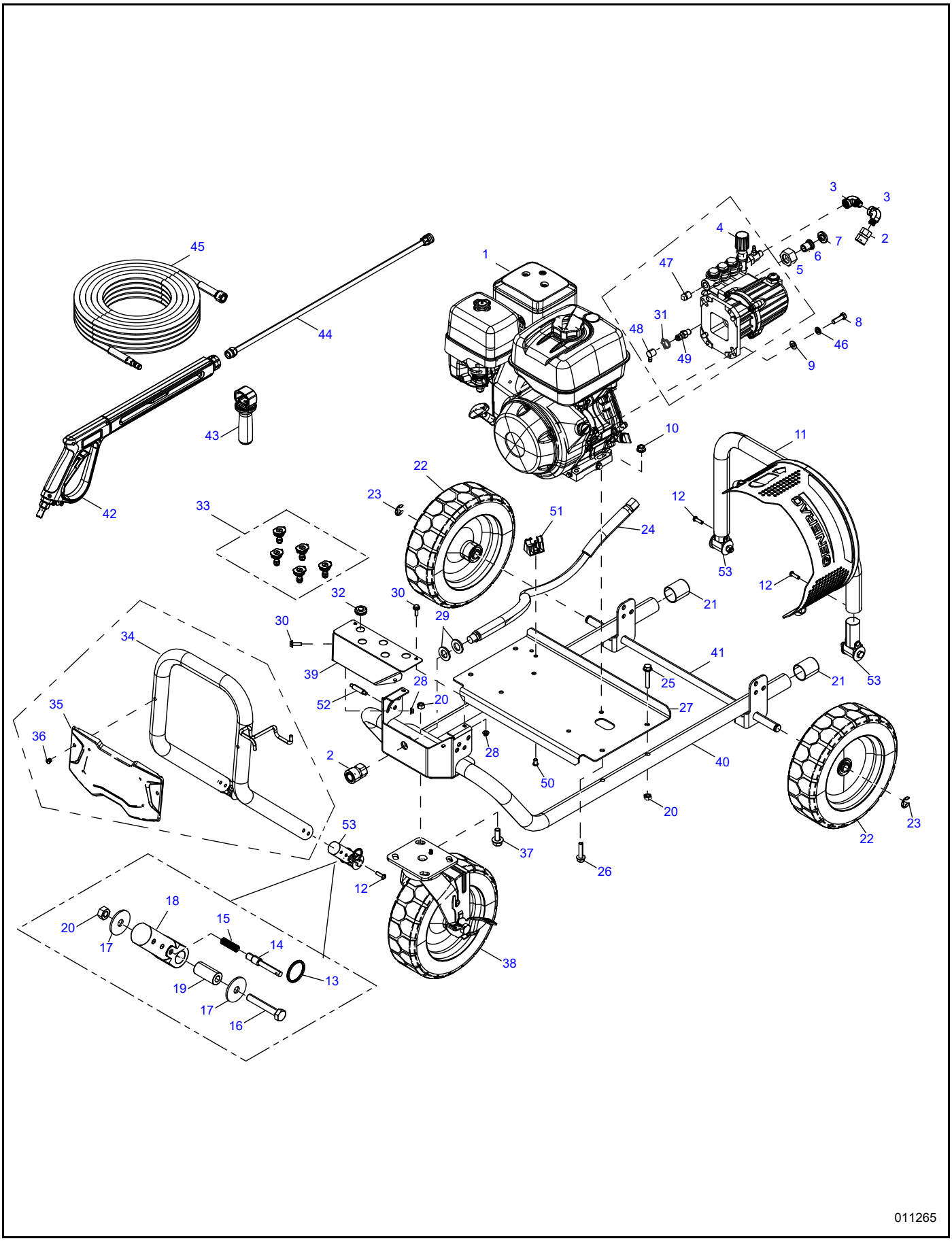
⚠WARNING

CANCER AND REPRODUCTIVE HARM
www.P65Warnings.ca.gov.

(000393a)

The information in this manual is known to be accurate as of the date of release shown on the cover. However, engineering changes can occur without notice. To obtain the proper parts, be sure to use the serial number of the unit being serviced when ordering from this manual. Always refer to any part notes and changes before ordering. All other parts not shown in the manual can be found on Generac's exploded view drawings at ***www.generac.com*** or by contacting your local authorized dealer.

www.generac.com or 1-888-GENERAC


3
3
2
4
7
6
5
47
45
1
44
31
48
49
8
46
9
43
10
11
22
23
51
24
12
53
33
12
32
30
29
21
30
34
39
28
20
52
41
25
21
53
35
36
27
2
28
40
50
20
53
37
26
22
23
12
18
20
17
15
14
13
19
17
16
38

011265

QUICK REFERENCE GUIDE		
Engine Size	**Fuel**	**Engine Part No.**
390CC	Gasoline	A0000390360
QUICK REFERENCE PARTS		
Description	**Part No.**	**Special Notes**
Air Filter Element		
Spark Plug	0H8096	

ITEM	PART NO.	DESCRIPTION	QTY
1	A0000390360	ENGINE 390CC	1
2	0H9568	COUPLING-FEMALE QDISK	2
3	A0000264040	FITTING 3/8” NPT 90°	2
4	A0000940150	ASSEMBLY, CAT PUMP	1
5	0J1445	NUT, GARDEN HOSE INLET	1
6	A0000264041	NIPPLE GARDEN HOSE INLET	1
7	0J1444	SCREEN, GARDEN HOSE INLET	1
8	150431	BOLT, HCS 3/8-16 X 1-¼ GR5	4
9	G022131	WASHER, FLAT 3/8-M10 ZINC	4
10	G067989	NUT HEX FL WHIZ M8-1.25	4
11	A0000312353	ASSEMBLY, BUCKET HOLDER	1
12	0J5086	SCREW, BHSC M6-1.0 X 20 ZP	8
13	ORDER #53	SPLIT RING (KEY RING)	2
14	ORDER #53	PIN, PULL	2
15	ORDER #53	SPRING, COMPRESSION	2
16	G051731	SCREW, HHC M8-1.25 X 50 C8.8	4
17	ORDER #53	WASHER, FLAT .344ID X1.25OD	8
18	ORDER #53	KNUCKLE	4
19	ORDER #53	BUSHING, HANDLE BEARING	4
20	G049820	NUT, HEX LOCK M8-1.25 NY INS	12

ITEM	PART NO.	DESCRIPTION	QTY
21	A0000350054	CAP, 1.25” PVC TUBE	2
22	10000003228	WHEEL, 10”	2
23	0J2686	RING, SNAP-5/8 TYPE E	2
24	A0000641209	HOSE, BRAIDED 3/8” X 39.5 W/QC	1
25	0H1779	SCREW, HHFC M8-1.25 X45	4
26	G073144	SCREW, HHFC M8-1.25 V 45 G8.8	4
27	A0000264045	PLATE, BASE	1
28	0E6423	NUT, HEX FL WHIZ M5-0.8	4
29	0A1646	WASHER, FLAT M16	2
30	A0000773477	SCREW, HHFC M5-0.8 X 16	4
31	0C7649	CLAMP, HOSE .38-.87	1
32	0J3079	GROMMET, NOZZLE	5
33	0H9617E	KIT, NOZZLE 045	1
34	A0000940812	ASSEMBLY, HANDLE WITH BILLBOARD	1
35	ORDER #34	BILLBOARD W/DECAL	1
36	ORDER #34	RIVET, POP .25 X 0.625 STL BLK	2
37	G059012	SCREW, HHFC M8-1.25 XX20 G8.8	4
38	A0000441173	10” SWIVEL CASTER W/WHEEL	1
39	A0000940877	ASSEMBLY, BRACKET COVER W/ DECAL 4000	1
40	A0000346455	ASSEMBLY, CRADLE WELDMENT	1
41	A0000264092	AXLE 5/8	1
42	0K6183	GUN, PROF W/QC	1

ITEM	PART NO.	DESCRIPTION	QTY
43	0J1052	HANDLE, GUN SUPPORT	1
44	0K9900A	LANCE ASSEMBLY, 29” SS	1
45	0K5465A	HOSE, 3/8” X 35’ W/QC	1
46	180811	WASHER, LOCK SPLIT 3/8 INCH	4
47	0D4788	PLUG, STD PIPE 3/8 STEEL SQ HD	1
48	A0000560770	CAP, THERMAL RELIEF VALVE	1
49	A0000560782	VALVE, THERMAL RELIEF	1
50	0G7717	SCREW, HH HI-LO M6.3 X 10MM	2
51	A0000635613	HOSE, STANDOFF	1
52	ORDER #53	PIN, STOP	1
53	A0000940863	ASSEMBLY, KNUCKLE	4
N/S	0J5710	DETERGENT HOSE AND FILTER	1

N/A = Not Available
N/S = Not Shown

NOTE: To order replacement pump parts, see manual A0000945455.

Part No. A0000877780 Rev. A 08/12/2020
©2020 Generac Power Systems, Inc.
All rights reserved
Specifications are subject to change without notice.
No reproduction allowed in any form without prior written consent from Generac Power Systems, Inc.

Generac Power Systems, Inc.
S45 W29290 Hwy. 59
Waukesha, WI 53189
1-888-GENERAC (1-888-436-3722)
www.generac.com/pro