GROUP E

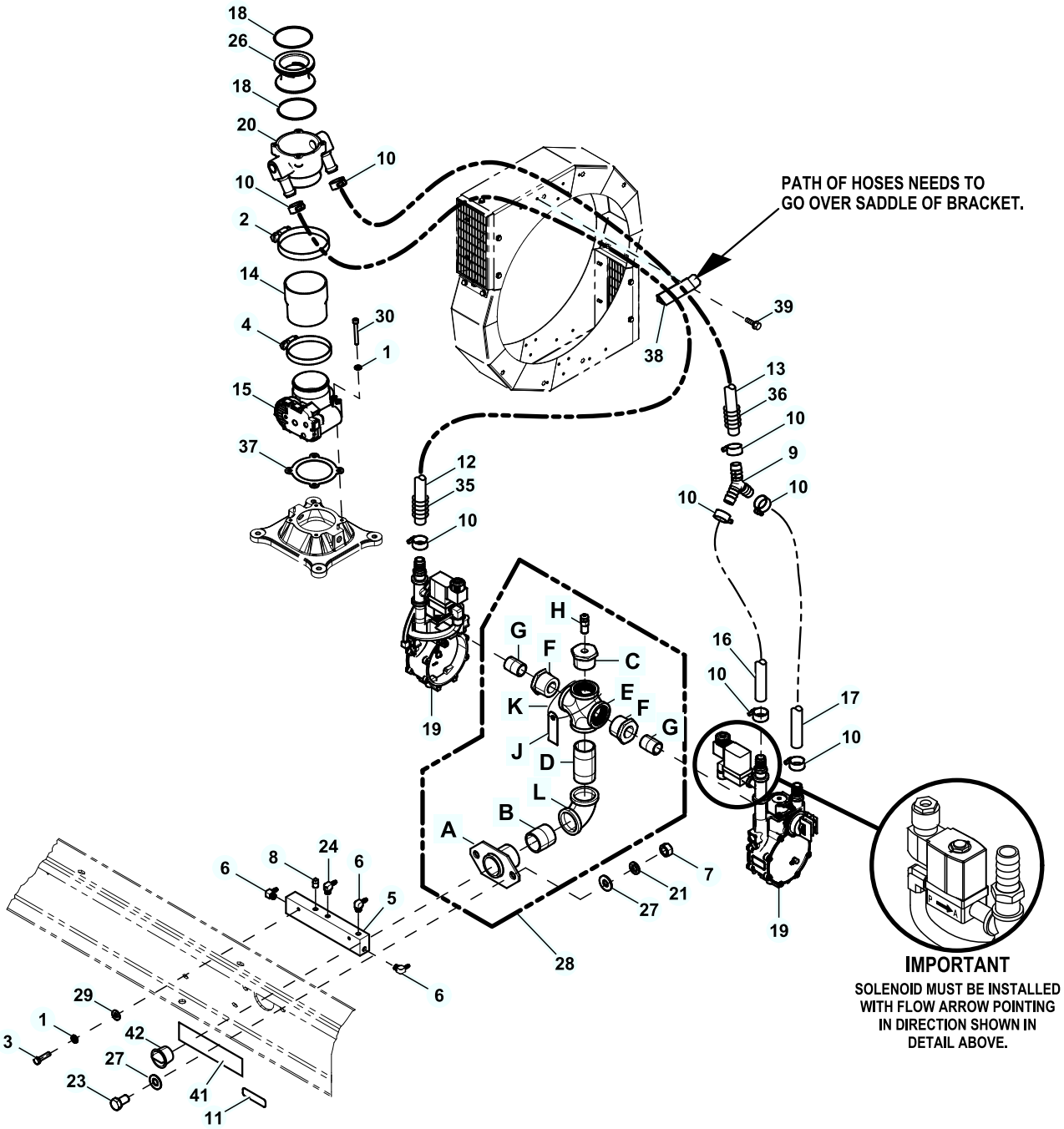
PATH OF HOSES NEEDS TO GO OVER SADDLE OF BRACKET.
IMPORTANT
SOLENOID MUST BE INSTALLED WITH FLOW ARROW POINTING IN DIRECTION SHOWN IN DETAIL ABOVE.

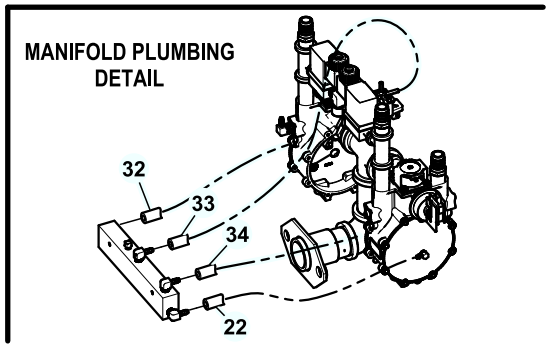
MANIFOLD PLUMBING DETAIL

EXPLODED VIEW: EV FUEL 9.0L NG 80/100KW EMS

DRAWING #:0J7680

GROUP E

ITEM	PART#	QTY.	DESCRIPTION
1	022097	6	WASHER LOCK M6-1/4
2	066212	1	CLAMP HOSE #52 2.81-3.75
3	042568	2	SCREW HHC M6-1.0 X 20 C8.8
4	039294	1	CLAMP HOSE #44 2.31-3.25
5	0G5652	1	MANIFOLD, EMISSIONS VACUUM
6	039450	3	ADPTR BARB 90D 3/16 X 1/8NPT
7	045773	2	NUT HEX M12-1.75 G8 YEL CHR
8	026073	1	PLUG STD PIPE 1/8 STEEL SQ HD
9	0F4408	1	Y CONNECTOR, 500 SERIES BARBS
10	057822	8	CLAMP HOSE #8 .53-1.00
11	0K0999	1	DECAL UL FUEL RATING CONFIG
12	059057	1	HOSE 3/4 ID SAE-30R2 (60“LG)
13	059057	1	HOSE 3/4 ID SAE-30R2 (55“LG)
14	0F0960	1	REDUCER 3.0" TO 2.75" TURBO
15	0E4392	1	ACTUATOR BOSCH 60, GOVERNOR
16	059057	1	HOSE 3/4 ID SAE-30R2 (9.5“LG)
17	059057	1	HOSE 3/4 ID-SAE30R2 (12“LG)
18	0G3167	2	O-RING 2-3/4 X 3/32 X 2-15/16
19	0G9782	1	REG 6.8L CPL&CONF 100KW NG EMS
20	0F3885	1	MIXER, 40/60MM ACTUATOR ASSY
21	022195	2	WASHER LOCK 1/2
22	077879	1	HOSE VACUUM 5/32 (14” LG)
23	052645	2	SCREW HHC M12-1.75 X 30 C8.8
24	0F1866A	1	BARBED EL W/VENT (.052")
25	085662	1	TIE WRAP UL 14.6 X .14 BLK (NOT SHOWN)
26	0F3691E	1	VENTURI, THROTTLE 42MM
27	022304	4	WASHER FLAT 1/2 ZINC
28	0F8313	1	ASSY RGLTR INLET NPT FITTINGS
A	065908	1	SUPPORT NAT GAS SOLENOID
B	039130	1	NIPPLE CLOSE 1.25NPT X 1.625
C	0E7162	1	BSHG RDCR HEX 1-1/4 X 1/4FNPT
D	031015	1	NIPPLE PIPE 1-1/4NPT X 3
E	0K2771	1	CROSS 1-1/4" NPT
F	0A8064	2	BSHG RDCR HEX 1-1/4-3/4
G	026915	2	NIPPLE CLOSE 3/4 X 1.375
H	0K2340	1	PLUG, PRESSURE GAUGE, 1/4" NPT
J	0K3795	1	HANG TAG FUEL PRESS TEST POINT
K	0H3632	1	TIE WRAP UL 5.6 X .10 BLACK
L	030131	1	ELBOW 90D 1-1/4NPT
29	022473	2	WASHER FLAT 1/4-M6 ZINC
30	0D2157	4	SCREW SHC M6-1.0 X 50 C8.8
31	0G5989	1	HARNESS FUEL JUMPER DUAL REG (NOT SHOWN)
32	077879	1	HOSE VACUUM 5/32 (8.5” LG)
33	077879	1	HOSE VACUUM 5/32 (14.5” LG)
34	077879	1	HOSE VACUUM 5/32 (9.5” LG)
35	077043E	2	CONDUIT FLEX 1.0"ID (58"LG)
36	077043E	2	CONDUIT FLEX 1.0"ID (53"LG)
37	0E4390	1	GASKET, GOVERNOR ACTUATOR
(1)38	0G46350ST0R	1	BRACKET, HOSE RISER
39	090388	2	SCREW HHTT M6-1.0 X 12 ZINC
40	085662	4	TIE WRAP UL 14.6 X .14 BLK (NOT SHOWN)
41	050279A	1	DECAL FUEL INLET NG 1 1/4" NPT
42	0L5885	1	PLUG PLASTIC 1.25" TAPERED CAP

NOTES (UNLESS OTHERWISE SPECIFIED):

(1) SHEET METAL PARTS LISTED IN THE BOM TABLE, PRIOR TO 1/1/16, ARE REPRESENTING GENERIC PARTS (NO COLOR) :

- MANUFACTURING: FOR CORRECT MATERIAL AND COLOR REFER TO SAP BOM.
- CUSTOMER: WHEN ORDERING REPLACEMENT PARTS ENTER BASE NUMBER (FIRST 6 DIGITS ONLY) IN THE SYSTEM FOR CORRECT MATERIAL AND COLOR (FOR REFERENCE SEE GUIDELINE 0H7169).