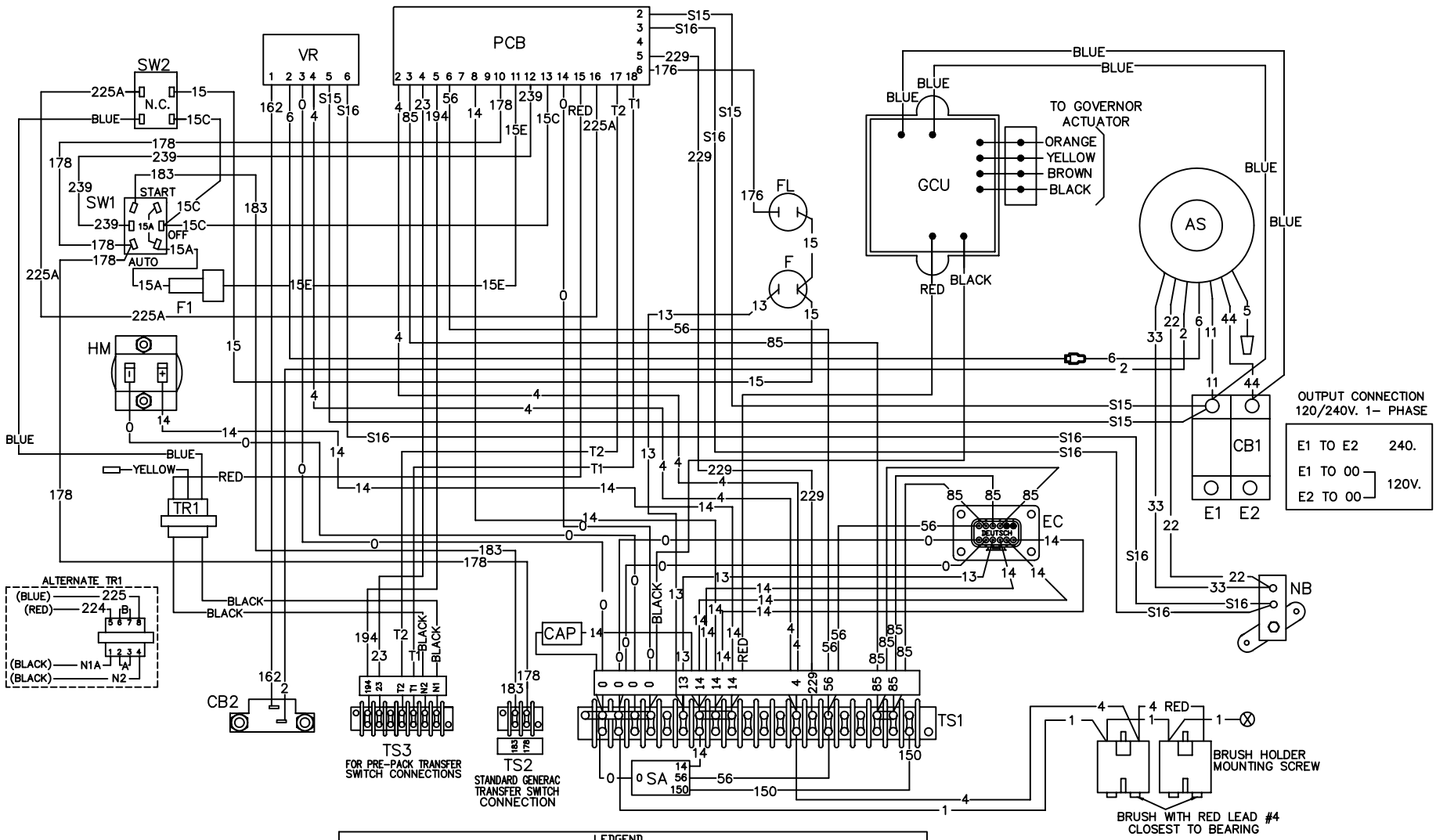

LEDGEND		
AS - ALTERNATOR STATOR	FL - FAULT LIGHT	SW2 - SET EXERCISE SWITCH
CAP - CAPACITOR	GCU- GOVERNOR CONTROLLER	TR1 -TRNSFRMR, UTILITY SENSING
CB1 - CIRCUIT BREAKER	HM - HOUR METER	TS1 - TERMINAL STRIP 20 POS.
CB2 - FIELD BREAKER	NB - NEUTRAL BLOCK	TS2 - TERMINAL STRIP 2 POS.
EC - ENGINE CONNECTION	PCB -PRE-PACK CIRCUIT BOARD	TS3 - TERMINAL STRIP 7 POS.
F - FUSE 15 AMPS	SA - SUPRESSION ASSEMBLY	VR - VOLTAGE REGULATOR
F1 - FUSE, INLINE 7.5 AMP	SW1 -AUTO/OFF/MANUAL SWITCH	