GENERAC®

POWER SYSTEMS, INC.

Owner's Manual

Liquid-cooled, Prepackaged
Standby Generators

Model No.: 005048-0 (15kW)
005048-1
005052-0 (20kW)
005052-1
005078-0 (25kW)
005078-1
004990-0
004990-1

This manual should remain with the unit.

CAUTION

ONLY QUALIFIED ELECTRICIANS OR CONTRACTORS SHOULD ATTEMPT INSTALLATION!!

INTRODUCTION

Thank you for purchasing this model of the standby generator set product line by Generac Power Systems.

Every effort was expended to make sure that the information and instructions in this manual are both accurate and current at the time the manual was written. However, the manufacturer reserves the right to change, alter or otherwise improve this product(s) at any time without prior notice.

◆ READ THIS MANUAL THOROUGHLY

If any portion of this manual is not understood, contact the nearest Generac Authorized Service Dealer for starting, operating and servicing procedures.

Throughout this publication, and on tags and decals affixed to the generator, DANGER, WARNING, CAUTION and NOTE blocks are used to alert personnel to special instructions about a particular service or operation that may be hazardous if performed incorrectly or carelessly. Observe them carefully. Their definitions are as follows:

DANGER

After this heading, read instructions that, if not strictly complied with, will result in personal injury or property damage.

WARNING

After this heading, read instructions that, if not strictly complied with, may result in personal injury or property damage.

CAUTION

After this heading, read instructions that, if not strictly complied with, could result in damage to equipment and/or property.

NOTE:

After this heading, read explanatory statements that require special emphasis.

These safety warnings cannot eliminate the hazards that they indicate. Common sense and strict compliance with the special instructions while performing the service are essential to preventing accidents.

Four commonly used safety symbols accompany the DANGER, WARNING and CAUTION blocks. The type of information each indicates is as follows:

This symbol points out important safety information that, if not followed, could endanger personal safety and/or property of others.

This symbol points out potential explosion hazard.

This symbol points out potential fire hazard.

This symbol points out potential electrical shock hazard.

The operator is responsible for proper and safe use of the equipment. Generac strongly recommends that the operator reads this Owner's Manual and thoroughly understands all instructions before using this equipment. Generac also strongly recommends instructing other users to properly start and operate the unit. This prepares them if they need to operate the equipment in an emergency.

◆ OPERATION AND MAINTENANCE

It is the operator's responsibility to perform all safety checks, to make sure that all maintenance for safe operation is performed promptly, and to have the equipment checked periodically by a Generac Authorized Service Dealer. Normal maintenance service and replacement of parts are the responsibility of the owner/operator and, as such, are not considered defects in materials or workmanship within the terms of the warranty. Individual operating habits and usage contribute to the need for maintenance service.

Proper maintenance and care of the generator ensures a minimum number of problems and keep operating expenses at a minimum. See a Generac Authorized Service Dealer for service aids and accessories.

Operating instructions presented in this manual assume that the standby electric system has been installed by a Generac Authorized Service Dealer or other competent, qualified contractor. Installation of this equipment is not a “do-it-yourself” project.

◆ HOW TO OBTAIN SERVICE

When the generator requires servicing or repairs, contact a Generac Authorized Service Dealer for assistance. Service technicians are factory-trained and are capable of handling all service needs.

When contacting a Generac Authorized Service Dealer about parts and service, always supply the complete model number of the unit as given on the front cover of this manual or on the DATA LABEL affixed to the unit.

AUTHORIZED SERVICE DEALER LOCATION

To locate the nearest GENERAC AUTHORIZED SERVICE DEALER, please call this number:

1-800-333-1322

OR

Locate us on the web at:

www.generac.com

INTRODUCTION ..... **IFC**
Read this Manual Thoroughly ..... IFC
Operation and Maintenance ..... IFC
How to Obtain Service ..... IFC
Authorized Service Dealer Location ..... IFC
SAFETY RULES **2**
Section 1 — GENERAL INFORMATION **4**
1.1 Generator 4
1.2 Transfer Switch 4
1.3 Automatic System Operation 4
1.4 Generator AC Connection Systems 4
1.5 Main Circuit Breaker 5
1.6 Generator Fuel System 5
1.7 Engine Protective Devices 5
1.8 Unpacking 6
1.9 Lifting the Generator 6
1.10 Specifications 6
1.11 Fuel Consumption 7
1.12 Reconfiguring the Fuel System for LP Vapor 7
1.13 Engine Oil Recommendations 8
1.14 Coolant Recommendations 8
1.15 Before Installation 8
Section 2 — INSTALLATION **8**
2.1 Standby Generator Installation 8
2.2 Generator Location 9
2.3 Generator Mounting and Support 9
2.4 Basic Standby Electric System 9
2.5 Emergency Circuit Isolation Method 9
2.6 Total Circuit Isolation Method 10
2.7 Grounding the Generator 10
2.8 Generator AC Neutral Connections 10
2.9 Using a Standard “GTS” Transfer Switch 10
2.10 Exhaust Manifold Installation 11
2.11 Intake Manifold Installation 11
2.12 Cylinder Head Installation 11
2.13 Battery Installation 11
2.14 Preparation Before Start-Up 12
Section 3 — OPERATION **13**
3.1 GTS Transfer Switch 13
3.2 Control Console Components 14
3.3 Manual Transfer and Startup 15
3.4 Engine Governor Adjustments 15
3.5 Manual Retransfer and Shutdown 16
3.6 Automatic Operation 16
3.7 Weekly Exercise Cycle 16
3.8 Control Board DIP Switch Settings 16
3.9 Voltage Regulator Adjustment 17
Section 4 — MAINTENANCE **18**
4.1 Maintenance Performed by Authorized Service Facilities 18
4.2 Cooling System 18
4.3 Overload Protection for Engine DC Electrical System 18
4.4 Checking Fluid Levels 18
4.5 Maintenance Owner/Operator Can Perform 19
4.6 Miscellaneous Maintenance 20
4.7 Scheduled Maintenance 22
Section 5 — TROUBLESHOOTING **25**
Section 6 — ELECTRICAL DATA **26**
Section 7 — EXPLODED VIEWS AND PARTS LISTS **36**
Section 8 — INSTALLATION DIAGRAM **55**
Section 9 — WARRANTY **56**

SAVE THESE INSTRUCTIONS – The manufacturer suggests that these rules for safe operation be copied and posted in potential hazard areas. Safety should be stressed to all operators, potential operators, and service and repair technicians for this equipment.

SAVE THESE INSTRUCTIONS – This manual contains important instructions that should be followed during installation and maintenance of the generator and batteries.

WARNING:

The engine exhaust from this product contains chemicals known to the state of California to cause cancer, birth defects or other reproductive harm.

WARNING:

This product contains or emits chemicals known to the state of California to cause cancer, birth defects or other reproductive harm.

Study these SAFETY RULES carefully before installing, operating or servicing this equipment. Become familiar with this *Owner's Manual* and with the unit. The generator can operate safely, efficiently and reliably only if it is properly installed, operated and maintained. Many accidents are caused by failing to follow simple and fundamental rules or precautions.

Generac cannot anticipate every possible circumstance that might involve a hazard. The warnings in this manual, and on tags and decals affixed to the unit are, therefore, not all-inclusive. If using a procedure, work method or operating technique that Generac does not specifically recommend, ensure that it is safe for others. Also make sure the procedure, work method or operating technique utilized does not render the generator unsafe.

DANGER

Despite the safe design of this generator, operating this equipment imprudently, neglecting its maintenance or being careless can cause possible injury or death. Permit only responsible and capable persons to install, operate or maintain this equipment.

Potentially lethal voltages are generated by these machines. Ensure all steps are taken to render the machine safe before attempting to work on the generator.

Parts of the generator are rotating and/or hot during operation. Exercise care near running generators.

GENERAL HAZARDS

- For safety reasons, Generac recommends that this equipment be installed, serviced and repaired by a Generac Authorized Service Dealer or other competent, qualified electrician or installation technician who is familiar with applicable codes, standards and regulations. The operator also must comply with all such codes, standards and regulations.
- Installation, operation, servicing and repair of this (and related) equipment must always comply with applicable codes, standards, laws and regulations. Adhere strictly to local, state and national electrical and building codes. Comply with regulations the Occupational Safety and Health Administration (OSHA) has established. Also, ensure that the generator is installed, operated and serviced in accordance with the manufacturer's instructions and recommendations. Following installation, do nothing that might render the unit unsafe or in noncompliance with the aforementioned codes, standards, laws and regulations.
- The engine exhaust fumes contain carbon monoxide gas, which can be DEADLY. This dangerous gas, if breathed in sufficient concentrations, can cause unconsciousness or even death. For that reason, adequate ventilation must be provided. Exhaust gases must be piped safely away from any building or enclosure that houses the generator to an area where people, animals, etc., will not be harmed. This exhaust system must be installed properly, in strict compliance with applicable codes and standards.
- Keep hands, feet, clothing, etc., away from drive belts, fans, and other moving or hot parts. Never remove any drive belt or fan guard while the unit is operating.
- Adequate, unobstructed flow of cooling and ventilating air is critical to prevent buildup of explosive gases and to ensure correct generator operation. Do not alter the installation or permit even partial blockage of ventilation provisions, as this can seriously affect safe operation of the generator.
- Keep the area around the generator clean and uncluttered. Remove any materials that could become hazardous.
- When working on this equipment, remain alert at all times. Never work on the equipment when physically or mentally fatigued.

- Inspect the generator regularly, and promptly repair or replace all worn, damaged or defective parts using only factory-approved parts.
- Before performing any maintenance on the generator, disconnect its battery cables to prevent accidental start-up. Disconnect the cable from the battery post indicated by a NEGATIVE, NEG or (–) first. Reconnect that cable last.
- Never use the generator or any of its parts as a step. Stepping on the unit can stress and break parts, and may result in dangerous operating conditions from leaking exhaust gases, fuel leakage, oil leakage, etc.

ELECTRICAL HAZARDS

- All generators covered by this manual produce dangerous electrical voltages and can cause fatal electrical shock. Utility power delivers extremely high and dangerous voltages to the transfer switch as well as the standby generator. Avoid contact with bare wires, terminals, connections, etc., on the generator as well as the transfer switch, if applicable. Ensure all appropriate covers, guards and barriers are in place before operating the generator. If work must be done around an operating unit, stand on an insulated, dry surface to reduce shock hazard.
- Do not handle any kind of electrical device while standing in water, while barefoot, or while hands or feet are wet. **DANGEROUS ELECTRICAL SHOCK MAY RESULT.**
- If personnel must stand on metal or concrete while installing, operating, servicing, adjusting or repairing this equipment, place insulative mats over a dry wooden platform. Work on the equipment only while standing on such insulative mats.
- The National Electrical Code (NEC), Article 250 requires the frame and external electrically conductive parts of the generator to be connected to an approved earth ground and/or grounding rods. This grounding will help prevent dangerous electrical shock that might be caused by a ground fault condition in the generator set or by static electricity. Never disconnect the ground wire.
- Wire gauge sizes of electrical wiring, cables and cord sets must be adequate to handle the maximum electrical current (ampacity) to which they will be subjected.
- Before installing or servicing this (and related) equipment, make sure that all power voltage supplies are positively turned off at their source. Failure to do so will result in hazardous and possibly fatal electrical shock.
- Connecting this unit to an electrical system normally supplied by an electric utility shall be by means of a transfer switch so as to isolate the generator electric system from the electric utility distribution system when the generator is operating. Failure to isolate the two electric system power sources from each other by such means will result in damage to the generator and may also result in injury or death to utility power workers due to backfeed of electrical energy.
- Generators installed with an automatic transfer switch will crank and start automatically when NORMAL (UTILITY) source voltage is removed or is below an acceptable preset level. To prevent such automatic start-up and possible injury to personnel, disable the generator's automatic start circuit (battery cables, etc.) before working on or around the unit. Then, place a "Do Not Operate" tag on the generator control panel and on the transfer switch.
- In case of accident caused by electric shock, immediately shut down the source of electrical power. If this is not possible, attempt to free the victim from the live conductor. **AVOID DIRECT CONTACT WITH THE VICTIM.** Use a nonconducting implement, such as a dry rope or board, to free the victim from the live conductor. If the victim is unconscious, apply first aid and get immediate medical help.
- Never wear jewelry when working on this equipment. Jewelry can conduct electricity resulting in electric shock, or may get caught in moving components causing injury.

FIRE HAZARDS

- Keep a fire extinguisher near the generator at all times. Do NOT use any carbon tetra-chloride type extinguisher. Its fumes are toxic, and the liquid can deteriorate wiring insulation. Keep the extinguisher properly charged and be familiar with its use. If there are any questions pertaining to fire extinguishers, consult the local fire department.

EXPLOSION HAZARDS

- Properly ventilate any room or building housing the generator to prevent build-up of explosive gas.
- Do not smoke around the generator. Wipe up any fuel or oil spills immediately. Ensure that no combustible materials are left in the generator compartment, or on or near the generator, as FIRE or EXPLOSION may result. Keep the area surrounding the generator clean and free from debris.
- Generac generator sets may operate using one of several types of fuels. All fuel types are potentially FLAMMABLE and/or EXPLOSIVE and should be handled with care. Comply with all laws regulating the storage and handling of fuels. Inspect the unit's fuel system frequently and correct any leaks immediately. Fuel supply lines must be properly installed, purged and leak tested according to applicable fuel-gas codes before placing this equipment into service.
- Diesel fuels are highly FLAMMABLE. Gaseous fluids such as natural gas and liquid propane (LP) gas are extremely EXPLOSIVE. Natural gas is lighter than air, and LP gas is heavier than air; install leak detectors accordingly.

1.1 GENERATOR

This equipment is a liquid-cooled, engine-driven generator set. The generator is designed to supply electrical power that operates critical electrical loads during utility power failure. The unit has been factory-installed in a weather resistant, all metal enclosure and is intended for outdoor installation only. Use this generator as a source of electrical power for the operation of 120 and/or 240VAC, single-phase loads.

These models are available. They are rated as follows:

Model 004990-0 and 005078-0: Provides 25,000 watts (25 kW) of single-phase power.

Model 005052-0: Provides 20,000 watts (20 kW) of single-phase power.

Model 005048-0: Provides 15,000 watts (15 kW) of single-phase power.

WARNING

If this generator is used to power electrical load circuits normally powered by a utility power source, it is required by code to install a transfer switch. The transfer switch must effectively isolate the electric system from the utility distribution system when the generator is operating (NEC 701). Failure to isolate an electrical system by such means results in damage to the generator and may also result in injury or even death to utility power workers due to backfeed of electrical energy.

1.2 TRANSFER SWITCH

This generator system may include a matched automatic transfer switch which is intended to be used in conjunction with the Generac generator. It is supplied in either a NEMA 1 enclosure or a NEMA 3R enclosure. The NEMA 1 enclosure is intended for indoor use only. The NEMA 3R enclosure is weather proof and can be used indoors or outdoors. Follow these rules:

- Install the transfer switch on a firm, sturdy supporting structure.
- To prevent switch distortion, level the switch if necessary. This can be done by placing washers between the switch enclosure and the mounting surface.
- Never install the switch where water or any corrosive substance might drip onto the enclosure.
- Protect the switch at all times against excessive moisture, dust, dirt, lint, construction grit and corrosive vapors.

If a transfer switch is not included, one may be purchased separately from a Generac Authorized Dealer.

1.3 ATS MODE AUTOMATIC OPERATION

When this generator, along with its transfer switch, has been installed and interconnected, a circuit board in the generator control panel constantly monitors utility power source voltage. Should that voltage drop below a preset value, and remain at such a low state for a preset amount of time, the generator cranks and starts. After the generator starts, the transfer switch transfers load circuits so the generator can power them.

When utility source voltage has been restored, the switch re-transfers back to the utility source voltage and the generator then shuts down.

Please reference the transfer switch manual for specific information.

1.4 GENERATOR AC CONNECTION SYSTEMS

The generator was shipped from the factory with its stator AC output leads connected in a single-phase, 3-wire generator AC connection system (Figure 1.1). The stator assembly in this system consists of a pair of stationary windings, with two leads brought out of each winding. Each single winding can supply 120 VAC, 60 Hertz. When the two windings are connected in series, a 240 VAC, 60 Hertz AC output results. Typically the two “hot” leads in the circuit are Wires No. 11 and 44. The “Neutral” leads are the junction of Wires 22 and 33.

Figure 1.1 - Generator AC Connection System

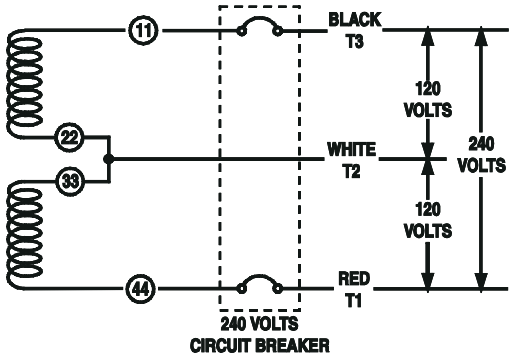

Figure 1.2 - Main Circuit Breaker

Model	Rating	Phase	Actual Current	C/B Rating*	% over rating	Circuit Breaker
004990-0, 005078-0	25,000 W	1	104.2 A	125 A	120%	125A BQ2
005052-0	20,000 W	1	83.3 A	100 A	120%	100A BQ2
005048-0	15,000 W	1	62.5	70 A	112%	70A BQ2

*** Amp Rating of C/B structured under model.**

1.5 MAIN CIRCUIT BREAKER

The generator's main circuit breaker is included with the unit as shipped from the factory. The breaker for each unit is described in Figure 1.2.

1.6 GENERATOR FUEL SYSTEM

This unit has been factory tested and adjusted using a natural gas fuel system. If propane (LP) gas is preferred, contact an authorized service dealer.

Fuel pressure for a natural gas set up should be **five inches to 14 inches of water column (0.18 to 0.5 psi)** at all load ranges.

Fuel pressure for an LP vapor set up should be **11 inches to 14 inches of water column (0.4 to 0.5 psi)** at all load ranges.

NOTE:

A seperate gas line and regulator may be needed to assure proper gas pressure to the generator. Improper gas pressure can cause hard starting and affect engine durability.

WARNING

Gaseous fuels such as natural and LP (propane) gas are highly explosive. Even the slightest spark can ignite such fuels and cause an explosion. No leakage of fuel is permitted. Natural gas, which is lighter than air, tends to collect in high areas. LP gas is heavier than air and tends to settle in low areas.

1.7 ENGINE PROTECTIVE DEVICES

The engine has several safety switches which cause the engine to automatically shut down under the following conditions: low oil pressure, high coolant temperature, engine overspeed, low coolant level or overcrank (Figure 1.3).

Figure 1.3 - Engine Protective Devices

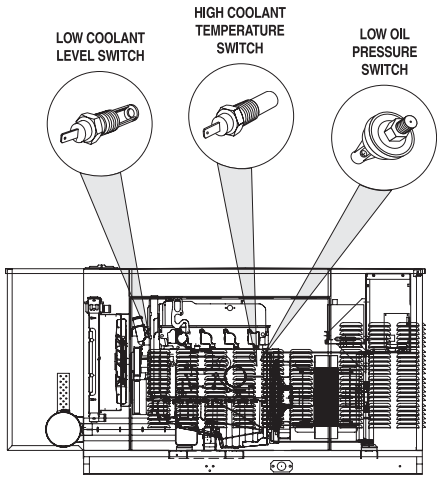

◆ 1.7.1 LOW OIL PRESSURE SWITCH

This switch is normally-closed (N.C.) but is held open by engine oil pressure during engine running. Should operating oil pressure drop below about 8-10 psi (55-68 kPa), the switch contacts close and the engine shuts down automatically (Figure 1.4).

Figure 1.4 - Low Oil Pressure Switch

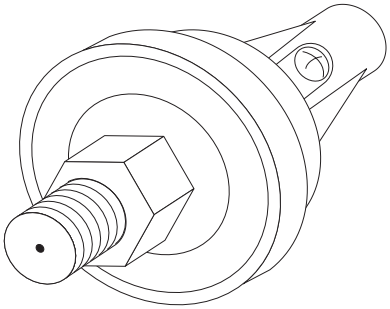

◆ 1.7.2 HIGH COOLANT TEMPERATURE SWITCH

Normally open (N.O.) thermostatic switch has sensing tip which is immersed in captive coolant. Should coolant temperature exceed about 230°F (110°C), the switch contacts close, which causes the engine to shut down automatically (Figure 1.5).

Figure 1.5- High Coolant Temperature Switch

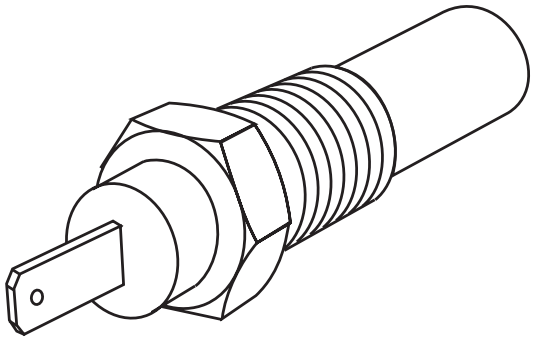

◆ 1.7.3 LOW COOLANT LEVEL SWITCH

Should engine coolant level drop below the level of the high coolant temperature switch, it is possible for the engine to overheat without automatic shutdown. To prevent such overheating without automatic shut down, the engine has a low coolant level sensor. If the engine coolant drops too low, the engine automatically shuts down (Figure 1.6).

Figure 1.6 - Low Coolant Level Sensor

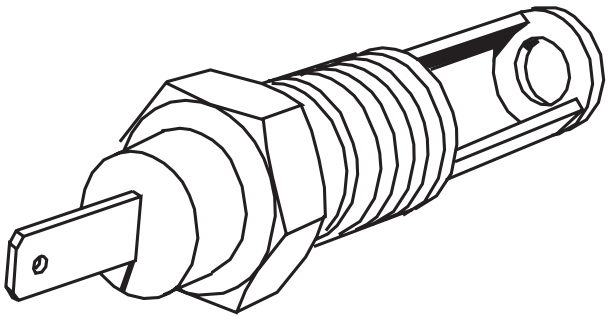

◆ 1.7.4 OVERSPEED SHUTDOWN

Should AC frequency exceed about 72 Hz, circuit board action will automatically shutdown the engine.

◆ 1.7.5 OVERCRANK SHUTDOWN

The engine control board uses a cyclic cranking process when attempting to start the engine. The first crank cycle is a 15-second crank followed by a seven-second rest. This is followed by five more crank cycles each with a seven second crank followed by a seven-second rest.

If the engine fails to start after all six attempts, the start attempt is stopped and the overcrank LED turns on.

◆ 1.7.6 LOW BATTERY

The engine control board continually monitors the battery voltage and turns on the low battery LED if the battery voltage falls below 12 VDC for one minute. Low battery voltage is a non-latching alarm, which will automatically clear if the battery voltage rises above 12 VDC. If the battery voltage drops below 6 VDC during cranking, the low battery voltage alarm is latched, cranking is terminated, and the low battery LED stays ON.

◆ 1.7.7 15A DC FUSE

This fuse is located inside the control panel. It protects the panel wiring and components from damaging overload. The unit will not start or crank if the fuse is blown. Replace the fuse with one of the same size, type, and rating.

1.8 UNPACKING

◆ 1.8.1 UNPACKING PRECAUTIONS

Handle shipping cartons and crates with care. Use care to avoid damage from dropping, bumping, collision, etc. Store and unpack cartons with the proper side up, as noted on the shipping carton.

◆ 1.8.2 INSPECTION

After unpacking, carefully inspect the generator for any damage that may have occurred during shipment. If loss or damage is noted at the time of delivery, have the person(s) making delivery note all damage on the freight bill or affix their signature under the consignor's memo of loss or damage.

1.9 LIFTING THE GENERATOR

⚠ WARNING ⚠

When lifting or hoisting equipment is used, be careful not to touch overhead power lines. The generators weight of more than 900 pounds requires proper tools, equipment, and qualified personnel to be used in all phases of handling and unpacking.

1.10 SPECIFICATIONS

◆ 1.10.1 ENGINE

Make	Ford
Displacement	153 inches^3 (2.5 liters)
Cylinder Arrangement	4, in-line
Valve Arrangement	Overhead Cam
Firing Order	1-3-4-2
Number of Main Bearings	5
Compression Ratio	9.37 to 1
No. of Teeth on Crank	36-1
Ignition Timing (Waste Spark System)	
at 1800 rpm (NG)	36 degrees BTDC
at 1800 rpm (LP Vapor)	28 degrees BTDC
Spark Plug Gap	0.044 inch
Recommended Spark Plugs	
Motorcraft	AWSF-52-C
Oil Pressure	30-50 psi
Crankcase Oil Capacity	4.5 U.S. quarts (4.26 liters)
Recommended Engine Oil	SAE 15W-40
Type of Cooling System	Pressurized, closed recovery
Cooling Fan	Pusher Type
Cooling System Capacity	2 U.S. gallons (7.6 liters)
Recommended Coolant	Use a 50-50 mixture of ethylene glycol base and deionized water.

⚠ WARNING ⚠

Home standby control board assembly part number 0E9704 must be used on 1800 rpm generators.

◆ 1.10.2 GENERATOR

	Single-phase	Single-phase	Single-phase
Model	004990-0, 005078-0	005052-0	005048-0
Rated Max. Continuous AC Power Output (kW)*	25	20	15
Rated voltage (volts)	120/240	120/240	120/240
Number of Rotor Poles	4	4	4
Driven Speed of Rotor	1800 rpm	1800 rpm	1800 rpm
Rotor Excitation System	Direct excited brush type	Direct excited brush type	Direct excited brush type
Type of Stator	4 Wire	4 Wire	4 Wire
Rotor Insulation	Class F	Class F	Class F
Stator Insulation	Class H	Class H	Class H

*** Rated power of generator is subject to and limited by such factors as ambient temperature, altitude, engine condition, and other factors. Engine power will decrease about 3.5% for each 1000 feet above sea level and will decrease an additional 1% for each 10°F above 60°F. Maximum output power of the generator is limited by maximum engine power.**

1.11 FUEL CONSUMPTION

25 kW Models

Using Natural Gas .....441 cu. ft. per hour

Using LP Gas.....175 cubic ft.(4.8 gal.) per hour

Fuel pressure for a natural gas set up should be **five inches to 14 inches of water column (0.18 to 0.5 psi)** at all load ranges.

Fuel pressure for an LP vapor set up should be **11 inches to 14 inches of water column (0.4 to 0.5 psi)** at all load ranges.

NOTE:

Fuel consumption is given at rated maximum continuous power output when using natural gas rated at 1000 Btu per cubic foot; or LP gas rated 2520 Btu per cubic foot. Actual fuel consumption obtained may vary depending on such variables as applied load, ambient temperature, engine conditions and other environmental factors.

1.12 RECONFIGURING THE FUEL SYSTEM FOR LP VAPOR

NOTE:

All models are configured for natural gas (NG) from the factory.

To reconfigure the fuel system from NG to LP vapor, follow these steps:

1. Turn the main gas supply off.
2. Remove the carburetor fuel hose from the outlet port (Port 1) of the demand regulator (Figure 1.8).
3. Remove the brass hose fitting from the outlet port (Port 1) of the demand regulator.
4. Remove pipe plug from Port 2.
5. Install brass hose fitting into Port 2.
6. Install pipe plug into Port 1.
7. Connect carburetor gas hose to brass fitting.
8. Tighten all clamps and plugs.
9. Make sure fuel supply is of the proper pressure and type for configuration (not to exceed 14 inches water column).
10. Move DIP switch position 4 on the control board to the off position (LP vapor, see Figure 3.2 and Section 3.8).
11. Reverse the procedure to convert back to natural gas.

Figure 1.8 — Reconfigure the Fuel System

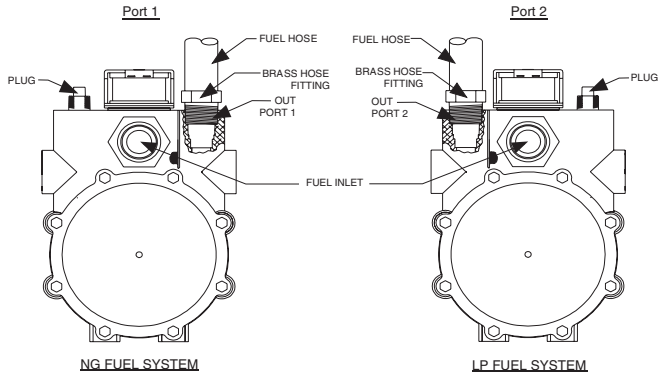

NOTE:

Port 1 is for NG only and Port 2 is for LP vapor only. No provision for dual fuel has been made.

DANGER

Serious injury or damage may occur if not configured properly. Please consult an authorized Generac Service Dealer with any questions.

1.13 ENGINE OIL RECOMMENDATIONS

The unit has been filled with 15W-40 engine oil at the factory. Use a high-quality detergent oil classified "For Service CC, SD, SE, SF." Detergent oils keep the engine cleaner and reduce carbon deposits. Use oil having the following SAE viscosity rating, based on the ambient temperature range anticipated before the next oil change:

Temperature	Oil Grade (Recommended)
Above 80° F (27° C)	SAE 30W or 15W-40
32° to 80° F (-1° to 27° C)	SAE 20W-20 or 15W-40
Below 32° F (0° C)	SAE 10W or 15W-40

CAUTION

Any attempt to crank or start the engine before it has been properly serviced with the recommended oil may result in an engine failure.

1.14 COOLANT RECOMMENDATIONS

Use a mixture of half low silicate ethylene glycol base anti-freeze and half deionized water. Cooling system capacity is about 8 U.S. quarts (7.6 liters). Use only deionized water and only low silicate anti-freeze. If desired, add a high quality rust inhibitor to the recommended coolant mixture. When adding coolant, always add the recommended 50-50 mixture.

CAUTION

Do not use any chromate base rust inhibitor with ethylene glycol base anti-freeze or chromiumhydroxide ("green slime") forms and will cause overheating. Engines that have been operated with a chromate base rust inhibitor must be chemically cleaned before adding ethylene glycol base anti-freeze. Using any high silicate anti-freeze boosters or additives will also cause overheating. DO NOT use any soluble oil inhibitor for this equipment.

1.15 BEFORE INSTALLATION

Before installing this equipment, check the ratings of both the generator and the transfer switch. Read "Emergency Isolation Method" and "Total Circuit Isolation Method" in the installation manual (Part No. 079699).

The generator's rated wattage/amperage capacity must be adequate to handle all electrical loads that the unit will power. It may be necessary to group the critical (essential) loads together and wire them into a separate "emergency" distribution panel.

This generator can be installed in conjunction with a Generac "GTS" type transfer switch, if necessary (see Section 2.9).

The standard transfer switch ATS mode does not have sensing or controlling circuit boards. Instead, the generator control console houses a "Printed Circuit Board Assembly", which controls all phases of operation, including engine start up and load transfer.

2.1 STANDBY GENERATOR INSTALLATION

DANGER

Connecting this generator to an electrical system normally supplied by an electric utility shall be by means of a transfer switch, so as to isolate the electric system from the utility distribution system when the generator is operating. Failure to isolate the electric system by these means will result in damage to the generator and may also result in injury or death to utility workers due to backfeed of electrical energy.

If an open bottom is used, the engine-generator must be installed over non-combustible materials and should be located such that combustible materials are not capable of accumulating under the generator set.

Only qualified, competent installation contractors or electricians thoroughly familiar with applicable codes, standards and regulations should install this standby electric power system. The installation must comply strictly with all codes, standards and regulations pertaining to the installation.

CAUTION

After the system has been installed, do nothing that might render the installation in noncompliance with such codes, standards and regulations.

NOTE:

For more information about the installation of a standby system, order *Engine-Generator Standby Electric Power Systems Installer's Guide and Reference Manual* (part number 046622) from a Generac Authorized Service Dealer.

◆ 2.1.1 NFPA STANDARDS

The following published standards booklets pertaining to standby electric systems are available form the National Fire Protection Association (NFPA), Batterymarch Park, Quincy, MA 02269:

- NFPA No. 37, STATIONARY COMBUSTION ENGINES AND GAS TURBINES.
- NFPA No. 76A, ESSENTIAL ELECTRICAL SYSTEMS FOR HEALTH CARE FACILITIES.
- NFPA No. 220, STANDARD TYPES OF BUILDING CONSTRUCTION

- NFPA No. 68, GUIDE FOR EXPLOSION VENTING
- NFPA No. 70, NATIONAL ELECTRICAL CODE.
- NFPA No. 30, FLAMMABLE AND COMBUSTIBLE LIQUIDS CODE.
- NFPA No. 10, INSTALLATION, MAINTENANCE AND USE OF PORTABLE FIRE EXTINGUISHERS.

◆ 2.1.2 OTHER PUBLISHED STANDARDS

In addition to NFPA standards, the following information pertaining to the installation and use of standby electric systems is available:

- Article X, NATIONAL BUILDING CODE, available from the American Insurance Association, 85 John Street, New York, N.Y. 10038.
- AGRICULTURAL WIRING HANDBOOK, obtainable from the Food and Energy Council, 909 University Avenue, Columbia, MO, 65201.
- ASAE EP-364.2, INSTALLATION AND MAINTENANCE OF FARM STANDBY ELECTRIC POWER, available from the American Society of Agricultural Engineers, 2950 Niles Road, St. Joseph, MI 49085.
- A52.1, AMERICAN NATIONAL STANDARD FOR CHIMNEYS, FIREPLACES AND VENTING SYSTEMS, available from the American National Standard Institute, 1430 Broadway, New York, N.Y. 10018.

2.2 GENERATOR LOCATION

Install the generator set, in its protective enclosure outdoors, where adequate cooling and ventilating air always is available. Consider these factors:

- Install the unit where air inlet and outlet openings will not become obstructed by leaves, grass, snow, etc. If prevailing winds will cause blowing or drifting, consider using a windbreak to protect the unit.
- Install the generator on high ground where water levels will not rise and endanger it.
- Allow sufficient room on all sides of the generator for maintenance and servicing. A good rule is to allow five feet of space on all sides.
- Where strong prevailing winds blow from one direction, face the generator air inlet openings into the prevailing winds.
- Install the generator as close as possible to the transfer switch. This reduces the length of wiring and conduit.
- Install the generator as close as possible to the fuel supply, to reduce the length of piping. HOWEVER, REMEMBER THAT LAWS OR CODES MAY REGULATE THE DISTANCE.

2.3 GENERATOR MOUNTING AND SUPPORT

Retain the generator compartment to a concrete slab with 1/4-inch masonry type anchor bolts. Be sure the bolts are long enough to retain the compartment. The slab should be at least six inches thick and should extend beyond the enclosure to a distance of at least three inches on all sides.

2.4 BASIC STANDBY ELECTRIC SYSTEM

Figure 2.1 shows a schematic diagram of a basic standby electric system. Both the UTILITY power supply and the STANDBY GENERATOR output are connected to an approved transfer switch. The transfer switch is required by electrical code and serves the following functions:

- Permits the LOAD circuits to be connected to only one power supply at a time.
- Prevents electrical backfeed between the generator and the UTILITY power circuits.

Notice that both the STANDBY and the UTILITY power supplies to the transfer switch are protected against overload by a main line circuit breaker.

Figure 2.1 – Basic Standby Electric System

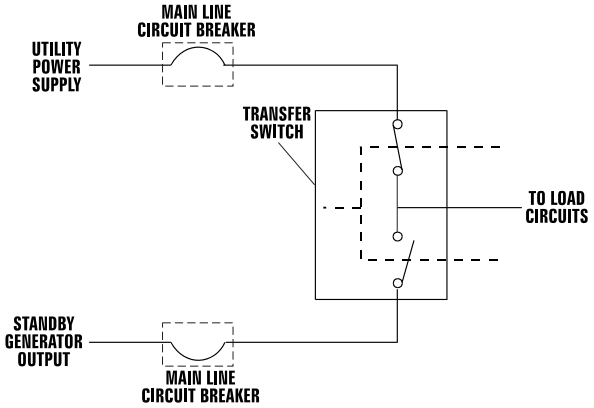

NOTE:

Generac recommends the use of a Generac Power Systems "GTS" type transfer switch in conjunction with this generator.

2.5 EMERGENCY CIRCUIT ISOLATION METHOD

This prevents overloading the generator by keeping electrical loads below the wattage/amperage capacity of the generator. If the generator is powering only critical loads, within its wattage/amperage capacity, during utility power outages, consider using the emergency circuit isolation method.

Critical electrical loads are grouped together and wired into a separate "Emergency Distribution Panel." The generator only supplies electrical circuits connected to the emergency distribution panel during utility power outages. Load circuits powered by that panel must be within the wattage/amperage capacity of the generator set. The transfer switch must meet the following requirements:

- It must have an ampere rating equal to the total amperage rating of the emergency distribution panel circuit.
- It must be installed between the building's main distribution panel and the emergency distribution panel.

2.6 TOTAL CIRCUIT ISOLATION METHOD

When a generator capable of powering all electrical loads in the circuit is to be installed, the "Total Circuit Isolation Method" may be used. The following apply to the transfer switch in this type of system.

- Ampere rating of the transfer switch must equal the ampere rating of the normal incoming utility service.
- The transfer switch is installed between the utility service entrance and the building distribution panel.

2.7 GROUNDING THE GENERATOR

The National Electrical Code requires the frame and external electrically conductive parts of this equipment to be properly connected to an approved earth ground and/or grounding rods. For that purpose, a GROUND LUG (Figure 2.2) is provided on the generator mounting base. Consult a qualified electrician for grounding requirements in the area. Grounding procedures must meet local regulations.

Figure 2.2 – Generator Grounding Lug (typical)

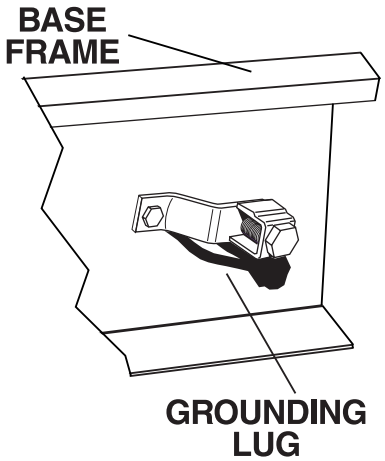

DANGER

Do not connect the ground wire to any pipe that carries a flammable or explosive substance – FIRE or an EXPLOSION may result.

Proper grounding helps protect personnel against electrical shock in the event of a ground fault condition in the generator or in connected electrical devices. In addition, grounding helps dissipate static electricity that often builds up in ungrounded devices.

2.8 GENERATOR AC NEUTRAL CONNECTIONS

Generac uses an UNGROUNDED AC neutral. Grounding is recommended only at the main service entrance. If the neutral wire is grounded and one of the phase loads becomes grounded, the excessive current opens the load circuit breaker or collapses the generator field. The actual result depends on the electrical characteristics of the particular installed generator.

2.9 USING A "GTS" TRANSFER SWITCH

When required, the pre-packaged standby generator can be installed with a standard Generac "GTS" type automatic transfer switch.

In this application, the GTS is responsible for utility sensing, weekly exercising, and load transferring.

Position two of the eight-position DIP switch is used to turn over this control to the GTS (GTS mode).

In order for the battery charger to work, it is necessary to provide a fused 240 VAC utility source to the N1 and N2 terminals in the control panel.

Pos2 ON — GTS Application

- The control board will NOT monitor utility.
- The control board will NOT perform a weekly exercise. (The five red LEDs will flash one at a time in this mode.)
- The control board will NOT activate the transfer output.
- The control board WILL monitor all engine conditions and shut down on all the faults listed in this document.

Pos2 OFF — ATS Application

- The control board will perform all of the automatic features listed in this document.
- The two-wire start connections should NOT be used.

NOTE:

If the generator is installed in conjunction with a GTS type transfer switch, refer to the applicable transfer switch manual for exact operating parameters and timing sequences.

2.10 EXHAUST MANIFOLD INSTALLATION

1. If necessary, clean gasket surfaces on exhaust manifold and cylinder head.
2. Install exhaust manifold and exhaust manifold gasket.
3. Install fasteners.

NOTE:

Exhaust manifold fasteners must be tightened in two stages.

4. Tighten fasteners to 20-30 N-m (15-22 lb-ft) during the first stage.
5. Retighten fasteners to 60-80 N-m (44-59 lb-ft) during the second stage.

2.11 INTAKE MANIFOLD INSTALLATION

1. Clean and inspect the mounting surfaces of the intake manifold and the cylinder head. Both surfaces must be clean and flat (Figure 2.3).
2. Clean and lightly oil the manifold bolt/stud threads.
3. Install a new lower intake manifold gasket.
4. Position the lower intake manifold to the cylinder head.
5. Install retaining bolts/studs finger tight.
6. Tighten all bolts/studs to specifications in the tightening sequence shown:
   - First pass = 7=10 N-m (5-7 lb-ft).
   - Final pass = 26-38 N-m (19-28 lb-ft).

Figure 2.3 — Intake Manifold Installation

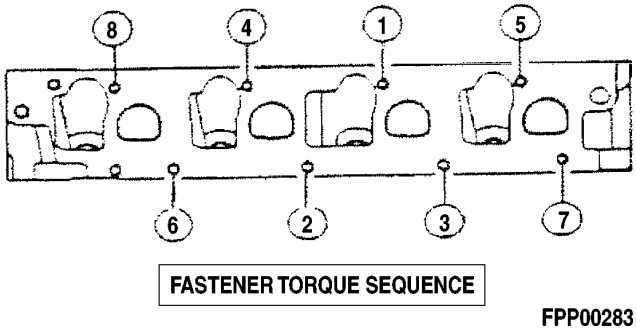

2.12 CYLINDER HEAD INSTALLATION

1. Position head gasket on the block.
2. Position cylinder head to cylinder block.
3. Install 10 cylinder head bolts in numerical sequence. Tighten to 70 N-m (52 lb-ft) in sequence. Retighten to 70 N-m (52 lb-ft) in sequence. Then turn all head bolts an additional 90 - 100 degrees in sequence.

Figure 2.4 — Cylinder Head Installation

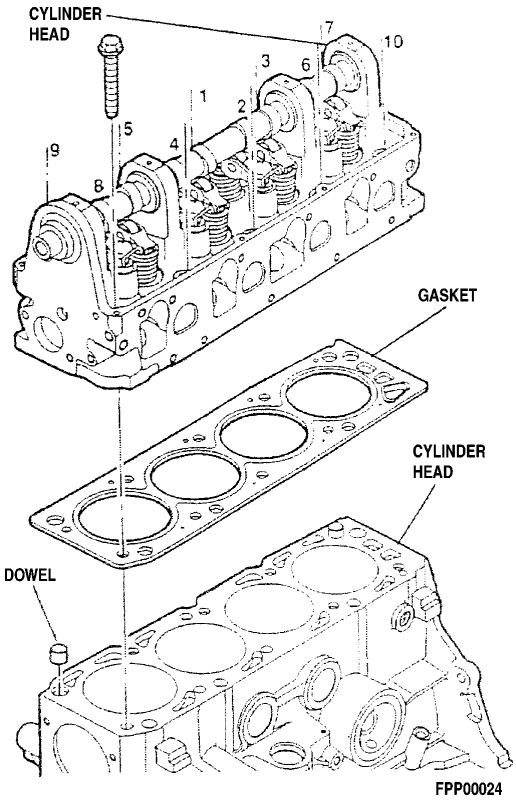

2.13 BATTERY INSTALLATION

DANGER

Standby generators installed with automatic transfer switches will crank and start automatically when NORMAL (UTILITY) source voltage is removed or is below an acceptable preset level. To prevent such automatic start-up and possible injury to personnel, do not connect battery cables until certain that normal source voltage at the transfer switch is correct; the generator main line circuit breaker is switched to OFF; the AUTO/0FF/MANUAL switch on the control console is switched to OFF; the 15A and 5A fuses have been removed from the control console; UTILITY fed supply to battery charger (terminals N1 and N2 are removed; and the system is ready to be placed into operation. Ensure that the 5A and 15A fuses in the control panel are removed when connecting or disconnecting battery cables.

Storage batteries give off explosive hydrogen gas. This gas can form an explosive mixture around the battery for several hours after charging. The slightest spark can ignite the gas and cause an explosion. Such an explosion can shatter the battery and cause blindness or other injury. Any area that houses a storage battery must be properly ventilated. Do not allow smoking, open flame, sparks or any spark producing tools or equipment near the battery.

Battery electrolyte fluid is an extremely caustic sulfuric acid solution that can cause severe burns. Do not permit fluid to contact eyes, skin, clothing, painted surfaces, etc. Wear protective goggles, protective clothing and gloves when handling a battery. If fluid is spilled, flush the affected area immediately with clear water.

WARNING

Do not dispose of the battery in a fire. The battery is capable of exploding.

Do not open or mutilate the battery. Released electrolyte can be toxic and harmful to the skin and eyes.

The battery represents a risk of high short circuit current. When working on the battery, always remove watches, rings or other metal objects, and only use tools that have insulated handles.

◆ 2.13.1 VENTED BATTERIES

CAUTION

The electrolyte is a dilute sulfuric acid that is harmful to the skin and eyes. It is electrically conductive and corrosive. The following procedures are to be observed:

- **Wear full eye protection and protective clothing,**
- **Where electrolyte contacts the skin, wash it off immediately with water,**
- **Where electrolyte contacts the eyes, flush thoroughly and immediately with water and seek medical attention, and**
- **Spilled electrolyte is to be washed down with an acid-neutralizing agent. A common practice is to use a solution of one pound (500 grams) bicarbonate of soda to one gallon (4 liters) of water. The bicarbonate of soda solution is to be added until the evidence of reaction (foaming) has ceased. The resulting liquid is to be flushed with water and the area dried.**

Lead acid batteries present a risk of fire because they generate hydrogen gas. The following procedure are to be followed:

- **DO NOT SMOKE when near batteries,**
- **DO NOT cause flame or spark in battery area, and**
- **Discharge static electricity from body before touching batteries by first touching a grounded metal surface.**

Servicing of batteries is to be performed or supervised by personnel knowledgeable of batteries and the required precautions. Keep unauthorized personnel away from batteries.

For recommended batteries, see Section 4.6.4. All batteries must be at 100 percent state-of-charge before they are installed on the generator.

When using maintenance-free batteries, it is not necessary to check the specific gravity or electrolyte level. Have these procedures performed at the intervals specified in Section 4, “Maintenance.” A negative ground system is used. Battery connections are shown on the wiring diagrams. Make sure all batteries are correctly connected and terminals are tight. Observe battery polarity when connecting batteries to the generator set.

NOTE:

Damage will result if the battery connections are made in reverse.

2.14 PREPARATION BEFORE START-UP

The instructions in this section assume that the standby generator has been properly installed, serviced, tested, adjusted and otherwise prepared for use by a competent, qualified installation contractor. Be sure to read the “Safety Rules” on pages 2 and 3, as well as all other safety information in this manual, before attempting to operate this (and related) equipment.

◆ 2.14.1 PRIOR TO INITIAL START-UP

CAUTION

Prior to initially starting the generator, it must be properly prepared for use. Any attempt to crank or start the engine before it has been properly serviced with the recommended types and quantities of engine fluids (oil, coolant, fuel, etc.) may result in an engine failure.

Before starting the generator for the first time, the installer must complete the following procedures. For follow-up maintenance information and/or service intervals, please refer to Section 4, “Maintenance.”

◆ 2.14.2 TRANSFER SWITCH

If this generator is used to supply power to any electrical system normally powered by an electric utility, the National Electrical Code requires that a transfer switch be installed. The transfer switch prevents electrical backfeed between two different electrical systems, (for additional information, see the applicable transfer switch manual for this unit). The transfer switch, as well as the generator and other standby components, must be properly located and mounted in strict compliance with applicable codes, standards and regulations.

◆ 2.14.3 FUEL SYSTEM

Make sure the fuel supply system to the generator (a) delivers the correct fuel at the correct pressure and (b) is properly purged and leak tested according to code. No fuel leakage is permitted.

◆ 2.14.4 GENERATOR SET LUBRICATION

Check the engine crankcase oil level before operating and add oil to the proper level – the dipstick "FULL" mark. Never operate the engine with the oil level below the dipstick "ADD" mark. See "Specifications" and "Engine Oil Recommendations".

NOTE:

This engine is shipped from the manufacturer with 15W-40 oil. This oil should be changed after 30 hours of operation.

◆ 2.14.5 ENGINE COOLANT

Have the engine cooling system properly filled with the recommended coolant mixture. Check the system for leaks and other problems. See "Specifications" and "Coolant".

◆ 2.14.6 BELT TENSION

Check the engine fan belt tension and condition prior to placing the unit into service and at recommended intervals. Belt tension is correct when a force of approximately 22 pounds (10 kg), applied midway between pulleys, deflects the belt about 3/8- to 5/8-inches (10 to 16 mm).

◆ 2.14.7 ELECTRICAL SYSTEM

Make sure the generator is properly connected to an approved earth ground and/or ground rod.

Make sure the generator battery is fully charged, properly installed and interconnected, and ready for use.

Check to ensure that there are no loose electrical connections. Restrain any loose wires to keep them clear of any moving generator set components.

3.1 GTS TRANSFER SWITCH

When required, the pre-packaged standby generator can be installed with a Generac "GTS" type automatic transfer switch. Set DIP switch on engine control PCB to GTS-type (see Section 3.8).

When using a standard GTS type transfer switch, it controls automatic operation and automatic transfer as follows:

- Solid state circuits in the transfer switch monitor utility power source voltage.
- When utility source voltage drops below a pre-set level, transfer switch action signals the generator to start. The engine then cranks and starts as controlled by the pre-packaged generator's Control Module circuit board.
- After the engine starts and when the generator AC output voltage and frequency have reached a pre-set value, transfer switch circuits signal the transfer switch main contacts to actuate to the "Standby" power source side. Generator AC output then powers load circuits.
- When the utility power source voltage is restored above a pre-set level, transfer switch circuits signal the switch main contacts to move back to their utility power source side.
- Following re-transfer back to the utility power source side, transfer switch circuit board action signals the generator to stop. Engine then shuts down.

GTS Mode Operation

When in GTS mode, the control board will respond as follows based on the AUTO/OFF/MANUAL switch position.

OFF — The generator will not start and run in this position.

MANUAL — The control board will start and run the generator whenever the switch is in the manual position.

AUTO — The control board will monitor the two-wire start circuit. When a two-wire start is issued the control board will immediately start and run the generator. Whe the two-wire start is removed the control board will immediately stop the generator.

NOTE:

If the generator is installed in conjunction with a GTS type transfer switch, refer to the applicable transfer switch manual for exact operating parameters and timing sequences.

For proper battery charger operation, it will be necessary to supply a fused 240VAC utility fed supply to terminals N1 and N2 in the control panel.

3.2 CONTROL CONSOLE COMPONENTS

The components of a home standby generator control console (Figure 3.1) are as follows:

Figure 3.1 - Generator Control Console

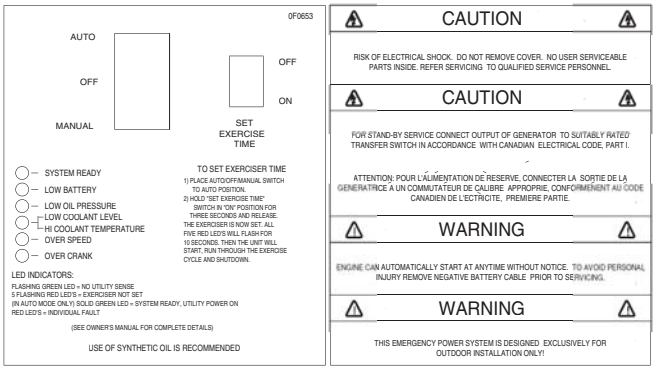

◆ 3.2.1 AUTO/OFF/MANUAL SWITCH

Use this three-position switch as follows:

- Set the switch to AUTO for fully automatic operation. See "Automatic Operation" (Section 3.6).
- Set switch to MANUAL position to crank and start the generator engine.
- Set switch to OFF position to shut down an operating engine. With OFF selected, operation will not be possible.

⚠ DANGER ⚠

⚠ With switch set to AUTO, engine can crank and start suddenly without warning. Such automatic start up normally occurs when utility source voltage drops below a pre-set level. To prevent possible injury that might be caused by such sudden starts, set AUTO/OFF/ MANUAL switch to OFF before working on or around the unit. Then, place a "DO NOT OPERATE" tag on control console.

◆ 3.2.2 FAULT INDICATOR LEDS (SEE CHART)

These red LEDs turn ON when one or more of the following engine faults occurs and the engine shuts down.

- Low Oil Pressure
- Overcrank
- Low Battery
- Overspeed/Engine Speed Signal Fault
- High Coolant Temperature/Low Coolant Level

See Section 1.7 for further explanation of engine protection functions.

Condition	System Ready (Green)	Low Bat (Red)	Low Oil (Red)	High Temp (Red)	Over Speed (Red)	Over Crank (Red)	Switch Position		
							Manual	Auto	Off
Generator Switch is in the OFF Mode.	OFF	X	OFF	OFF	OFF	OFF			O
System Ready for Automatic Start	ON	X	OFF	OFF	OFF	OFF		O	
Generator Switch is in the MANUAL Mode	OFF	X	OFF	OFF	OFF	OFF	O		
Weekly Exerciser is not set	X	Flashing	Flashing	Flashing	Flashing	Flashing	O	O	O
		(----------1 sec rate----------)							
Battery Voltage <12V for >1 minute	X	ON (Non-latching)					O	O	O
Battery Voltage <6V	X	ON					O	O	
Unit Shutdown due to Low Oil Pressure	OFF	X	ON				O	O	
Unit Shutdown due to High Coolant Temperature or Low Coolant Level	OFF	X		ON			O	O	
Unit Shutdown due to Engine Overspeed	OFF	X			ON		O	O	
Unit Failed to Start during it's Crank Cycle	OFF	X				ON	O	O	
Utility Voltage is <45% of Nominal	Flashing 1 sec rate	X					O	O	
Engine Speed Signal Fault	OFF	X			Flashing		O	O	
Control Board is in GTS Mode	OFF	X	The five RED LED's will turn on one at a time				O	O	O
X = indicates that the LED can be ON or OFF depending on the operating conditions.									

◆ 3.2.3 15 AMP FUSE

This fuse protects the control console's DC control circuit against electrical overload and is located inside the control panel. If the fuse has melted open because of an overload, engine cranking and startup cannot occur. If the fuse needs to be replaced, use only an identical 15-amp replacement fuse (type ATO).

◆ 3.2.4 5 AMP FUSE

This fuse protects the battery charger against electrical overload and is located inside the control panel. If the fuse needs to be replaced, use only an identical 5-amp replacement fuse (type ATO).

NOTE:

This fuse will not remove the + battery input power from the PCB when it opens. This means the exercise timer will not be reset.

◆ 3.2.5 SET EXERCISE TIME SWITCH

This switch allows programming the generator to start and exercise automatically. "See Weekly Exercise Cycle", and Figure 3.3.

◆ 3.2.6 SYSTEM READY LED

The System Ready LED (green) has two main purposes. First, the LED will be ON when the AUTO/OFF/MANUAL switch is in the AUTO position, utility is present, and there are no system alarms. This ON state indicates the system is fully ready for automatic operation.

The system ready LED will be OFF when the switch is in the MANUAL or OFF positions.

The system ready LED is also used to indicate the presence of utility sensing at the PCB when the switch is either in the AUTO or MANUAL modes. The LED will flash at the rate of 1/2 second on, 1/2 second off if the utility sensing level is below the transfer back threshold.

This secondary function is only available with DIP switch two in the OFF position (ATS - automatic transfer switch application).

3.3 MANUAL TRANSFER AND START-UP

To transfer electrical loads to the Standby (EMERGENCY) power source side and start the engine manually, refer to the Owner's Manual of the particular transfer switch.

3.4 ENGINE GOVERNOR GAIN ADJUSTMENTS

Engine speed governing is also controlled by the engine control board. The engine governor gains have been set by the factory during final testing of the generator and should not be adjusted.

If, however, adjustments are necessary, the following procedure should be followed (Figure 3.2 and Section 3.8):

1. Move DIP switch 8 to the test mode (OFF position).
2. Set all three potentiometers (pots) fully counterclockwise.
3. Under no load condition, increase the GAIN pot as much as possible without causing instability.
4. Apply 1/4, 1/2, 3/4 and full load to the unit. Decrease the GAIN pot if there is instability at any load point.
5. Under full load condition, increase the stability pot until the unit returns to 60 Hertz (or 50 Hertz in 50 Hertz applications).
6. Reduce load to 3/4, 1/2, 1/4 and no load. Decrease the stability pot if there is instability at any load point.
7. Adjust differential pot to make the recovery to load changes even faster and minimize load change undershoot and overshoot. If it is set too high, it may introduce oscillations at some load. It can be set to zero (full CCW) if a small amount causes oscillations at some load.
8. Leave DIP switch 8 in Test mode.

Figure 3.2 — Engine Governor Adjustment

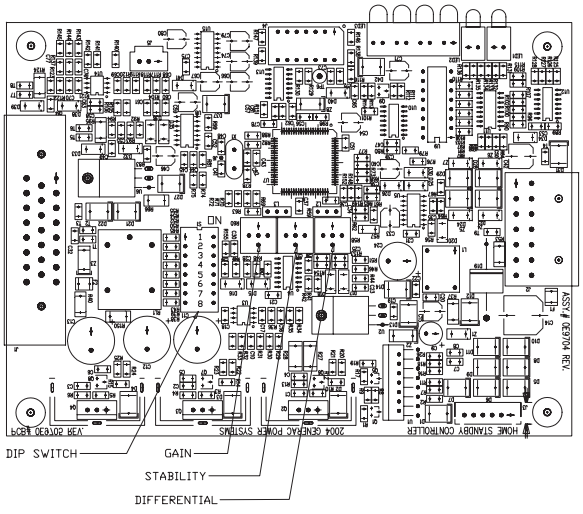

POS	OFF	ON	DESCRIPTION
1	50	60	FREQ. HZ
2	ATS	GTS	TRANSFER SW. TYPE
3	BOSCH	STEPPER	GOVERNOR TYPE
4	LP	NG	FUEL TYPE
5	3.9L	2.5/3.0L	ENGINE TYPE
6	6 CYL	4 CYL	# OF CYLINDERS
7	CCW	CW	STEPPER ROTATION
8	TEST	NORMAL	OPERATING MODE

3.5 MANUAL RETRANSFER AND SHUTDOWN

When utility power source voltage has been restored, electrical loads may be transferred back to that source and the generator can be shut down as follows:

- Verify that utility power supply voltage to the transfer switch has been positively turned Off, using whatever means provided (such as utility main line circuit breaker).
- Set the generator's main circuit breaker to its Off or Open position.
- Let the generator engine run at no-load for a few minutes, to stabilize internal unit temperatures.
- On the generator console, set the Auto/Off/ Manual switch to Off. Wait for engine to come to a complete stop.
- For transfer to utility position, refer to the Owner's Manual of the particular transfer switch.
- Turn on the utility power supply to the transfer switch, using whatever means provided (such as a utility main line circuit breaker). The utility power source now powers the loads.

3.6 AUTOMATIC OPERATION

To set the system for fully automatic operation, proceed as follows:

- Check that load circuits are connected to the utility power supply.
- Set the AUTO/OFF/MANUAL switch to its AUTO position.
- Set the generator main circuit breaker to its ON or CLOSED position.

3.7 WEEKLY EXERCISE CYCLE

The engine control board will start and run the generator once every seven days for approximately 12 minutes. If utility should fail during this exercise period, the engine control board will transfer the load to the generator output and continue to run until utility returns.

On the day, and at the time of day chosen for the generator to exercise, set the weekly exercise cycle as follows:

1. Place the AUTO/OFF/MANUAL switch in the AUTO position.
2. Press and hold the "Set Exercise Time" switch for five seconds, then release (Figure 3.3).

At this time all five red LEDs will flash for approximately 10 seconds, then the engine will start and run for it's 12 minute exercise period, then shut down. The generator will now start and run each week at the same time.

If DC power to the control board is lost, the weekly exercise setting will be lost. This is indicated by all five red LEDs continually flashing. In this state the generator will still start and run in manual mode, or automatically start and run if utility is lost while in Auto mode, but it will not perform a weekly exercise cycle.

If a failure occurs while running in this mode, the five red LEDs will stop flashing, the individual fault LED will turn on and the engine will shut down. Once the AUTO/OFF/MANUAL switch has been switched to OFF, the individual fault LED will turn OFF and the five red LEDs will begin flashing to show exercise has still not been set.

3.8 CONTROL BOARD DIP SWITCH SETTINGS

Located on the control board is an eight position DIP switch (see Figure 3.2). The eight different switches, are used to configure the control board for the specific engine and governor being used and are pre-set at the factory.

CAUTION

If the DIP switch settings are not set correctly, the generator may not start or operate correctly.

WARNING

240 VAC can be present within the control panel.

If it is necessary to select an alternate switch position, move the AUTO/OFF/MANUAL switch to the OFF position. Remove the 15 amp fuse in the generator control panel. Move the DIP switch position that needs to be changed to its new position. Wait five seconds, then re-install the 15 amp fuse.

The ON position is marked on the DIP switch and is shown in Figure 3.2.

Switch Position 1 — Selects the generator alternator output frequency and is factory pre-set for 60 Hz.

Switch Position 2 — Selects the type of transfer switch and is factory pre-set for an automatic transfer switch (ATS).

Switch Position 3 — Selects the type of governor control used. A stepper motor is used with models 004990-0, 005052-0 and 005048-0. A Bosch governor is used with model 005078-0.

Switch Position 4 — Selects the type of fuel being used and is factory pre-set for natural gas (NG).

Switch Position 5 — Selects the engine displacement and is factory pre-set for a 2.5 liter (2.5L) engine.

Switch Position 6 — Selects the number of engine cylinders and is factory pre-set for four cylinders.

Switch Position 7 — Selects the direction of rotation of the governor stepper motor (when used) and is factory pre-set for CCW rotation (rotation is observed looking at the stepper shaft as it moves from closed throttle to open throttle). The position of this DIP switch does not matter if a Bosch governor motor is used (model 005078-0).

Switch Position 8 — Selects whether the control is in the Normal Mode of operation or Test Mode. In the Normal Mode of operation, pre-determined governor gains are used and the gain trimpots on the control board (Gain, Stability, and Differential) are not active and have no effect on the gains. In Test Mode the gain trimpots are active and can be adjusted. See Section 3.4.

Figure 3.3 - "Set Exercise Time" Switch

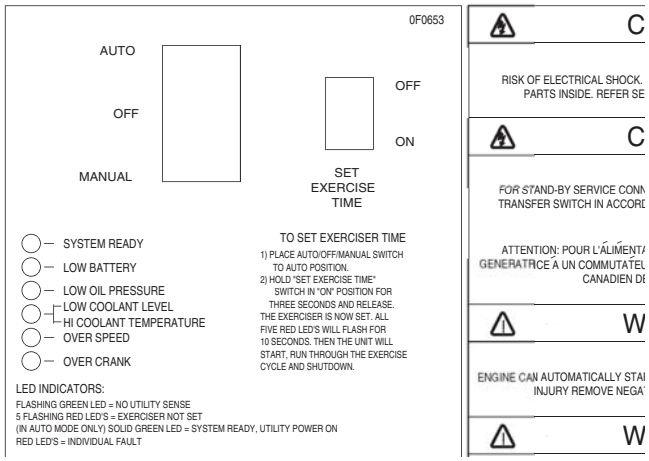

3.9 VOLTAGE REGULATOR ADJUSTMENT

Four adjustment potentiometers are provided on the voltage regulator installed in the control panel (Figure 3.4). These are (a) voltage adjust, (b) gain, (c) stability and (d) underfrequency adjust. The voltage regulator potentiometers have been factory set and SHOULD NOT be adjusted. If however, adjustments are necessary, contact the local Generac Dealer to implement the following procedure.

WARNING

High voltage is present inside the control panel during this procedure.

1. Disconnect all electrical loads from the generator (initial adjustments are done under no-load conditions).
2. Connect an accurate AC voltmeter and AC frequency meter to the generator's AC output leads.
3. On the voltage regulator, set the potentiometers as follows:
   A. Turn the Voltage Adjust pot fully counterclockwise (CCW).
   B. Set the GAIN pot to its centered (mid) position.
   C. Set the STABILITY pot to its centered (mid) position.
   D. DO NOT adjust the UNDERFREQUENCY ADJUST pot.
4. Start the engine. Let it stabilize and warm up at no-load.
5. Verify that the three voltage regulator's LED's are ON.
6. Check the reading on the AC frequency meter.
7. Turn the voltage regulator's VOLTAGE ADJUST pot to obtain a line-to-line voltage of:
   A. 240 VAC if the generator has been configured for 60 Hertz operation.
   B. 200 VAC if the generator has been configured for 50 Hertz operation.
8. If the RED REGULATOR LED is flashing, adjust the STABILITY pot in either direction until the flashing stops.
9. Apply an electrical load and check the engine speed recovery.
   A. Adjust the UNDERFEQUENCY ADJUST pot CCW to reduce load during engine recovery.
   B. For flat regulation (no voltage decrease as frequency drops) set the UNDERFREQUENCY ADJUST pot fully CW.
   C. To obtain a constant voltage regulation as frequency decreases, set the UNDERFREQUENCY ADJUST pot fully CCW.
10. With the electrical load still applied, check the REGULATOR LED for flashing. If the LED is flashing, adjust the STABILITY pot until the flashing stops.

Figure 3.4 — Voltage Regulator

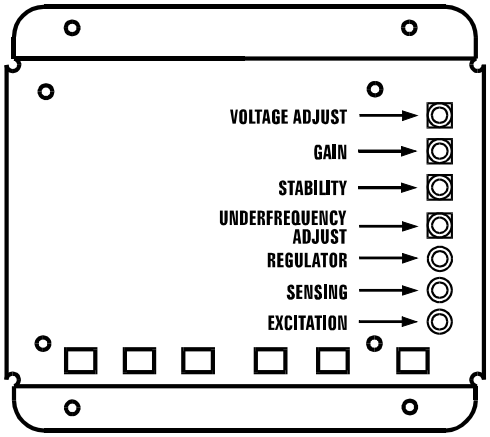

11. If better response is needed, adjust the GAIN pot clockwise (CW) as needed. Then (if needed) correct for stability by adjusting the STABILITY pot.
12. Turn OFF the electrical loads.
13. Verify that all the voltage regulator's LED's are ON.
14. Turn OFF the generator.

4.1 MAINTENANCE PERFORMED BY AUTHORIZED SERVICE FACILITIES

A. EVERY THREE MONTHS

1. Check battery condition.
2. Inspect and test fuel system.
3. Check transfer switch.
4. Inspect exhaust system.
5. Check engine ignition system.
6. Check fan belts.

B. ONCE EVERY SIX MONTHS

1. Test Engine Safety Devices (low oil pressure, low coolant level, high coolant temperature).

C. ONCE ANNUALLY

1. Test engine governor; adjust or repair, if needed.
2. Clean, inspect generator.
3. Flush cooling system.

D. FIRST 100 OPERATING HOURS

1. Change engine oil and oil filter. After initial change, service engine oil and filter at 150 operating hours or six months, whichever comes first.
2. Retorque cylinder head (see torque specs).
3. Retorque intake and exhaust manifold (see torque specs).

E. EVERY 500 OPERATING HOURS

1. Service air cleaner.
2. Check starter.
3. Check engine DC alternator.

F. EVERY 800 OPERATING HOURS

1. Retorque cylinder head (see torque specs).
2. Retorque intake and exhaust manifold (see torque specs).
3. Check engine compression.
4. Check valve clearance.

4.2 COOLING SYSTEM

Air intake and outlet openings in the generator compartment must be open and unobstructed for continued proper operation. This includes such obstructions as high grass, weeds, brush, leaves and snow.

Without sufficient cooling and ventilating air flow, the engine/generator quickly overheats, which causes it to shut down. (See the installation diagram.)

WARNING

The exhaust system parts from this product get extremely hot and remains hot after shutdown. High grass, weeds, brush, leaves, etc. must remain clear of the exhaust. Such materials may ignite and burn from the heat of the exhaust system.

4.3 OVERLOAD PROTECTION FOR ENGINE DC ELECTRICAL SYSTEM

Engine cranking, start up and running are controlled by a solid state Engine Controller circuit board. Battery voltage is delivered to that circuit board via a 15 amp fuse. These overcurrent protection devices will open if the circuit is overloaded.

CAUTION

If a circuit breaker opens or a fuse element melts, find the cause of the overload before resetting the circuit breaker or replacing the fuse.

4.4 CHECKING FLUID LEVELS

◆ 4.4.1 CHECK ENGINE OIL

Check engine crankcase oil level (Figure 4.1) at least every 20 hours of operation, or prior to use.

- Remove oil dipstick and wipe dry with a clean, lint-free cloth.
- Install oil dipstick, then remove again.
- Oil should be between FULL and ADD marks.
- If oil level is below the dipstick ADD mark, remove oil fill cap. Add the recommended oil to bring oil level up to the FULL mark. DO NOT FILL ABOVE THE "FULL" MARK. See "Engine Oil Recommendations" for recommended oils.

Figure 4.1 - Oil Dipstick and Oil Fill Cap

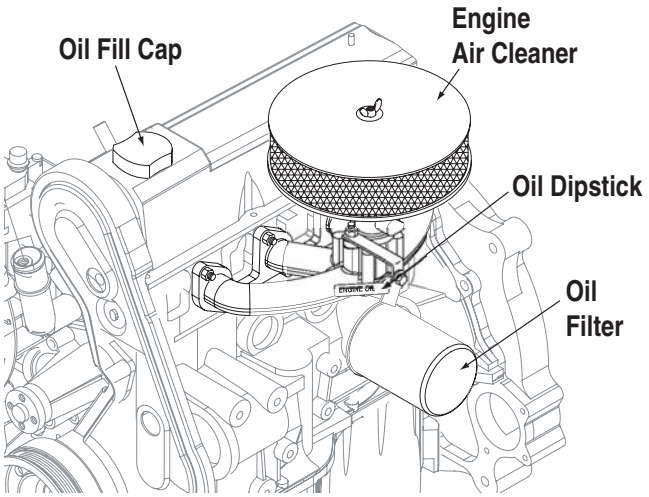

◆ 4.4.2 BATTERY FLUID

Check battery electrolyte fluid based on the Maintenance Schedule. Fluid should cover separators in all battery cells. If fluid level is low, add distilled water to cover tops of separators. DO NOT USE TAP WATER IN BATTERY.

◆ 4.4.3 ENGINE COOLANT

Check coolant level in coolant recovery bottle. See Specifications.

- Add recommended coolant mixture as necessary.
- Periodically remove radiator pressure cap (only when engine has cooled down) to make sure the coolant recovery system is functioning properly. Coolant should be at bottom of radiator filler neck. If coolant level is low, inspect gasket in radiator pressure cap. Replace cap, if necessary. To have pressure cap tested, contact an authorized Generac Service Dealer. Inspect cooling system and coolant recovery system for leaks.

4.5 MAINTENANCE OWNER/ OPERATOR CAN PERFORM

◆ 4.5.1 CHECK ENGINE OIL LEVEL

Refer to “Checking Fluid Levels”.

◆ 4.5.2 CHECK BATTERY

- See “Checking Fluid Levels”.
- Check battery cables for condition, tightness, corrosion or damage. Clean, tighten or replace as necessary.

◆ 4.5.3 EXERCISE SYSTEM

Start the generator engine at least once every seven days and let it run at least 12 minutes. See “Weekly Exercise Cycle”.

◆ 4.5.4 INSPECT COOLING SYSTEM

- Inspect engine cooling system. See “Maintenance Schedule”.
- Check hoses for damage, deterioration, leaks, etc. Correct any discrepancies found.
- Check hose clamps for tightness.

◆ 4.5.5 CHECK ENGINE COOLANT LEVEL

See “Checking Fluid Levels”.

◆ 4.5.6 PERFORM VISUAL INSPECTION

Complete a thorough visual inspection of the entire engine-generator monthly. Look for obvious damage, loose, missing or corroded nuts, bolts and other fasteners. Look for fuel, oil or coolant leaks.

◆ 4.5.7 INSPECT EXHAUST SYSTEM

Inspect the exhaust system at least once every three months. Check all exhaust system pipes, mufflers, clamps, etc. for condition, tightness, leaks, security, damage.

◆ 4.5.8 CHECK FAN BELT

- Inspect fan belts every three months. Replace any damaged, deteriorated, worn or otherwise defective belt.
- Check fan belt tension. Thumb pressure, exerted midway between pulleys, should deflect about 3/8 to 5/8 of an inch. Adjust belt tension as required.

◆ 4.5.9 INSPECT ENGINE GOVERNOR

Visually inspect electronic governor.

⚠ DANGER ⚠

⚠ Do not attempt to adjust the governor. Only qualified service facilities should adjust the governor. Excessively high operating speeds are dangerous and increase the risk of personal injury. Low speeds impose a heavy load on the engine when adequate engine power is not available and may shorten engine life. Correct rated frequency and voltage are supplied only at the proper governed speed. Some connected electrical load devices may be damaged by incorrect frequency and/or voltage. Only qualified service technicians should adjust the governed speed.

◆ 4.5.10 CHANGING ENGINE OIL

Refer to maintenance performed by authorized service facilities for engine oil and filter change frequencies.

Drain the oil while the engine is still warm from running. This means warm up the engine, shut it down and drain immediately as follows:

1. Remove OIL DRAIN HOSE from its retaining clip.
2. Loosen and remove OIL DRAIN HOSE CAP. Drain oil completely into suitable container.
3. When all oil has drained, install and tighten OIL DRAIN HOSE CAP, and re-install into its retaining clip.
4. Turn OIL FILTER (Figure 4.1) counterclockwise and remove. Properly dispose of old filter.
5. Apply light coating of new engine oil to seal of new oil filter. Install FILTER and tighten by hand only. DO NOT OVER TIGHTEN.
6. Remove OIL FILL CAP. Add recommended oil (see SPECIFICATIONS). DO NOT FILL ABOVE THE DIPSTICK "FULL" MARK. Crankcase oil capacity is 4.0 U.S. quarts (3.8 liters).

CAUTION

After refilling the crankcase with oil, always check oil level on dipstick. NEVER OPERATE ENGINE WITH OIL BELOW THE DIPSTICK "ADD" MARK.

7. Start engine and check for oil leaks.

◆ 4.5.11 CHANGING THE ENGINE AIR CLEANER

To replace the engine air cleaner, (part number 059402), simply remove the air cleaner cover and replace the air filter making sure it is positioned properly before reattaching the cover (Figure 4.1).

See the "Service Schedule," for air cleaner maintenance.

◆ 4.5.12 SPARK PLUGS

Reset the spark plug gap or replace the spark plugs as necessary. See Section 6.

1. Clean the area around the base of the spark plugs to keep dirt and debris out of the engine. Clean by scraping or washing using a wire brush and commercial solvent. Do not blast the spark plugs to clean.
2. Remove the spark plugs and check the condition. Replace the spark plugs if worn or if reuse is questionable. See the "Service Schedule," Section 6, for recommended inspection.
3. Check the spark plug gap using a wire feeler gauge. Adjust the gap to 0.5-0.6 mm (0.020-0.025 inch) by carefully bending the ground electrode (Figure 4.2).

Figure 4.2 – Setting the Spark Plug Gap

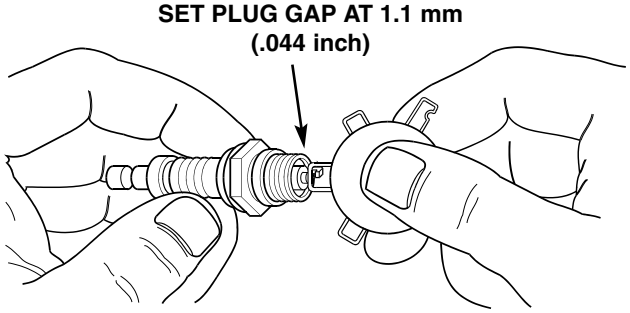

◆ 4.5.13 COOLANT CHANGE

Every year, have Authorized Service Facility drain, flush and refill the cooling system. See "Specifications" for cooling system recommendations.

4.6 MISCELLANEOUS MAINTENANCE

◆ 4.6.1 CLEANING THE GENERATOR

Keep the generator as clean and as dry as possible. Dirt and moisture that accumulates on internal generator windings have an adverse effect on insulation resistance.

Periodically clean generator exterior surfaces. A soft brush may be used to loosen caked on dirt. Use a vacuum system or dry, low pressure air to remove any accumulations of dirt. The generator is housed inside an all-weather enclosure, clean the enclosure with a soft, damp cloth or sponge and water.

Once each year have the generator cleaned and inspected by an Authorized Service Dealer. That dealer will use dry, low pressure air to clean internal windings. Parts inside the control console should be cleaned and inspected at this time as well.

Finally, have the insulation resistance of stator and rotor windings checked. If insulation resistances are excessively low, the generator may require drying.

◆ 4.6.2 BATTERY

All lead-acid storage batteries discharge when not in use. Refer to specific instructions and warnings that accompany the battery. If such information is not available, observe the following precautions when handling a battery:

- DO NOT use jumper cables and a booster battery to crank or start the generator engine.
- DO NOT recharge a weak battery while it is installed in the generator. Remove battery from generator and recharge in a well-ventilated area, away from fuel vapors, sparks, heat or flames.

- Battery electrolyte fluid is an extremely caustic sulfuric solution that can cause severe burns. DO NOT permit fluid to contact eyes, skin, clothing, painted surfaces, wiring insulation, etc. If any battery fluid is spilled, flush the affected area with clear water immediately.
- Always wear safety glasses, rubber apron and gloves when handling a battery.
- Batteries give off explosive hydrogen gas while charging. The gas can form an explosive mixture around the battery for several hours after charging. Any spark, heat or flames can ignite the gas and cause an explosion which can shatter the battery, causing blindness or other serious injury.

◆ 4.6.3 BATTERY MAINTENANCE

The battery should be inspected per Section 4.7, Scheduled Maintenance. The following procedure should be followed for inspection:

1. Inspect the battery posts and cables for tightness and corrosion. Tighten and clean as necessary.
2. Check the battery fluid level of unsealed batteries and, if necessary, fill with DISTILLED WATER ONLY. DO NOT USE TAP WATER IN BATTERIES.
3. Have the state of charge and condition checked. This should be done with an automotive-type battery hydrometer.

⚠ DANGER ⚠

Storage batteries give off explosive hydrogen gas. This gas can form an explosive mixture around the battery for several hours after charging. The slightest spark can ignite the gas and cause an explosion. Such an explosion can shatter the battery and cause blindness or other injury. Any area that houses a storage battery must be properly ventilated. Do not allow smoking, open flame, sparks or any spark producing tools or equipment near the battery.

Battery electrolyte fluid is an extremely caustic sulfuric acid solution that can cause severe burns. Do not permit fluid to contact eyes, skin, clothing, painted surfaces, etc. Wear protective goggles, protective clothing and gloves when handling a battery. If fluid is spilled, flush the affected area immediately with clear water.

Spilled electrolyte is to be washed down with an acid-neutralizing agent. A common practice is to use a solution of one pound (500 grams) bicarbonate of soda to one gallon (4 liters) of water. The bicarbonate of soda solution is to be added until the evidence of reaction (foaming) has ceased. The resulting liquid is to be flushed with water and the area dried.

Do not use any jumper cables or booster battery to crank and start the generator engine. If the battery has completely discharged, remove it from the generator for recharging.

⚠ WARNING ⚠

Be sure the AUTO/OFF/MANUAL switch is set to the OFF position, before connecting the battery cables. If the switch is set to AUTO or MANUAL, the generator can crank and start as soon as the battery cables are connected.

Be sure the utility power supply to the battery charger is turned off, or sparking may occur at the battery posts as the cables are attached and cause an explosion.

◆ 4.6.4 BATTERY REPLACEMENT

When replacing batteries, use the same number and the type of battery that follows:

BCI Group No.	CCA
26-60R	525 @ 0 deg. F

NOTE:

The BCI number should be located directly on the battery.

PERIODIC REPLACEMENT PARTS	
Part Name	**Generac's Part Number**
Oil Filter	Motorcraft FL-400-S (supplied with engine)
Radiator Cap	# 046627
Air Cleaner	# 059402
Spark Plug	Motorcraft AWSF-52-C (supplied with engine)
Battery	# 077483

4.7 SCHEDULED MAINTENANCE

Following is a recommended maintenance schedule for Generac small standby and residential generator sets. The established intervals in the schedule are the *maximum* recommended when the unit is used in an average service application. They will need to be decreased (performed more frequently) if the unit is used in a severe application. Use the unit hour meter or calendar time, whichever occurs first, from the previous maintenance interval to determine the next required maintenance interval.

Service Maintenance Interval Information:

The various service maintenance intervals are designated by interval numbers as follows:

1 An early inspection of the generator set to insure it is ready to operate when required and to identify any potential problem areas.

*Performed monthly or following each 10 hours of operation of the unit and requires approximately .**5 man-hours** per unit to complete.*

This inspection may be performed by the end user providing the following safety steps are taken to prevent the engine from starting automatically without warning:

To prevent injury, perform the following steps in the order indicated before starting any maintenance:

- **Disable the generator set from starting and/or connecting to the load by setting the control panel AUTO/OFF/MANUAL switch to the OFF position.**
- **Remove the 5 amp and 15 amp control panel fuses.**
- **Turn off the battery charger (turn OFF utility supply to ATS).**
- **Remove the negative battery cable.**

The battery charger must be turned off BEFORE removing the battery cable to prevent an over current condition from burning out sensitive control panel components and circuits.

Following all maintenance, reverse these steps to insure the unit is returned to standby setup for normal operation when required.

2 A break-in service inspection of the generator set to insure it is ready to operate and carry the load when required, and to identify any potential problem areas.

*Performed **ONLY ONCE** following the first three months or the first 30 hours of operation after purchase of the unit and requires approximately **2.5 man-hours** per unit to complete.*

This inspection contains some maintenance tasks which require special tools, equipment, and/or knowledge to accomplish and should be performed only by an authorized Generac Service Dealer.

3 An operational inspection of the generator set to insure it is ready to operate and carry the load when required, and to identify any potential problem areas.

*Performed semi-annually or following each 50 hours of operation of the unit and requires approximately **1.5 man-hours** per unit to complete.*

This inspection contains some maintenance tasks which require special tools, equipment, and/or knowledge to accomplish and should be performed only by an authorized Generac Service Dealer.

4 A mid-level inspection of the generator set to insure it is ready to operate and carry the load when required, and to identify any potential problem areas.

*Performed annually or following each 100 hours of operation of the unit and requires approximately **4.0 man-hours** per unit to complete.*

This inspection contains some maintenance tasks which require special tools, equipment, and/or knowledge to accomplish and should be performed only by an authorized Generac Service Dealer.

Maintenance Tasks	Level 1 Recom-mended to be done monthly/ 10 hrs.	Task Comp. (Date-Initials)	Level 2 Required to be done 3 months/ Break-in 30 hrs.	Task Comp. (Date-Initials)	Level 3 Required to be done Semi-annually/ 50 hrs.	Task Comp. (Date-Initials)	Level 4 Required to be done Annually/ 100 hrs.	Task Comp. (Date-Initials)
1. Disable the unit from operating per the first page warning.	●		●		●		●	
2. Check the engine oil level. Adjust as necessary.	●		●		●		●	
3. Check the engine coolant level. Adjust as necessary.	●		●		●		●	
4. Check the engine coolant thermal protection level. Correct as necessary.							●	
5. Check the natural gas delivery system on gas engine driven units. Tighten connections as necessary.			●		●		●	
6. Check the air inlets and outlets for debris. Clean as necessary.	●		●		●		●	
7. Check the battery electrolyte level if accessible. Adjust as necessary.	●		●		●		●	
8. Check the battery posts, cables, and charger for loose connections, corrosion, and proper operation. Correct as necessary.	●		●		●		●	
9. Check the unit wiring for loose connections, corrosion, and damage. Correct as necessary.							●	
10. Check the engine accessory drive belts for wear, weather cracking, and damage. Replace as necessary.							●	
11. Visually inspect the unit looking for leaks, wear or damage, loose connections or components, and corrosion. Correct as necessary.	●		●		●		●	
12. Test the engine and transfer switch safety devices. Correct and/or adjust as necessary.							●	

Maintenance Tasks	Level 1 Recom-mended to be done monthly/ 10 hrs.	Task Comp. (Date-Initials)	Level 2 Required to be done 3 months/ Break-in 30 hrs.	Task Comp. (Date-Initials)	Level 3 Required to be done Semi-annually/ 50 hrs.	Task Comp. (Date-Initials)	Level 4 Required to be done Annually/ 100 hrs.	Task Comp. (Date-Initials)
13. Initiate an automatic start and transfer of the unit to site load and exercise it for at least 1 hour looking for leaks, loose connections or components, and abnormal operating conditions. Correct as necessary.			●		●			
14. Start and exercise the unit at full rated load (use a load bank if the site load is not enough) for at least 2 hours looking for leaks, loose connections or components, and abnormal operating conditions. Correct as necessary.							●	
15. Change the engine oil.			●				●	
16. Replace the engine oil filter(s).			●				●	
17. Replace the engine air filter(s).							●	
18. Replace the engine fuel filter(s) on diesel engine driven units and re-prime the fuel system.			●				●	
19. Check the engine spark plugs on gas engine driven units. Clean and re-gap or replace as necessary.			●				●	
20. Perform a 5 minute no-load operational run of the unit looking for any post service problems.			●				●	
21. Return the unit to standby setup for operation when required.	●		●		●		●	

TROUBLESHOOTING POINTS

PROBLEM	CAUSE	CORRECTION
Engine won't crank.	1. 15 amp fuse blown. 2. Loose or corroded or defective battery cables. 3. Defective starter contactor. 4. Defective starter motor. 5. Dead or Defective Battery. 6. 5 amp fuse blown.	1. Replace fuse. 2. Tighten, clean or replace battery cables as necessary. 3. Replace contactor. 4. Replace starter motor. 5. Remove, change or replace battery. 6. Replace fuse.
Engine cranks but won't start	1. Out of fuel. 2. Fuel solenoid (FS) is defective 3. Open Wire #14A from Engine Control circuit board. 4. Spark plugs defective.	1. Replenish fuel. 2. Replace solenoid. 3. Reconnect wire. 4. Clean, regap or replace plugs.
Engine starts hard, runs rough.	1. Flame arrestor (air cleaner) plugged or damaged. 2. Plugged fuel line. 3. Defective spark plugs.	1. Clean or replace as needed. 2. Unclog fuel line. 3. Clean, regap or replace plugs.
Engine starts then shuts down.	1. Engine oil level is low. 2. Engine is overheated. 3. Defective Low Oil Pressure Switch 4. Defective Coolant Temperature Switch 5. Defective Control Module circuit board. 6. Coolant Level is Low. 7. Defective Low Coolant Level Switch	1. Check oil and add oil as needed. 2. Check cooling system for leaks. 3. Replace switch. 4. Replace switch. 5. Replace board. 6. Repair leak - Add coolant. 7. Replace Switch.
AUTO/OFF/MANUAL Switch at OFF, engine continues to run	1. Defective AUTO/OFF/MANUAL switch 2. Open/disconnected wire #15A between AUTO/OFF/MANUAL switch and Control Module circuit board. 3. Defective Control Module circuit board	1. Replace switch. 2. Reconnect/close wire. 3. Replace board.
No AC output from generator.	1. Main line circuit breaker open. 2. Circuit breakers & fuses open. 3. Transfer switch set to NORMAL position 4. Generator internal failure. 5. Thermal circuit breaker open.	1. Reset to ON or CLOSED. 2. Reset and replace, if necessary. 3. Set to GENERATOR position. 4. Contact an Authorized Generac facility. 5. Auto-reset - Wait 5 min. and attempt restart.

Generac Liquid-cooled 25 kW Generator
Wiring Diagram — 2.5L Engine (Model 004990-0) —Drawing No. 0E9982-B

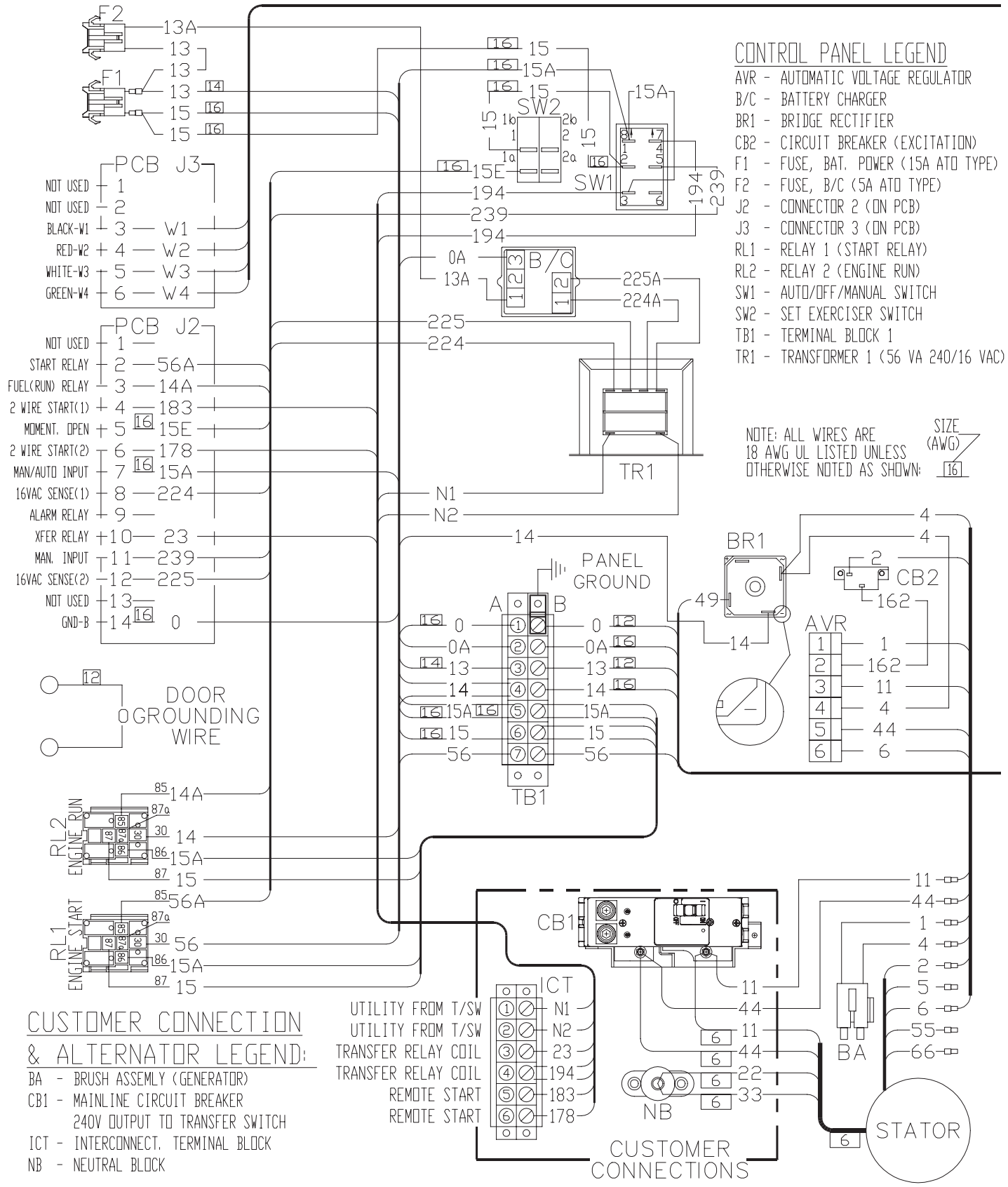

Generac Liquid-cooled 25 kW Generator
Wiring Diagram — 2.5L Engine (Model 004990-0) —Drawing No. 0E9982-B

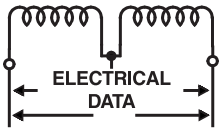

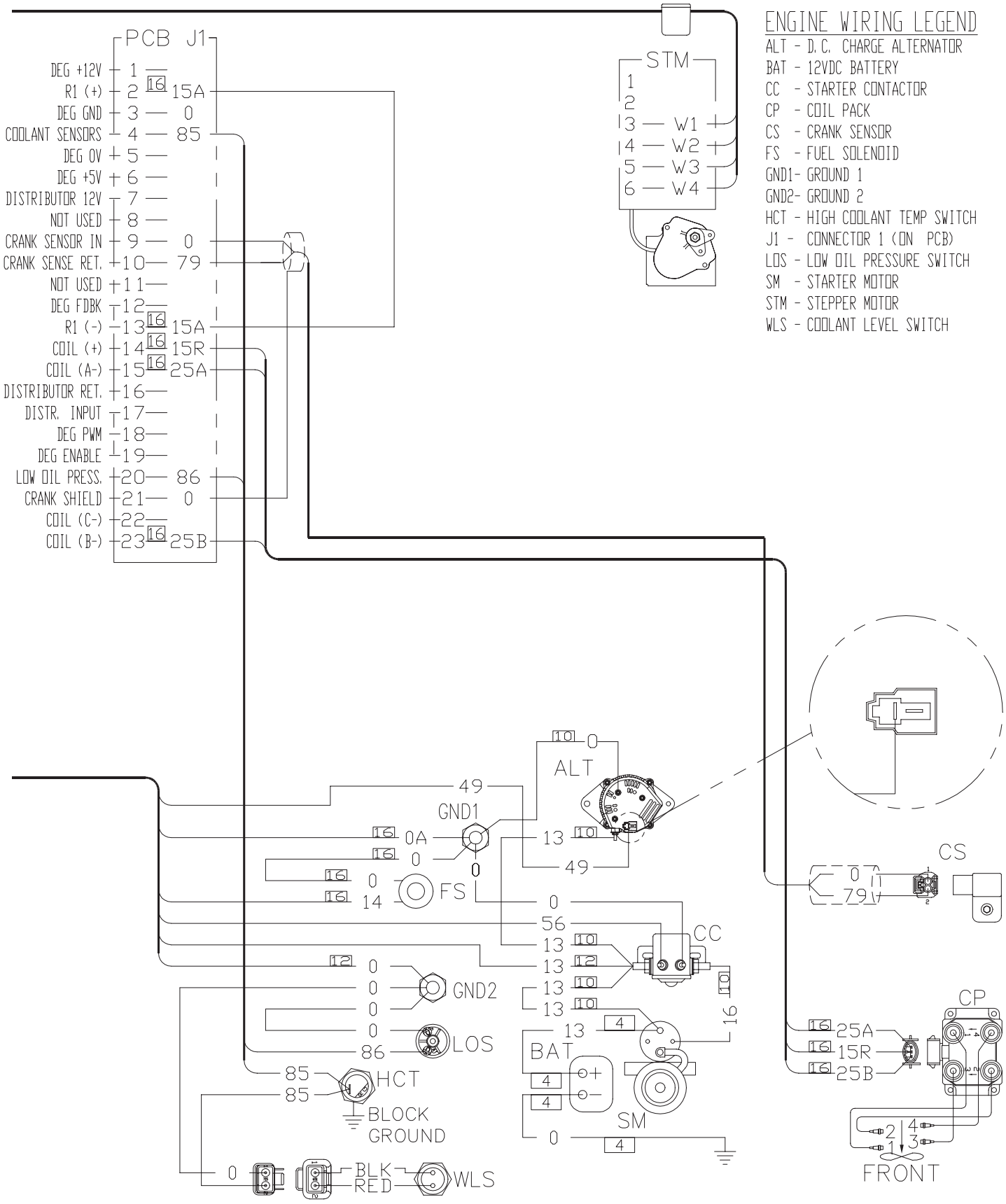

Generac Liquid-cooled 25 kW Generator
Electrical Schematic — 2.5L (Model 004990-0) — Drawing No. 0E9983-B

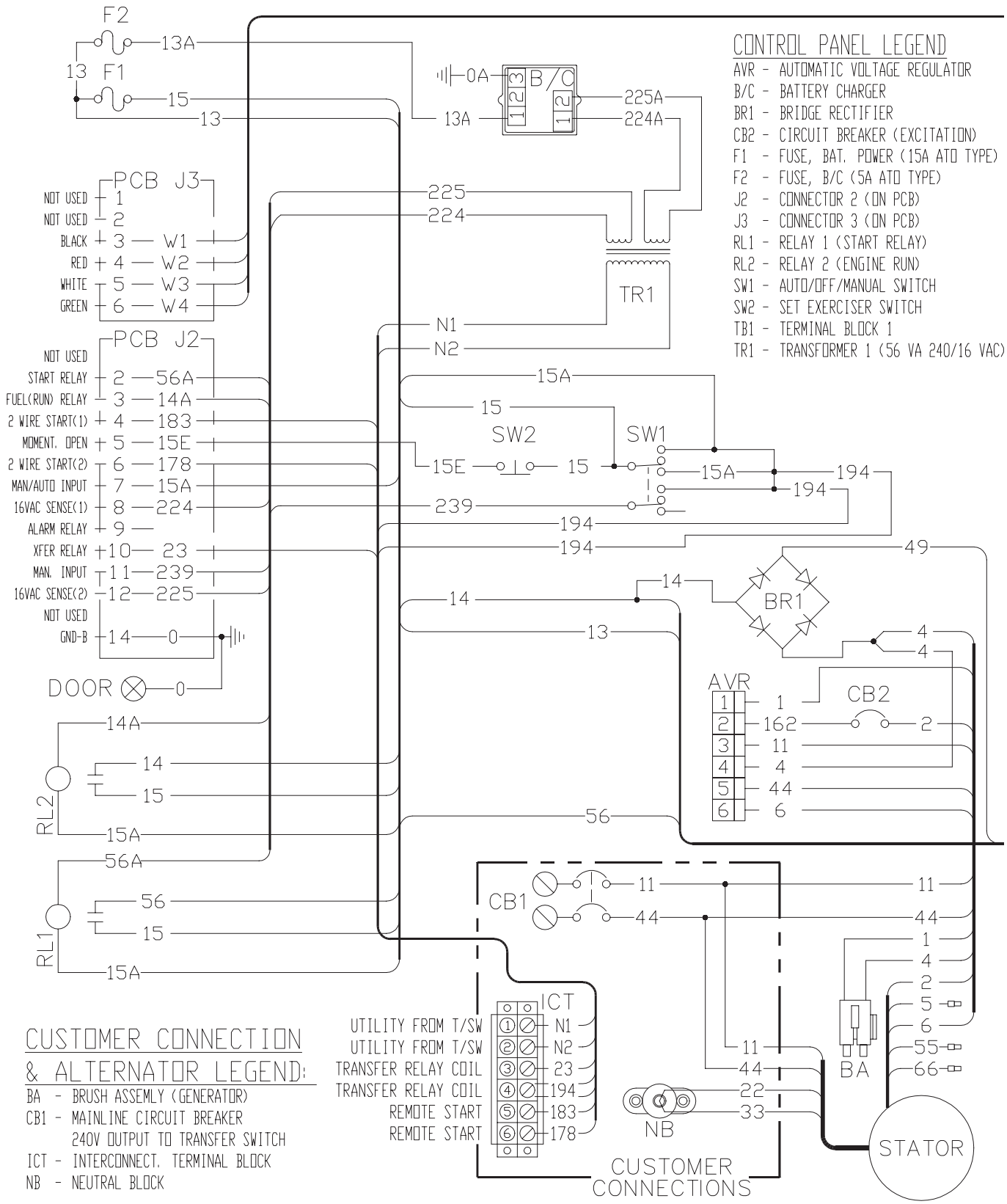

Generac Liquid-cooled 25 kW Generator
Electrical Schematic — 2.5L (Model 004990-0) — Drawing No. 0E9983-B

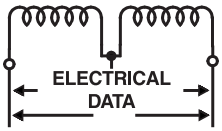

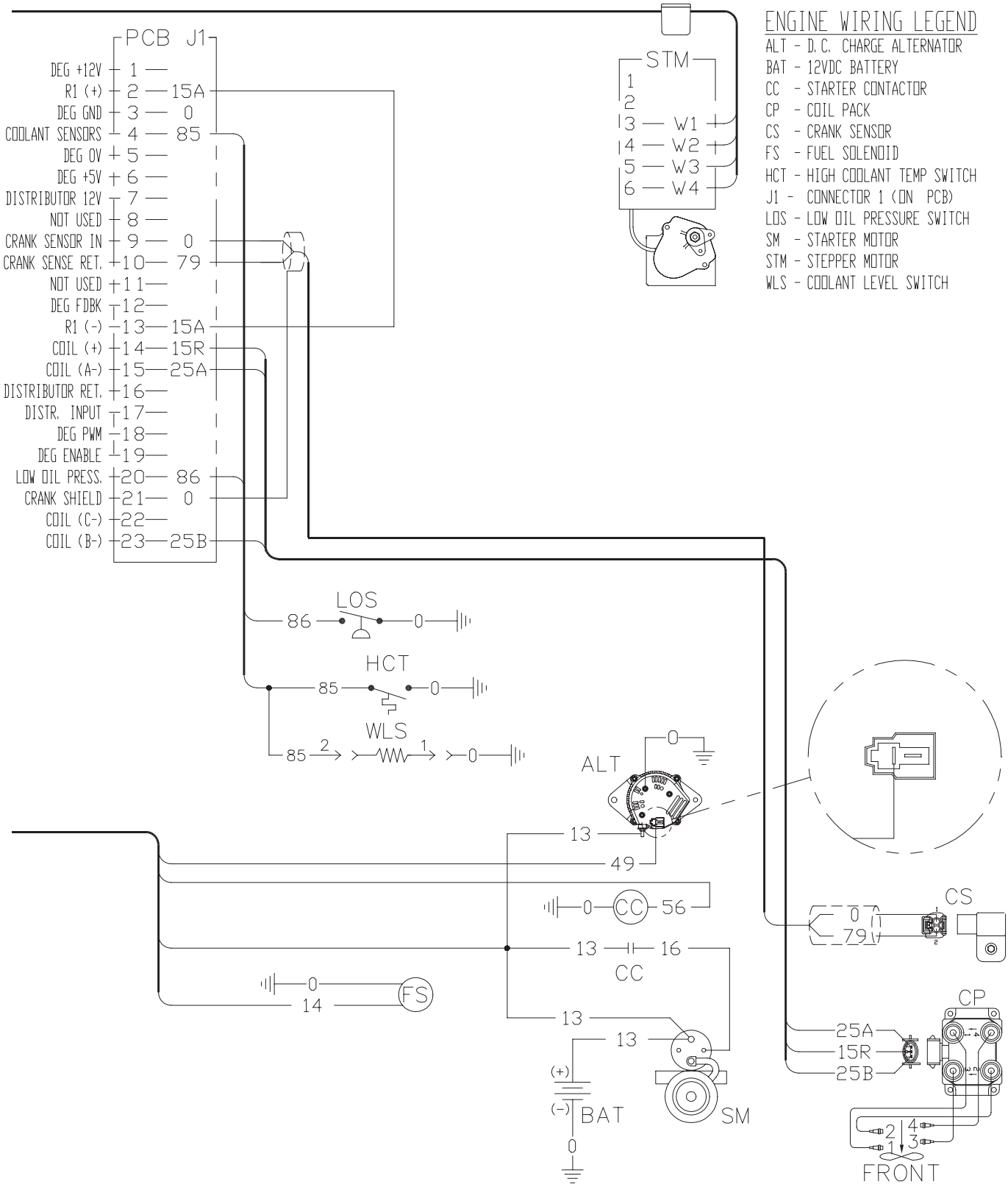

Generac Liquid-cooled 25 kW Generator
Wiring Diagram — 2.5L Engine (Model 005078-0) —Drawing No. 0F2452

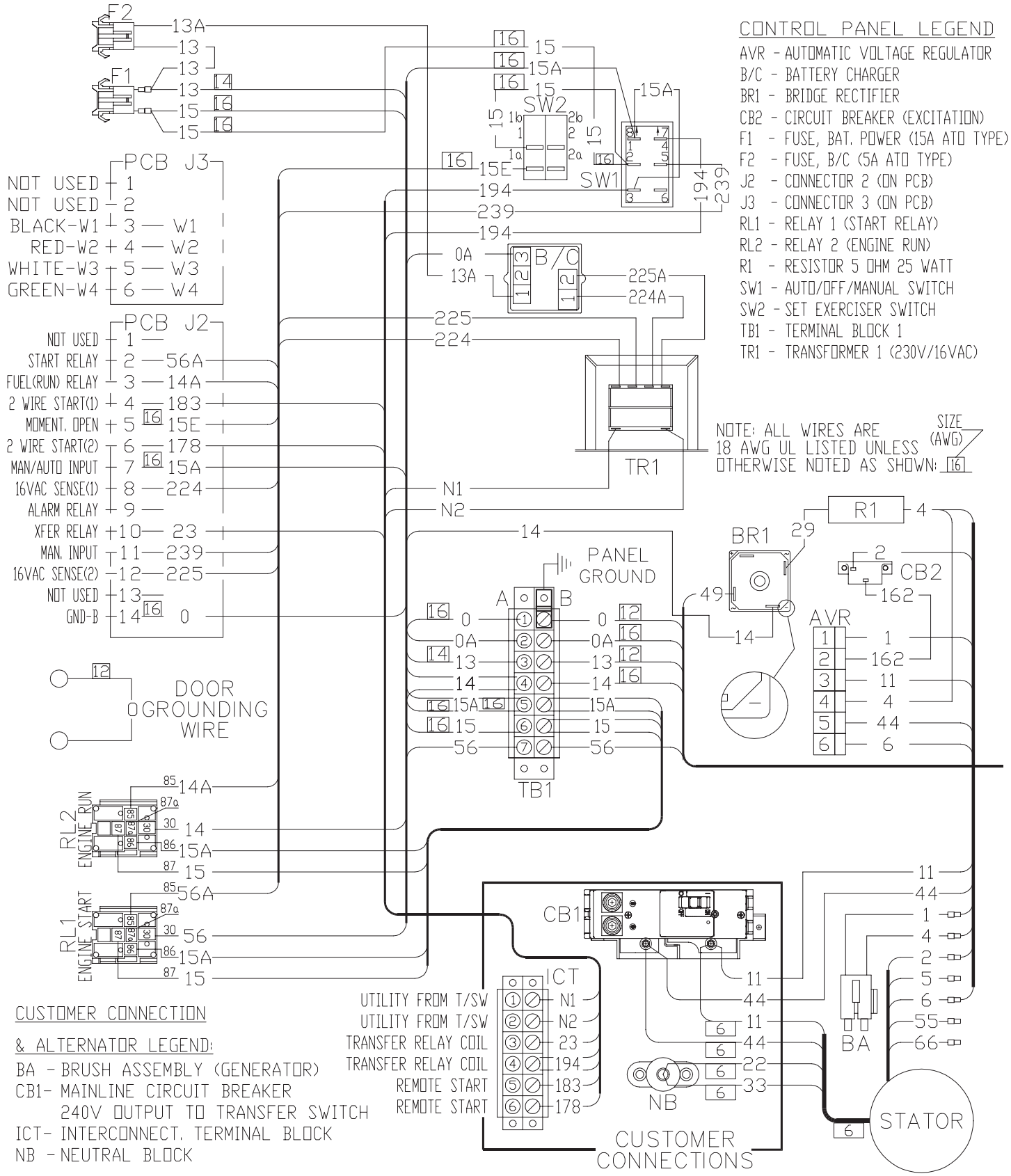

Generac Liquid-cooled 25 kW Generator
Wiring Diagram — 2.5L Engine (Model 005078-0) —Drawing No. 0F2452

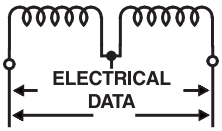

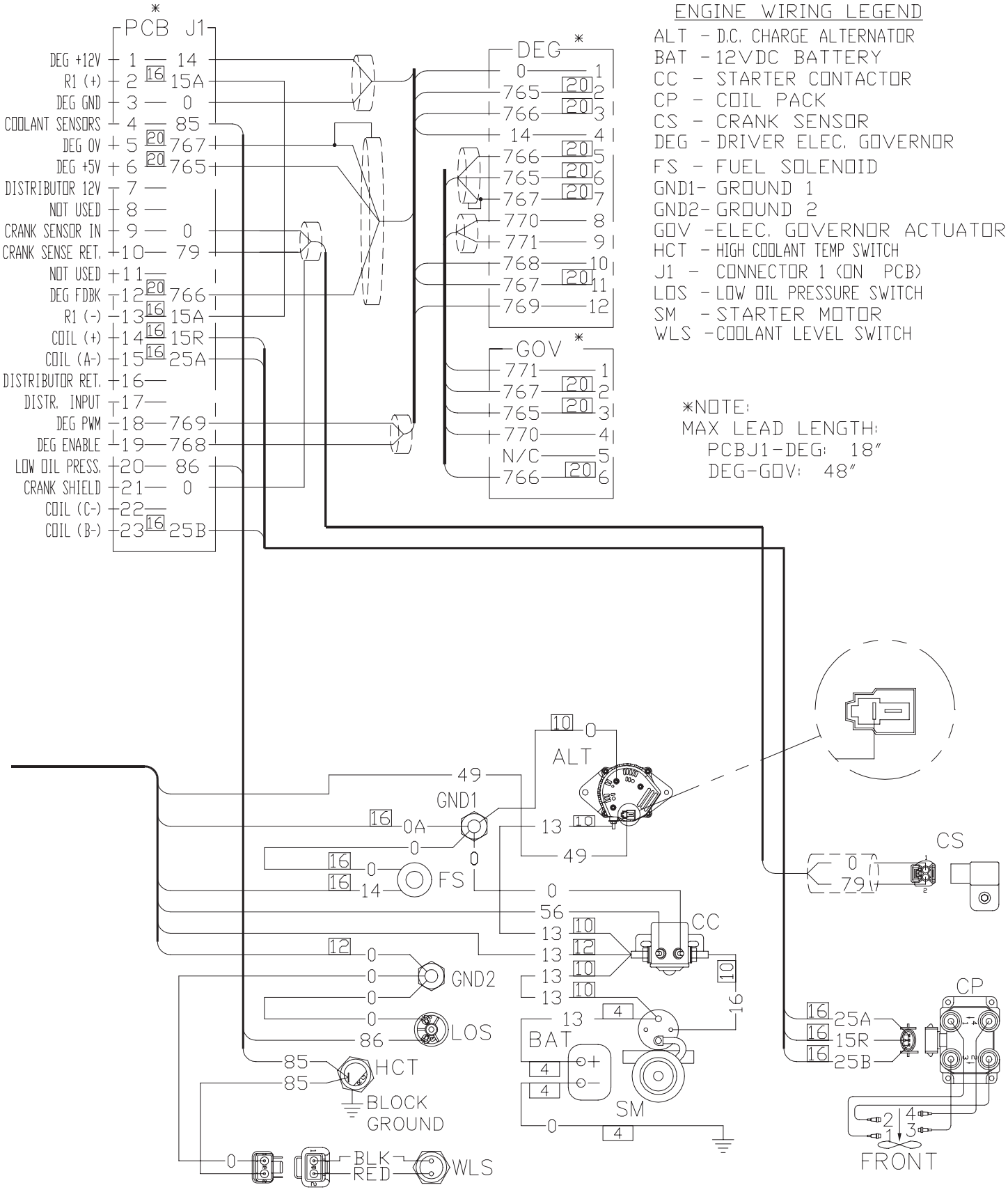

Generac Liquid-cooled 25 kW Generator
Wiring Diagram — 2.5L Engine (Models 005048-0 & 005052-0) —Drawing No. 0F1411

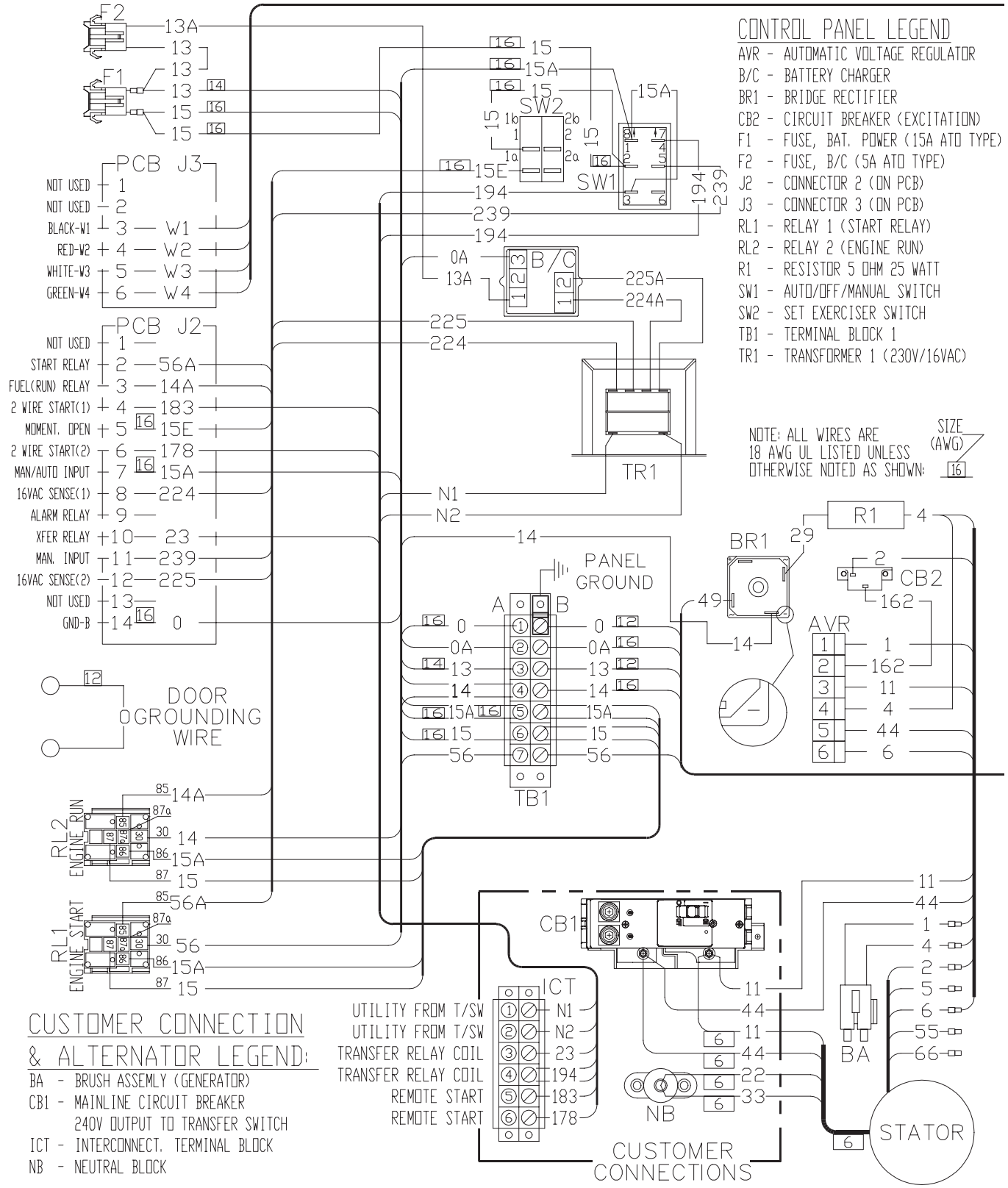

Generac Liquid-cooled 25 kW Generator
Wiring Diagram — 2.5L Engine (Models 005048-0 & 005052-0) —Drawing No. 0F1411

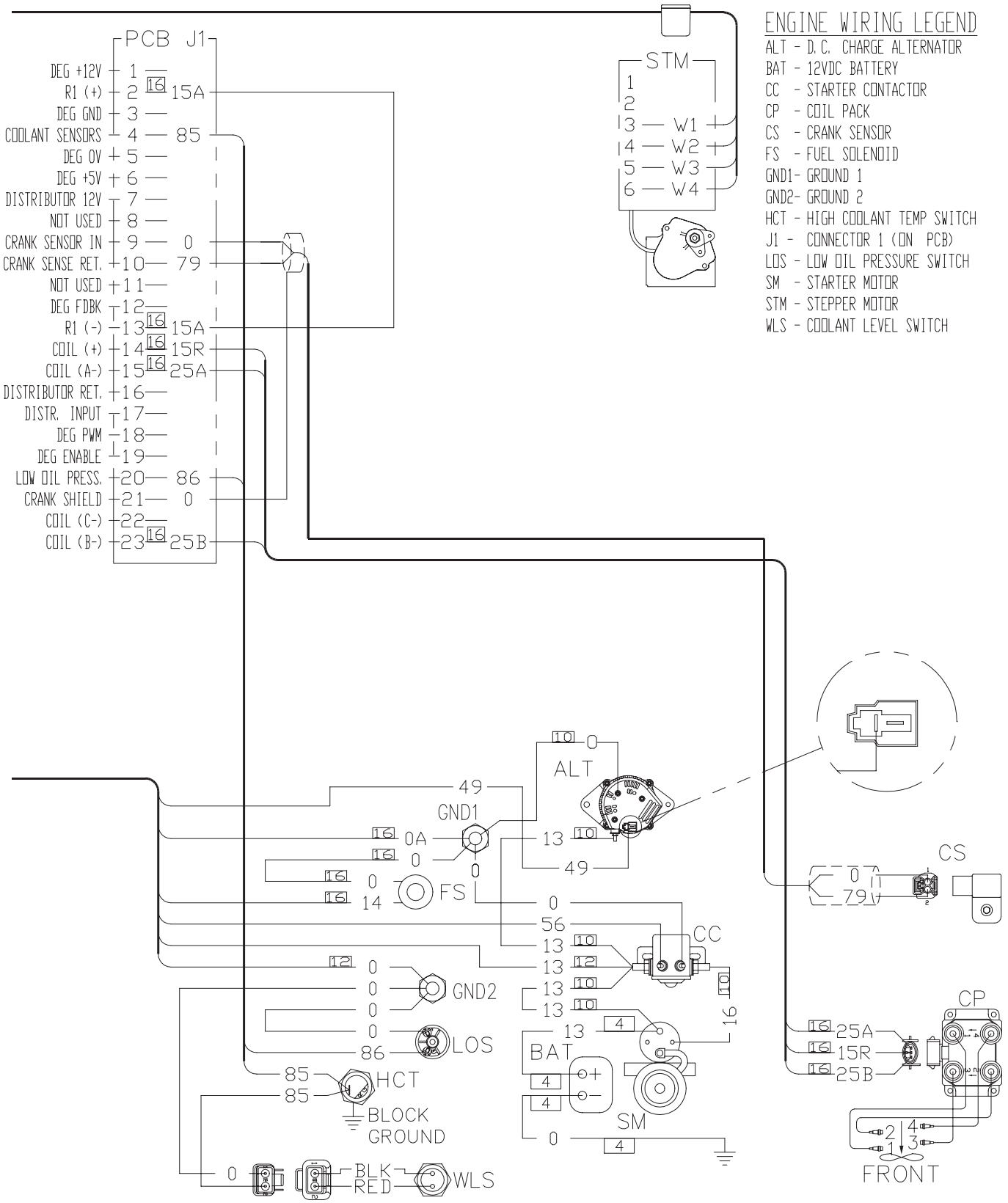

Generac Liquid-cooled 25 kW Generator
Electrical Schematic — 2.5L Engine (Models 005048-0 & 005052-0) —Drawing No. 0F1413

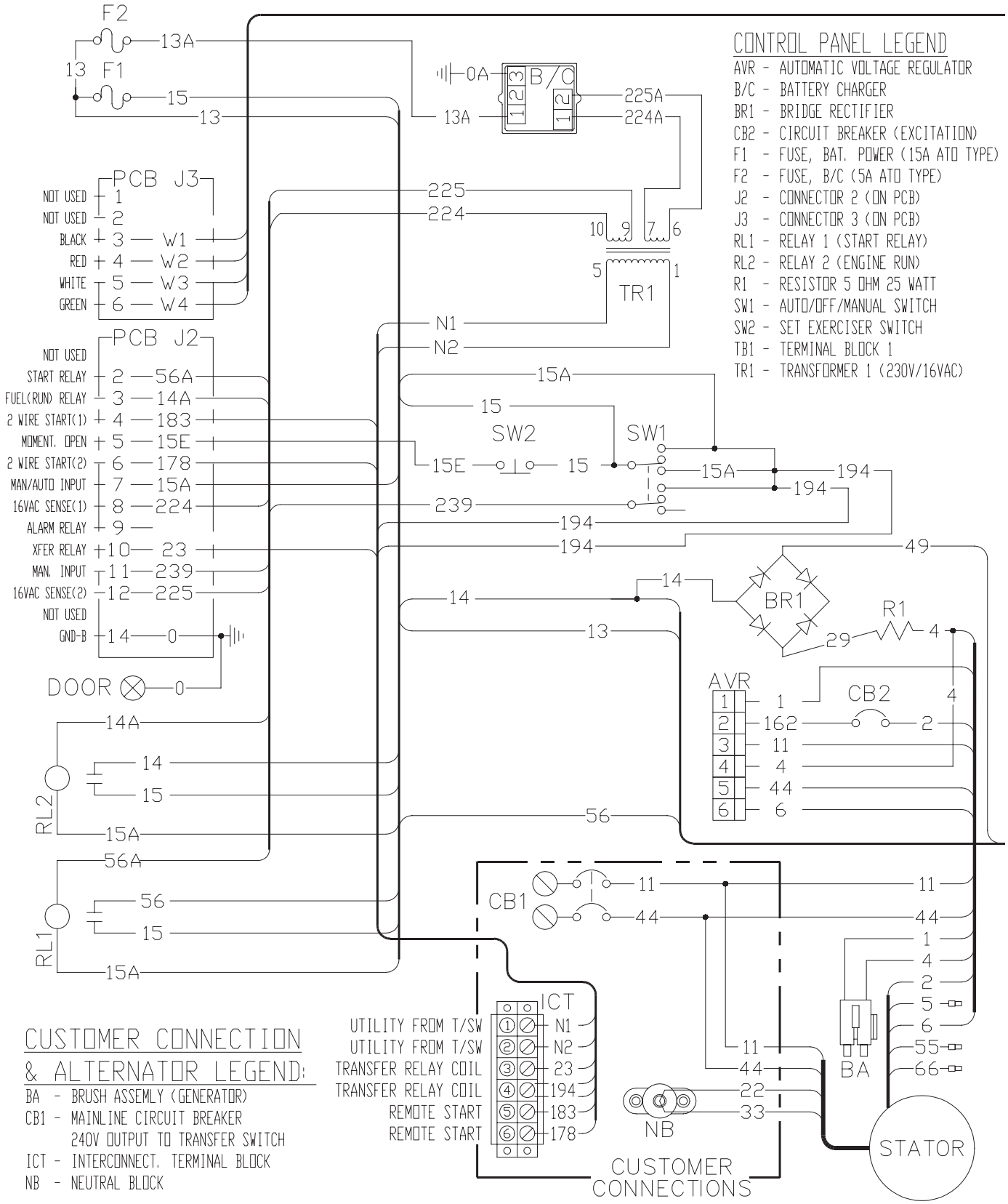

Generac Liquid-cooled 25 kW Generator

Electrical Schematic — 2.5L Engine (Models 005048-0 & 005052-0) —Drawing No. 0F1413

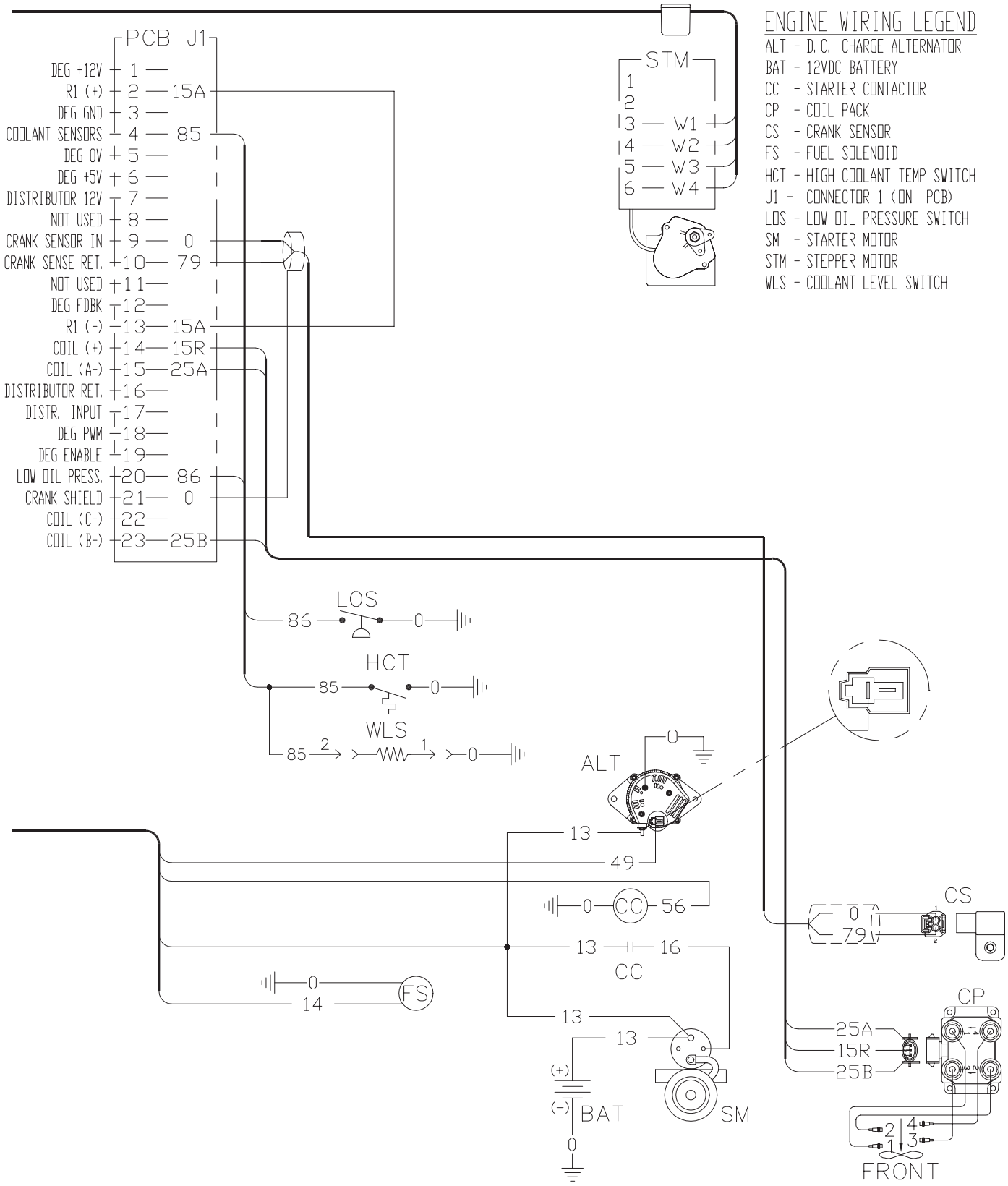

Generac Liquid-cooled 25 kW Generator
Mounting Base — Drawing No. 0E9964-D

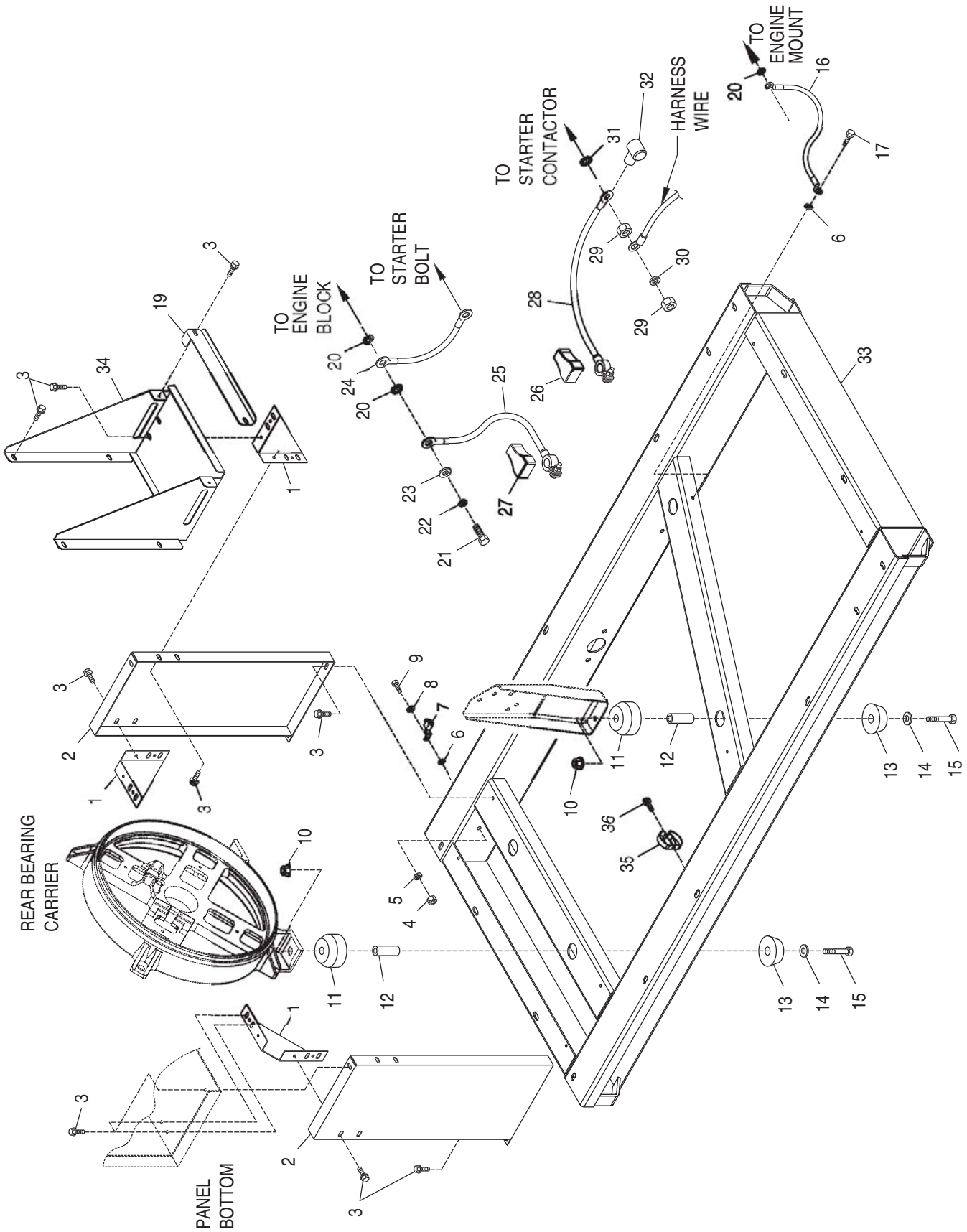

Generac Liquid-cooled 25 kW Generator
Mounting Base — Drawing No. 0E9964-D

ITEM	PART NO.	QTY.	DESCRIPTION
1	0D9336	3	PANEL BRACKET
2	0E9939	2	CTRL PNL SUPPORT 2.5L FORD
3	0C2454	24	SCREW TH-FRM M6-1 X 16 N WA Z/JS
4	049813	1	NUT HEX M6 X 1.0 G8 YEL CHR
5	022097	1	WASHER LOCK M6-1/4
6	026850	2	WASHER SHAKEPROOF EXT 1/4 STL
7	055414	1	LUG SLDLSS #2-#8 X 17/64 CU
8	022473	1	WASHER FLAT 1/4-M6 ZINC
9	047411	1	SCREW HHC M6-1.0 X 16 G8.8
10	052860	4	NUT FLANGED HEX M12-1.75
11	052251	4	DAMPENER VIBRATION 40 BLUE
12	052257	4	SPACER .49 X .62 X 1.87 PWDR/ZNC
13	052252	4	DAMPENER VIBRATION
14	052259	4	WASHER FLAT M12
15	052891	4	SCREW HHC M12-1.75 X 80 G8.8
16	0536210261	1	ASSY WIRE #0 12.00"
17	074906	1	SCREW HHTT M6-1.0 X 20 BP
18	077483	REF	BATT 12VDC 75-AH 26 (NOT SHOWN)
19	0E9941	1	HOLD DOWN BATTERY 2.5L FORD
20	025507	3	WASHER SHAKEPROOF EXT 7/16 STL
21	059980	1	SCREW HHC M10-1.5 X 25 G10.9
22	046526	1	WASHER LOCK M10
23	022131	1	WASHER FLAT 3/8-M10 ZINC
24	021991	1	EARTH STRAP
25	038805G	1	CABLE BATT BLK #1 X 41.50
26	050331	REF	BATTERY POST COVER (BLACK)
27	050331A	REF	BATTERY POST COVER (RED)
28	038804J	1	CABLE BATT RED #1 X 40.50
29	045771	REF	NUT HEX M8-1.25 G8 YEL CHR
30	022129	REF	WASHER LOCK M8-5/16
31	027482	1	WASHER SHAKEPROOF EXT 5/16 STL
32	075763	1	BOOT BATTERY CABLE
33	0E9748	1	ASSY MTG BASE 2.5L FORD
34	0E9940	1	TRAY BATTERY 2.5L FORD
35	065852	1	SPRING CLIP HOLDER .37-.62
36	024469	1	SCREW HHTT #10-32 X 3/8 CZ

Generac Liquid-cooled 25 kW Generator Enclosure — Drawing No. 0E9720-C

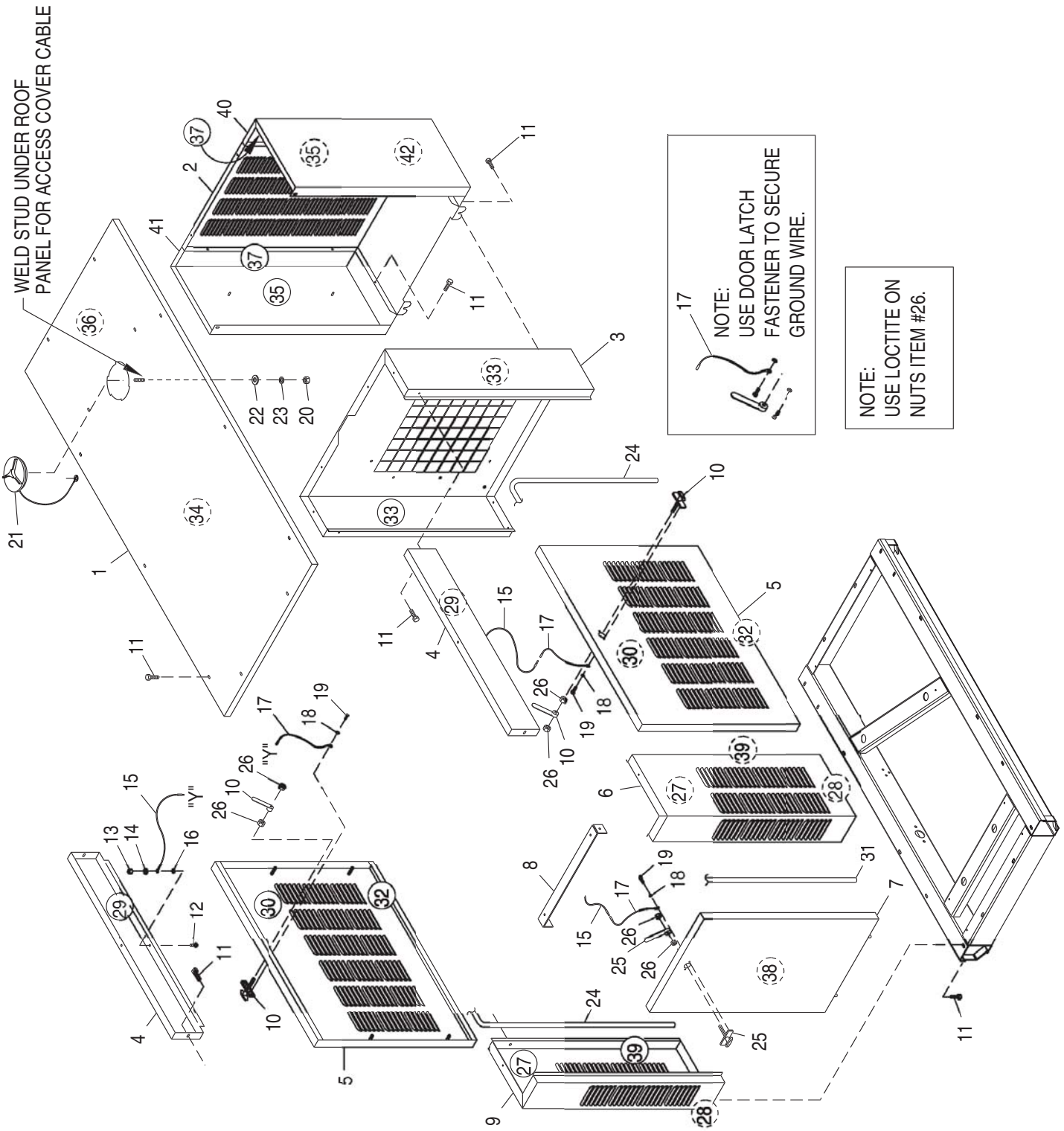

Generac Liquid-cooled 25 kW Generator
Enclosure — Drawing No. 0E9720-C

ITEM	PART NO.	QTY.	DESCRIPTION
1	0E9768	1	ROOF ACO & STD ENCL 2.5L
2	0E9862	1	DUCT, DISCHARGE MID 2.5L
3	0E9769	1	SUPPORT,RADIATOR 2.5L FORD
4	0D8660	2	BRACE SIDE 1.5L MITSU
5	0A7568	2	DOORWELDMENT 1.5EPS
6	0E9771	1	CORNER POST,REAR RH SIDE 2.5L
7	0E9773	1	DOOR REAR ENCL 2.5L FD
8	0E9772	1	BRACE, REAR 2.5L FORD
9	0E9770	1	CORNER POST,REAR LH SIDE 2.5L
10	067042	2	LATCH & CAM
11	0C2454	34	SCREW TH-FRM M6-1X16 N WA Z/JS
12	033530	3	SCREW PHM #10-32 X 5/8 ZINC
13	051716	3	NUT HEX M5-0.8 G8 YEL CHR
14	022152	3	WASHER LOCK #10
15	0912970064	3	ASSEMBLY BASE-DOOR GROUND WIRE
16	023762	3	WASHER SHAKEPROOF EXT #10 STL
17	0912970063	3	GRD WIRE ASS'Y 99HSB
18	022264	6	WASHER LOCK #8-M4
19	067035	6	SCREW PPHM #8-32 X 5/16
20	022127	1	NUT HEX 1/4-20 STEEL
21	0C2634A	1	ASSEMBLY COVER ACCESS
22	022473	1	WASHER FLAT 1/4 ZINC
23	022097	1	WASHER LOCK M6-1/4
24	0D2023	2	GASKET CLIP-ON SELF GRIPPING (89"LG)
25	0C2164	1	LATCH AND CAM
26	037337	6	NUT HEX JAM 3/8-24 SS
27	0E0072G	2	ACSTC INSLTN 1.5L RR CRNR TOP
28	0E0072J	2	ACSTC INSLTN 1.5L RR CRNR BOTT
29	0E0072L	2	ACSTC INSLTN 1.5L SIDE BRC PNL
30	0E0072M	2	ACSTC INSLTN 1.5L SIDE DR PNL
31	0D2023	1	TRIM VINYL SELF GRIPPING (80"LG)
32	0E0072P	2	ACSTC INSLTN 1.5L SIDE DR PNL
33	0E0072Q	2	ACSTC INSLTN 1.5L RAD SUPPORT
34	0E0072S	1	ACSTC INSLTN 2.5L ROOF
35	0E0072T	2	ACSTC INSLTN 2.5L DUCT L&RH SD
36	0E0072U	1	INSUL ACO 2.5L EXH ROOF PANEL
37	0E0072V	2	ACSTC INSLTN 2.5L DUCT FRNT SD
38	0E0072W	1	ACSTC INSLTN 2.5L REAR DOOR
39	0E0072X	2	ACSTC INSLTN 2.5 RR CRNR PNL S
40	0E9861	1	DUCT, DISCHARGE RH SIDE 2.5L
41	0E9860	1	DUCT, DISCHARGE LH SIDE 2.5L
42	0C4334F	1	KAOWOOL MUFFLER COMPARTMENT

Generac Liquid-cooled 25 kW Generator
Control Panel (Model 004990-0) — Drawing No. 0E9719-E

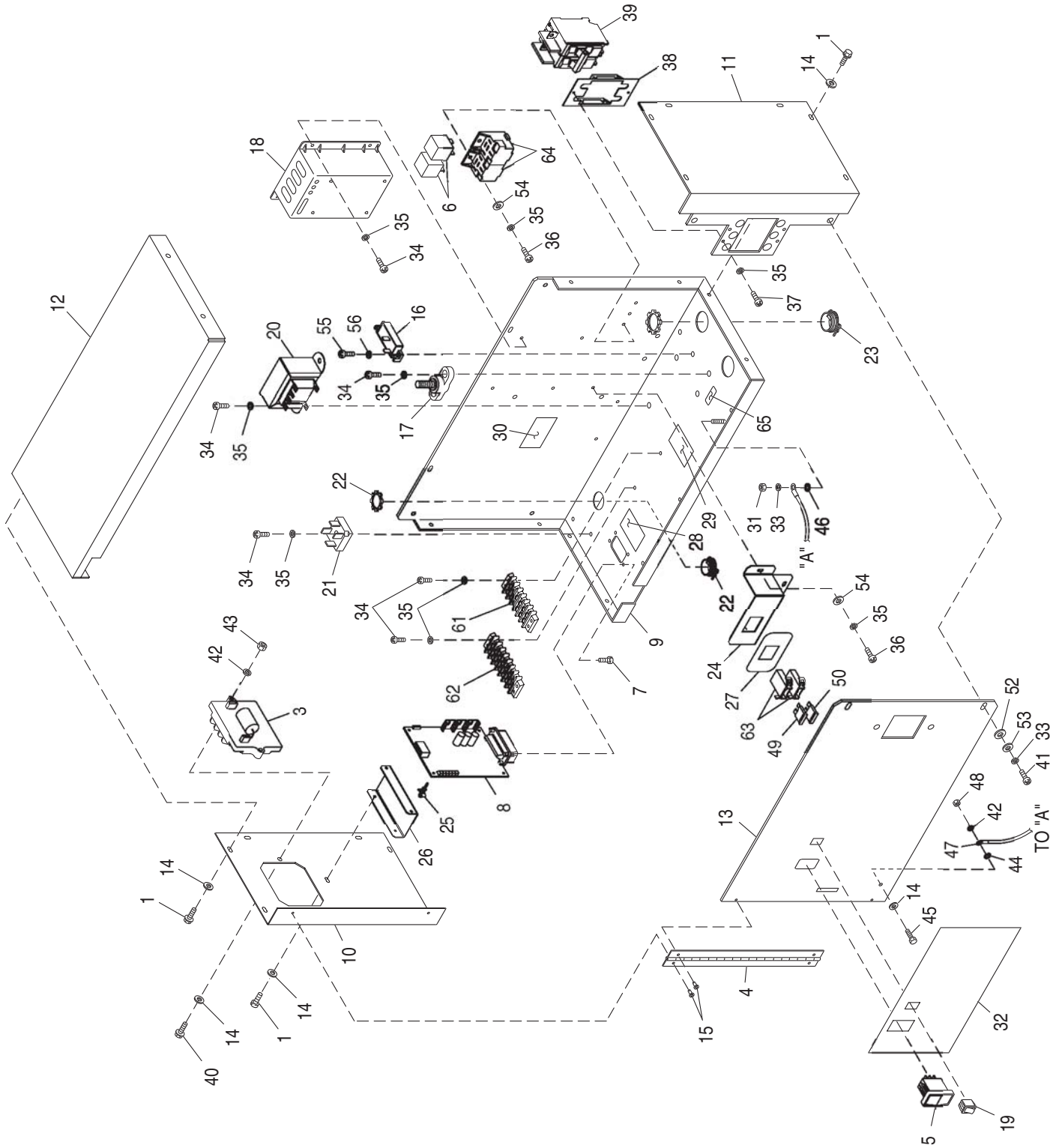

Generac Liquid-cooled 25 kW Generator
Control Panel (Model 004990-0) — Drawing No. 0E9719-E

ITEM	PART NO.	QTY.	DESCRIPTION
1	0C2267	16	SCREW HHTT M5-0.8 X 12 BP
3	0D5070A	1	ASSY 2A 12V UL BATTERY CHARGER
4	0D8671	1	HINGE CONTINUOUS 1.5L CTRL PNL
5	0E4494	1	SWITCH ROC DPDT ON-OFF-ON
6	0E6875A	2	RELAY, 12VDC C FORM W/DIODE
7	0E7358	4	SCREW PPPH HI-LO #4-24 X 3/8
8	0E9704	1	ASSY PCB HSB CONTROLLER 2.5L
9	0E9934	1	CTRL PNL BACK & BOTTOM 2.5L
10	0E9935	1	CTRL PNL LH SIDE 2.5L FORD
11	0E9936	1	CTRL PNL RH SIDE 2.5L FORD
12	0E9937	1	CTRL PNL TOP 2.5L FORD
13	0E9938	1	CTRL PNL FRONT 2.5L FORD
14	023897	19	WASHER FLAT #10 ZINC
15	036261	4	RIVET POP .125 X .275 AL
16	054450	1	CIRCT BRK 5.5 X 1 ETA 46-500-P
17	057073	1	JUNCTION BLOCK 3/8-16
18	067680	1	ASSY VOLTAGE REGULATOR 60HZ
19	082573	1	SWITCH ROC DPST 125V SPD
20	0C3910	1	TRANSFORMER 240/16V 1VA & 56VA
21	029673	1	DIO BRIDGE 25A 600V
22	034616	1	FITTING STRAIGHT 3/4
23	0E2514	1	FITTING CONDUIT STR 1-1/2"
24	0F0581	1	BRACKET FUSE HOLDER 2.5L FORD
25	040213	2	PCB SUPPORT SNAP-IN 1/4"
26	0F0558	1	BRACKET PCB SUPPORT 2.5L FORD
27	0F0598	1	DECAL FUSES 2.5L CNTRL PANEL
28	0F0599	1	DECAL TB1 2.5L CONTROL PANEL
29	0F0600	1	DECAL ICT 2.5L CONTROL PANEL
30	054199	1	DECAL DANGER HIGH VOLTAGE
31	049813	1	NUT HEX M6 X 1.0 G8 YEL CHR
32	0F0653	1	DECAL CONTROL HSB 2.5L FORD
33	022097	3	WASHER LOCK M6-1/4
34	0C2212	13	SCREW PHTT M4-0.7 X 16 ZYC
35	022264	20	WASHER LOCK #8-M4
36	0C2265	5	SCREW PHTT M4-0.7 X 12 ZYC
37	023965	2	SCREW RHM #8-32 X 3/8
38	039782	1	BRKT MTG CB BQ
39	0A2077	1	CB 0125A 2P 240V S BQ2 LL
40	020911	2	SCREW PPHM M5-0.8 X 30 ZINC
41	0A8955	2	SCREW PHM M6-1.0 X 20MM
42	022152	3	WASHER LOCK #10
43	051716	2	NUT HEX M5-0.8 G8 YEL CHR
44	023762	1	WASHER SHAKEPROOF EXT #10 STL
45	033121	1	SCREW HHC #10-32 X 1/2
46	026850	1	WASHER SHAKEPROOF EXT 1/4 STL
47	0912970087	1	ASSY WIRE 14AWG 16" #0 GRN/YEL
48	022158	1	NUT HEX #10-32 STEEL
49	0E7403C	1	FUSE ATO TYPE 15 AMP (BLUE)
50	0E7403A	1	FUSE ATO TYPE 5 AMP (TAN)
51	0F0526	1	HARN CTRL PNL 2.5L FD (NOT SHOWN)
52	0A2115	2	WASHER NYLON .257
53	022473	2	WASHER FLAT 1/4-M6 ZINC
54	038150	5	WASHER FLAT #8 ZINC
55	0C2428	2	SCREW PHTT #6-32 X 1/2 ZYC
56	022155	2	WASHER LOCK #6
57 *	052619	2	SCREW HHC M5-0.8 X 20 G8.8
58 *	023897	4	WASHER FLAT #10 ZINC
59 *	049226	2	WASHER LOCK M5
60 *	051716	2	NUT HEX M5-0.8 G8 YEL CHR
61 **	046357	REF	BLOCK TERM 20A 6 X 6 X 1100V
62 **	047822	REF	BLOCK TERM 20A 7 X 6 X 1100V
63 **	0F1467	REF	ASSY WIRE FUSE HOLDER
64 **	0E6881	REF	SOCKET RELAY
65	0A9457	1	DECAL NEUTRAL

* NOT SHOWN. HARDWARE FOR ATTACHING WIRES TO I/N 39.

** PART OF I/N 51, P/N 0F0526 CONTROL PANEL HARNESS.

Generac Liquid-cooled 25 kW Generator
Control Panel (Models 005048-0 & 005052-0) — Drawing No. 0F1378-D

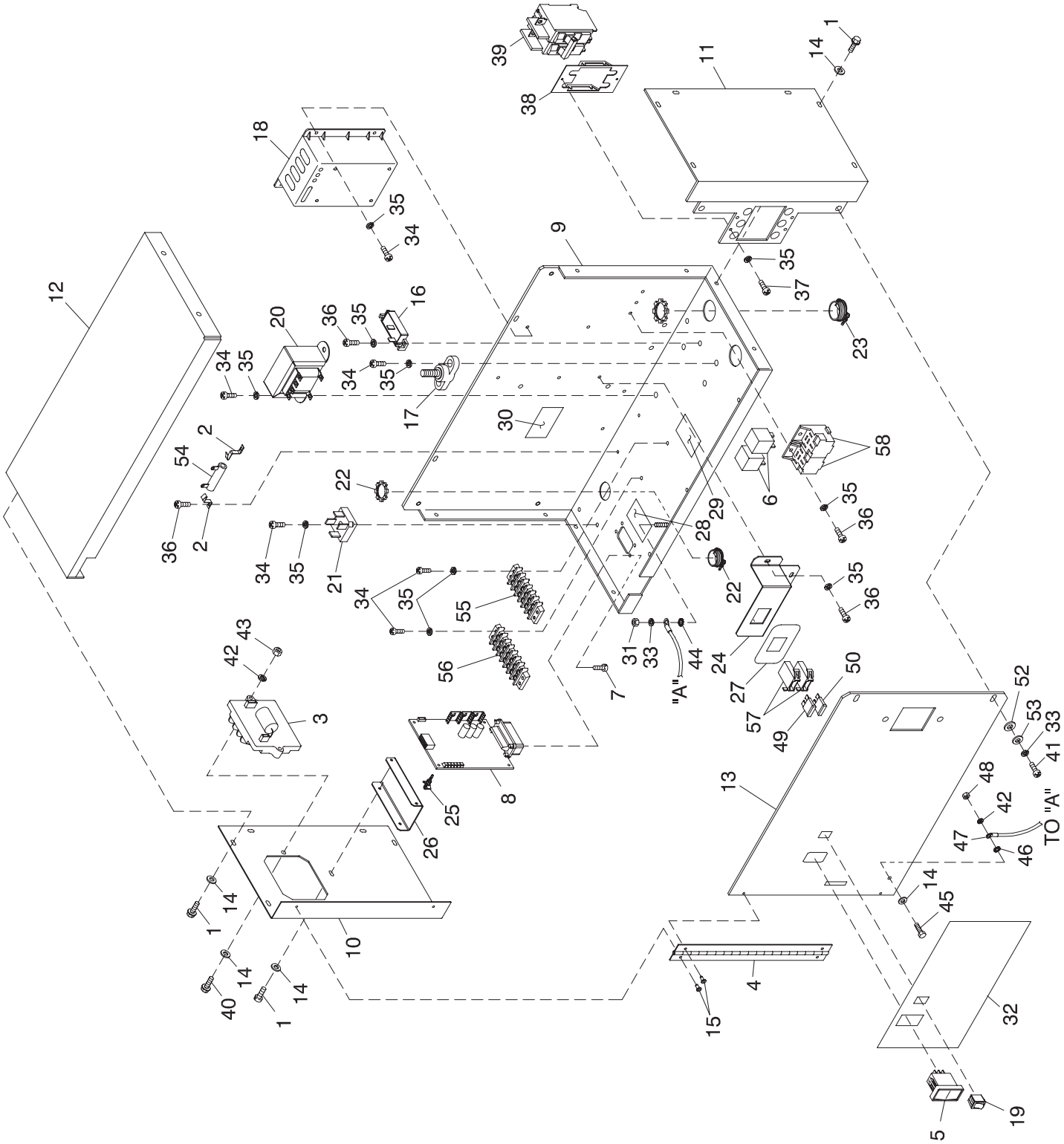

Control Panel (Models 005048-0 & 005052-0) — Drawing No. 0F1378-D

ITEM	PART NO.	QTY.	DESCRIPTION
1	0C2267	16	SCREW HHTT M5-0.8 X 12 BP
2	064733	2	RES MTG BRACKET
3	0D5070A	1	ASSY 2A 12V UL BATTERY CHARGER
4	0D8671	1	HINGE CONTINUOUS 1.5L CTRL PNL
5	0E4494	1	SWITCH ROC DPDT ON-OFF-ON
6	0E6875A	2	RELAY 12VDC C FORM W/DIODE
7	0E7358	4	SCREW PPPH HI-LO #4-24 X 3/8
8	0E9704	1	ASSY PCB HSB CONTROLLER 2.5L
9	0E9934	1	CTRL PNL BACK & BOTTOM 2.5L
10	0E9935	1	CTRL PNL LH SIDE 2.5L FORD
11	0E9936	1	CTRL PNL RH SIDE 2.5L FORD
12	0E9937	1	CTRL PNL TOP 2.5L FORD
13	0E9938	1	CTRL PNL FRONT 2.5L FORD
14	023897	19	WASHER FLAT #10 ZINC
15	036261	4	RIVET POP .125 X .275 AL
16	048468	1	CIRCT BRK 8 X 1 ETA 46-500-P
17	057073	1	JUNCTION BLOCK 3/8-16
18	067680	1	ASSY VOLTAGE REGULATOR 60HZ
19	082573	1	SWITCH ROC DPST 125V SPD
20	0C3910	1	TRANSFORMER 240/16V 1VA & 56VA
21	029673	1	DIO BRIDGE 25A 600V
22	034616	1	FITTING STRAIGHT 3/4
23	0E2514	1	FITTING CONDUIT STR 1-1/2"
24	0F0581	1	BRACKET FUSE HOLDER 2.5L FORD
25	040213	2	PCB SUPPORT SNAP-IN 1/4"
26	0F0558	1	BRACKET PCB SUPPORT 2.5L FORD
27	0F0598	1	DECAL FUSES 2.5L CNTRL PANEL
28	0F0599	1	DECAL TB1 2.5L CONTROL PANEL
29	0F0600	1	DECAL ICT 2.5L CONTROL PANEL
30	054199	1	DECAL DANGER HIGH VOLTAGE
31	049813	1	NUT HEX M6 X 1.0 G8 YEL CHR
32	0F0653	1	DECAL CONTROL HSB 2.5L FORD
33	022097	3	WASHER LOCK M6-1/4
34	0C2212	9	SCREW PHTT M4-0.7 X 16 ZYC
35	022264	22	WASHER LOCK #8-M4
36	0C2265	13	SCREW PHTT M4-0.7 X 12 ZYC
37	023965	2	SCREW RHM #8-32 X 3/8
38	039782	1	BRKT MTG CB BQ
39	0D5544	1	CB 0100A 2P 240V S BQ2 LL (20KW)
	0D5541	1	CB 0070A 2P 240V S BQ2 LL (15KW)
40	020911	2	SCREW PPHM M5-0.8 X 30 ZINC
41	0A8955	2	SCREW PHM M6-1.0 X 20MM
42	022152	3	WASHER LOCK #10
43	051716	2	NUT HEX M5-0.8 G8 YEL CHR
44	023762	1	WASHER SHAKEPROOF EXT #10 STL
45	033121	1	SCREW HHC #10-32 X 1/2
46	026850	1	WASHER SHAKEPROOF EXT 1/4 STL
47	0912970087	1	ASSY WIRE 14AWG 16" #0 GRN/YEL
48	022158	1	NUT HEX #10-32 STEEL
49	0E7403C	1	FUSE ATO TYPE 15 AMP (BLUE)
50	0E7403A	1	FUSE ATO TYPE 5 AMP (TAN)
51	0F0526A	1	HARN CTRL PNL 2.5L FD (NOT SHOWN)
52	0A2115	2	WASHER NYLON .257
53	022473	2	WASHER FLAT 1/4-M6 ZINC
54	048352	1	RES 5R 5% 25W
55 *	046357	REF	BLOCK TERM 20A 6 X 6 X 1100V
56 *	047822	REF	BLOCK TERM 20A 7 X 6 X 1100V
57 *	0F1467	REF	ASSY WIRE FUSE HOLDER
58 *	0E6881	REF	SOCKET RELAY
59 **	049226	2	WASHER LOCK M5
60 **	051716	2	NUT HEX M5-0.8 G8 YEL CHR
61 **	052619	2	SCREW HHC M5-0.8 X 20 G8.8
62 **	023897	4	WASHER FLAT #10 ZINC

* PART OF I/N 51, P/N 0F0526A CONTROL PANEL HARNESS.
** NOT SHOWN. HARDWARE FOR ATTACHING WIRES TO I/N 39.

Generac Liquid-cooled 25 kW Generator Engine — Drawing No. 0E9918-E

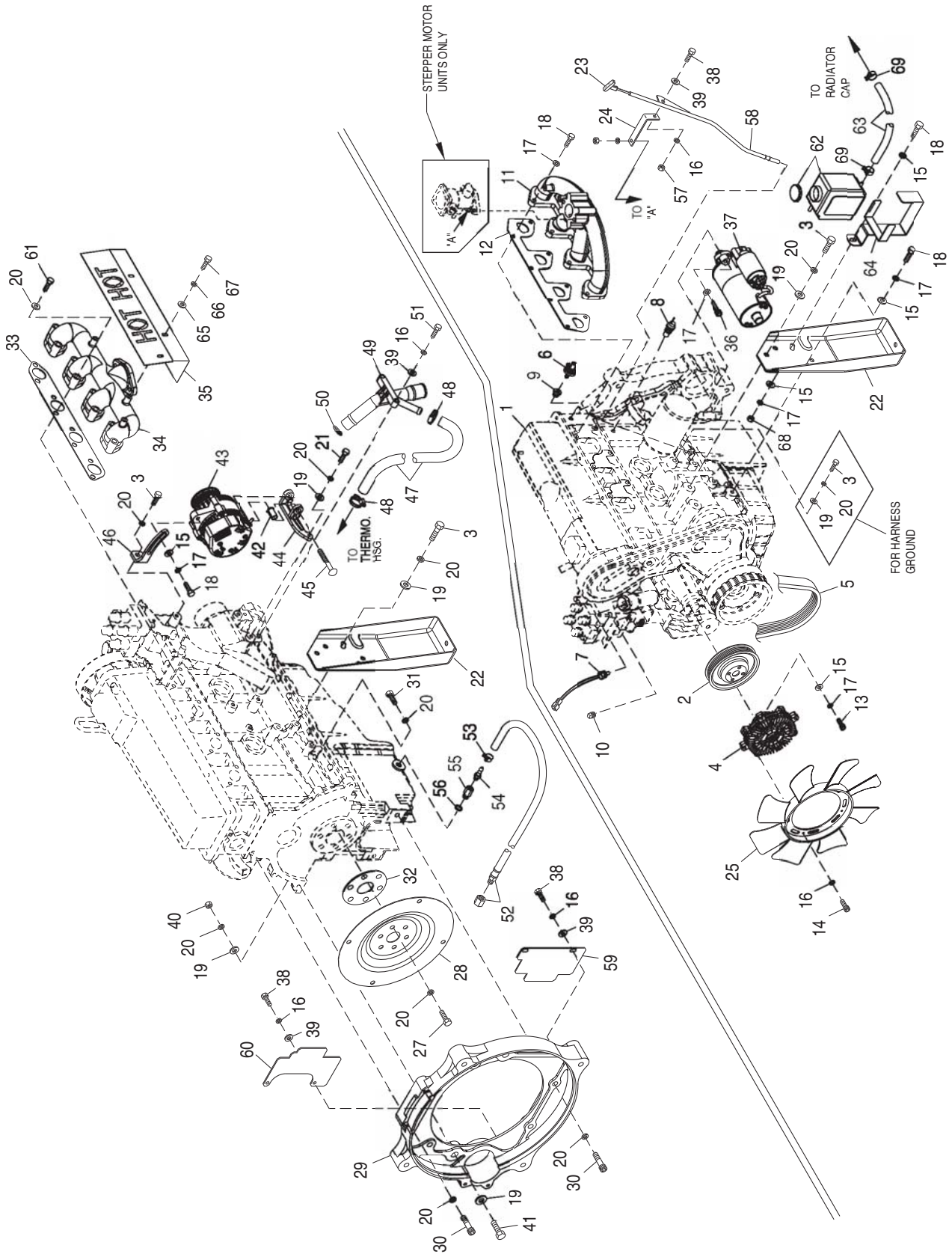

ITEM	PART NO.	QTY.	DESCRIPTION
1	0E9909	REF	ENGINE 2.5L FORD
2	0E9739	1	PULLEY, 2.5L FORD WATER PUMP
3	049814	8	SCREW HHC M10-1.5 X 25 G8.8
4	0F0001	1	CLUTCH, COOLING FAN 2.5L FORD
5	0D3488B	1	SERPENTINE BELT - 41 3/8" LENGTH
6	0A8584	1	SWITCH,OIL PRESSURE,10PSI,2POL
7	0E0561	1	ASSY WATER LEVEL SENSOR C/E PL
8	0A6751	1	SW-TMP 245DEG 3/8NPT
9	035579	1	BUSHING REDUCER 1/4 TO 1/8
10	026925	1	PLUG STD PIPE 3/8 STEEL SQ HD
11	0E9611	1	MANIFOLD, INTAKE (MACHINED) (STEPPER MOTOR)
	0E9611A	1	MANIFOLD INTAKE MACH BOSCH32 (BOSCH GOV.) (NOT SHOWN)
12	0E9681	1	GASKET, 2.5L FORD INTAKE MAN.
13	039253	4	SCREW HHC M8-1.25 X 20 G8.8
14	097962	4	SCREW SHC M6-1.0 X 25 G12.9 ZP
15	022145	8	WASHER FLAT 5/16-M8 ZINC
16	022097	11	WASHER LOCK M6-1/4
17	022129	16	WASHER LOCK M8-5/16
18	043107	11	SCREW HHC M8-1.25 X 25 G8.8
19	022131	19	WASHER FLAT 3/8-M10 ZINC
20	046526	30	WASHER LOCK M10
21	052625	2	SCREW SHC M10-1.5 X 35 G12.9
22	0E9708	2	ENGINE FOOT, 2.5L FORD
23	0E9738	1	DIPSTICK, 2.5L FORD
24	0E9929	1	BRACKET, DIPSTICK TUBE
25	0F0230	1	FAN 16" COOLING
26	0E9834	1	HARNESS, 2.5L FORD ENGINE (GEN-ERAC & GUARDIAN) (NOT SHOWN)
	0E9834A	1	HARNESS,2.5L FORD (QUIET SOURCE) (GENERAC-BOSCH GOV.) (NOT SHOWN)
27	0D5417	6	SCREW HHC M10-1.0 X 25 G10.9
28	0E5048B	1	FLEXPLATE 2.5L FORD
29	0E9655	1	ADAPT CASTING MACH 2.5L FORD
30	057192	4	SCREW SHC M10-1.5 X 30 G12.9
31	060619	2	SCREW SHC M10-1.50 X 40 G12.9
32	0E8940	1	SPACER FLEXPLATE HSB
33	0E9680	1	GASKET, 2.5L FORD EXHAUST MAN.
34	0E9609	1	MANIFOLD, EXHAUST (MACHINED)
35	0E9930	1	HEAT SHIELD, EXHAUST MANIFOLD
36	049821	3	SCREW SHC M8-1.25 X 30 G12.9
37	0E9747	1	STARTER, 12 VOLT
38	043116	5	SCREW HHC M6-1.0 X 12 G8.8
39	022473	6	WASHER FLAT 1/4-M6 ZINC
40	045772	2	NUT HEX M10-1.5 G8 YEL CHR
41	064416	2	SCREW HHC M10-1.5 X 45 G8.8
42	0F0252	1	SPRING BUSHING
43	0E9868	1	ALTERNATOR, D.C
44	0F0035	1	BRKT,D.C. ALTERNATOR(MACHINED)
45	026082	1	SCREW HHC 3/8-16 X 2-1/4 G5
46	0E9928	1	TENSIONER, D.C. ALTERNATOR
47	0F0383	1	HOSE,2.5L FORD COOLANT BY-PASS
48	057823	2	CLAMP HOSE #10 .56-1.06
49	0E9737	1	LOWER HOSE ADAPTER,2.5L FORD
50	0F0393	1	O-RING 1-3/16 X 1-7/16 X 1/8
51	045757	2	SCREW HHC M6-1.0 X 25 G8.8
52	069860C	1	HOSE OIL DRAIN ASSY 21"
53	048031J	REF	HOSE CLAMP BAND 5/8"
54	055596	1	BARBED STR 3/8NPT X 3/8
55	077456	1	ADAPTER M12-1.75 3/8NPT
56	052677	1	WASHER NYLON .50 X .87 X .06
57	049813	1	NUT HEX M6 X 1.0 G8 YEL CHR
58	0E9738A	1	DIPSTICK TUBE, 2.5L FORD
59	0F1132	1	COVER, R/H SIDE ENGINE ADAPTOR
60	0F1133	1	COVER, L/H SIDE ENGINE ADAPTOR
61	059355	8	SCREW SHC M10-1.50 X 50 G12.9
62	076749	1	TANK COOLANT RECOVERY
63	029032	1	HOSE 9/32 ID (39"LG)
64	0F1433	1	BRACKET,2.5L FORD WATER BOTTLE
65	070007	3	WASHER FLAT M6 SS
66	070005	3	WASHER LOCK M6 SS
67	080826	3	SCREW HHC M6-1.0 X 12 SS
68	045771	1	NUT HEX M8-1.25 G8 YEL CHR
69	048031C	2	CLAMP HOSE BAND 1/4

Generac Liquid-cooled 25 kW Generator
Alternator — Drawing No. 0E8660-B

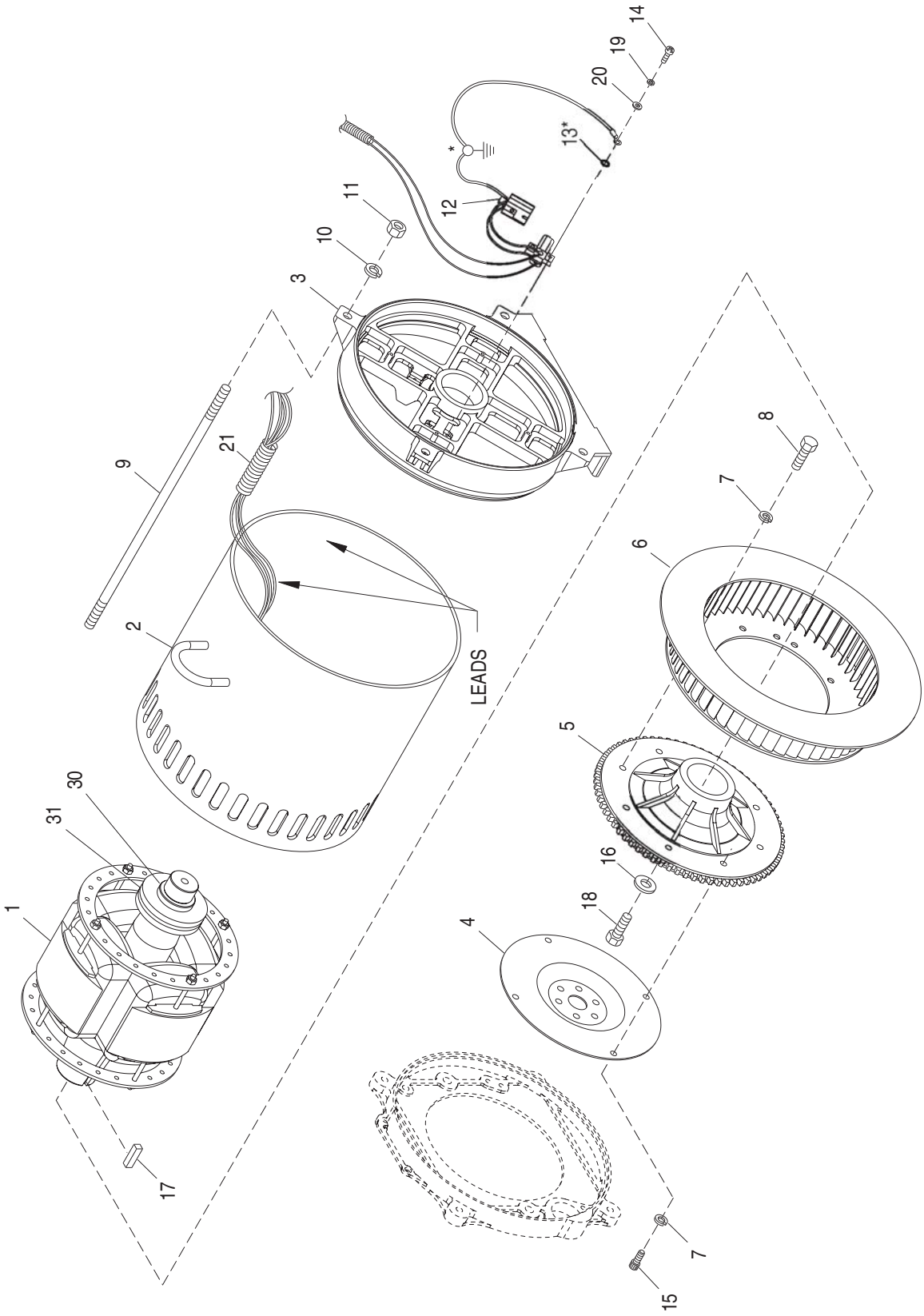

ITEM	PART NO.	QTY.	DESCRIPTION
1	0F1659A	1	ROTOR 390 15KW 1P DIRECT HSB (2.5L FORD)
	0F1657A	1	ROTOR 390 20KW 1P DIRECT HSB (2.5L FORD)
	0F1655A	1	ROTOR 390 25KW 1P DIRECT HSB (2.5L FORD)
	0E5093A	1	ROTOR 390 30KW 1P DIRECT HSB (3.0L FORD & 2.5L FORD)
	0E7413A	1	ROTOR 390 40KW 1P DIRECT HSB (3.9L CHRYSLER)
2	0F1660A	1	STR 390 15AD HSB (382MM LONG)(2.5L FORD)
	0F1658A	1	STR 390 20AD HSB (382MM LONG)(2.5L FORD)
	0F1656A	1	STR 390 25AD HSB (382MM LONG)(2.5L FORD)
	0E5094A	1	STR 390 35AD1 HSB (382MM LONG)(3.0L FORD & 2.5L FORD)
	0E7412A	1	STR 390 40AD HSB (433MM LONG)(3.9L CHRYSLER)
3	0E5706	1	REAR BEARING CARRIER 390/DRCT
4	0E5048	REF	FLEXPLATE 3.0L FORD
	0E5048A	REF	FLEXPLATE 3.9L HSB
	0E5048B	REF	FLEXPLATE 2.5L FORD
5	0E6668	1	FLYWHEEL ASSY 3.0L HSB LG GEAR
6	0E6076	1	REVCOR FAN 10.75 X 2 W/PRESS DIS
7	046526	8	WASHER LOCK M10
8	051755	4	SCREW HHC M10-1.5 X 16 G8.8
9	04576100BK	4	STUD M14-2.0 X 490 G5 ZINC (3.0L FORD & 2.5L FORD)
	04576100BF	4	STUD M14-2.0 X 540 G5 ZINC (3.9L CHRYSLER)
10	043123	4	WASHER LOCK M14
11	051779	4	NUT HEX M14-2.0 G8 YEL CHR
12	0E7587	1	ASSY BRUSH HOLDER 390/HSB
13	023365	1	WASHER SHAKEPROOF INT #8
14	092980	4	SCREW PPHM M4-0.7 X 25
15	057192	4	SCREW SHC M10-1.5 X 30 G12.9
16	0A2602	1	WASHER FLAT .688 ID X 3.25 OD
17	042558	1	KEY SQ 3/8 X 1 STEEL
18	0A2601	1	SCREW HHC M16-2.0 X 45 G8.8
19	022264	4	WASHER LOCK #8-M4
20	038150	4	WASHER FLAT #8 ZINC
21	077043F	1	CONDUIT FLEX 1-1/4" (30" LG - 3.0L FORD & 3.9L CHRYSLER)
	077043F	1	CONDUIT FLEX 1-1/4" (18" LG - 2.5L FORD)
ROTOR REPLACEMENT PARTS			
30	047248	1	BALL BEARING-45 MM
31	070892	1	SLIP RING -MACHINED-

Generac Liquid-cooled 25 kW Generator
Fuel System — Drawing No. 0E9980-D

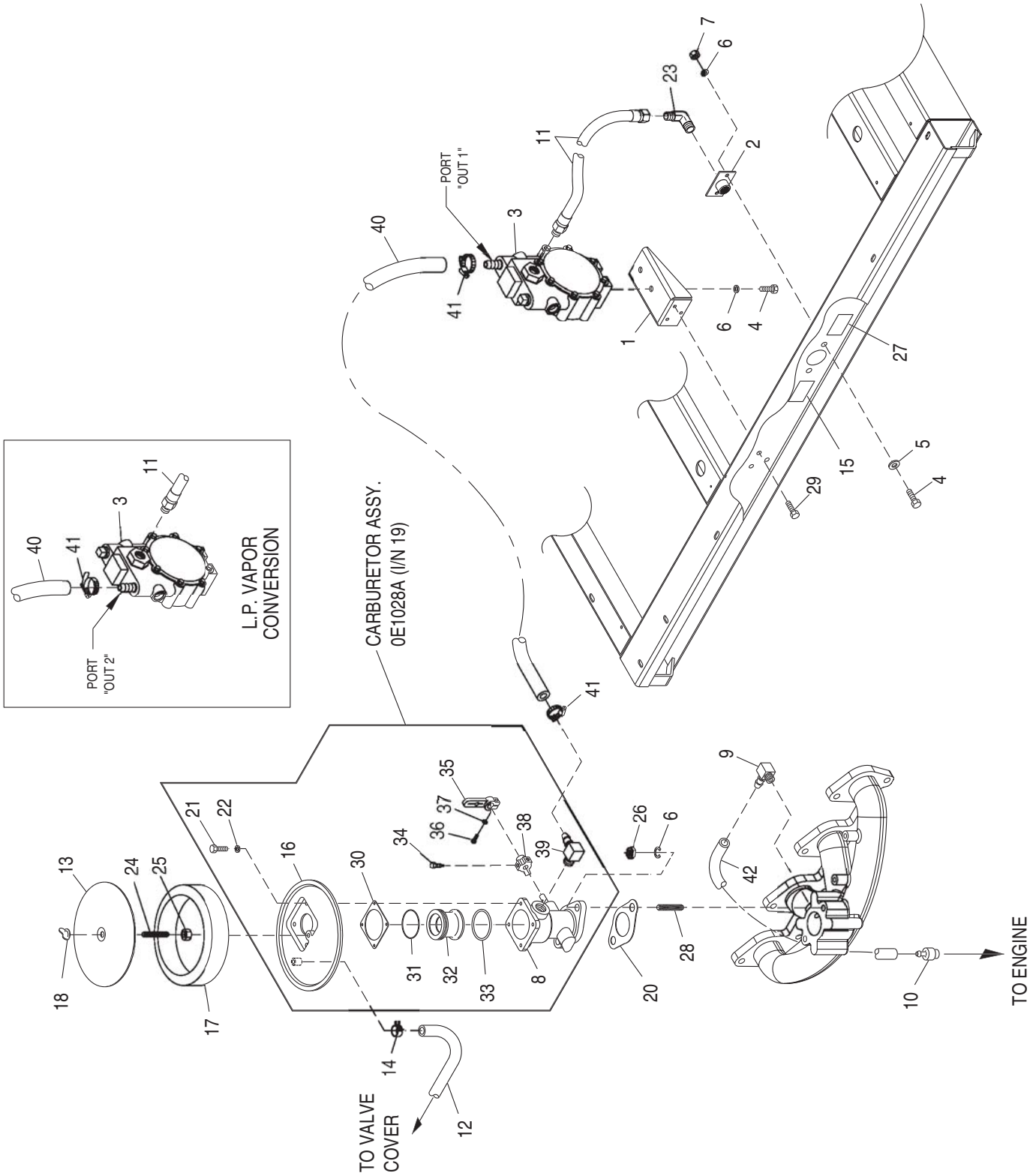

ITEM	PART NO.	QTY.	DESCRIPTION
1	0E8456	1	BRACKET FUEL REGULATOR
2	075580	1	FLANGE FUEL INLET
3	0E9967	1	ASSY FUEL REG 2.5L FRD N/G-L/P
4	039253	4	SCREW HHC M8-1.25 X 20 G8.8
5	022145	2	WASHER FLAT 5/16 ZINC
6	022129	6	WASHER LOCK M8-5/16
7	045771	2	NUT HEX M8-1.25 G8 YEL CHR
8 *	0F1570	1	BODY CARBURETOR ASSEMBLY
9	0A6344	1	BARBED EL 90 1/8 NPT X 3/8
10	0F3994	REF.	PCV VALVE 2.5L FORD
11	0E1056	1	FUEL HOSE ASSM. NAT. GAS/L.P.V.
12	0F0397	1	HOSE CRANKCASE BREATHER
13	0A5547	1	COVER AIR CLEANER
14	048031C	2	CLAMP HOSE BAND 1/4
15	0D1509	1	DECAL INLET PRESSURE
16 *	0E0591	1	ADAPTER CARB. TO AIR CLNR
17	059402	1	FILTER ELEMENT
18	037561	1	NUT WING 1/4-20 NYLK
19	0E1028A	1	CARBURETOR ASSY. 2.5L FORD
20	059401	1	CARBURETOR GASKET
21 *	091526	4	SCREW PPHM M5-0.8 X 12 ZNC
22 *	049226	4	WASHER LOCK M5
23	026307	1	ELBOW 90D STREET 3/4
24	062522	1	STUD TH 1/4-20 X 3 G2 ZNC FULL
25	022127	1	NUT HEX 1/4-20 STEEL
26	022259	2	NUT HEX 5/16-18 STEEL
27	050279	1	DECAL FUEL INLET NG
28	0A6125	2	STUD 5/16-18 X 1.25 F THR
29	0C2454	3	SCREW TH-FRM M6-1 X 16 N WA Z/JS
30*	0E1104	1	GASKET, AIR CLEANER ADAPTER
31*	0E0668	1	O-RING 2-028 1.38 X 1.50 X .06
32*	0E0590A	1	VENTURI 20MM
33*	0C5133	1	0-RING 29.82 X 2.62
34*	0E0665	1	SCREW THROTTLE PIN STOP
35*	0E1108	1	THROTTLE ARM REWORK
36*	033138	1	SCREW HHM #10-32 X 5/8
37*	022152	1	WASHER LOCK #10
38*	0E0645	1	LEVER,THROTTLE STOP
39*	034339	1	BARBED EL 90 3/8 NPT X 5/8
40	059194	1	HOSE 5/8 ID LPG & NG (24" LG)
41	057823	2	CLAMP HOSE #10 .56 - 1.06
42	0F0382	1	HOSE 3/8" 90 DEG 2.5L PVC

* INCLUDED IN ITEM 19 (CARBURETOR ASSY)

Generac Liquid-cooled 25 kW Generator
Natural Gas Fuel System — Drawing No. 0F2384-C

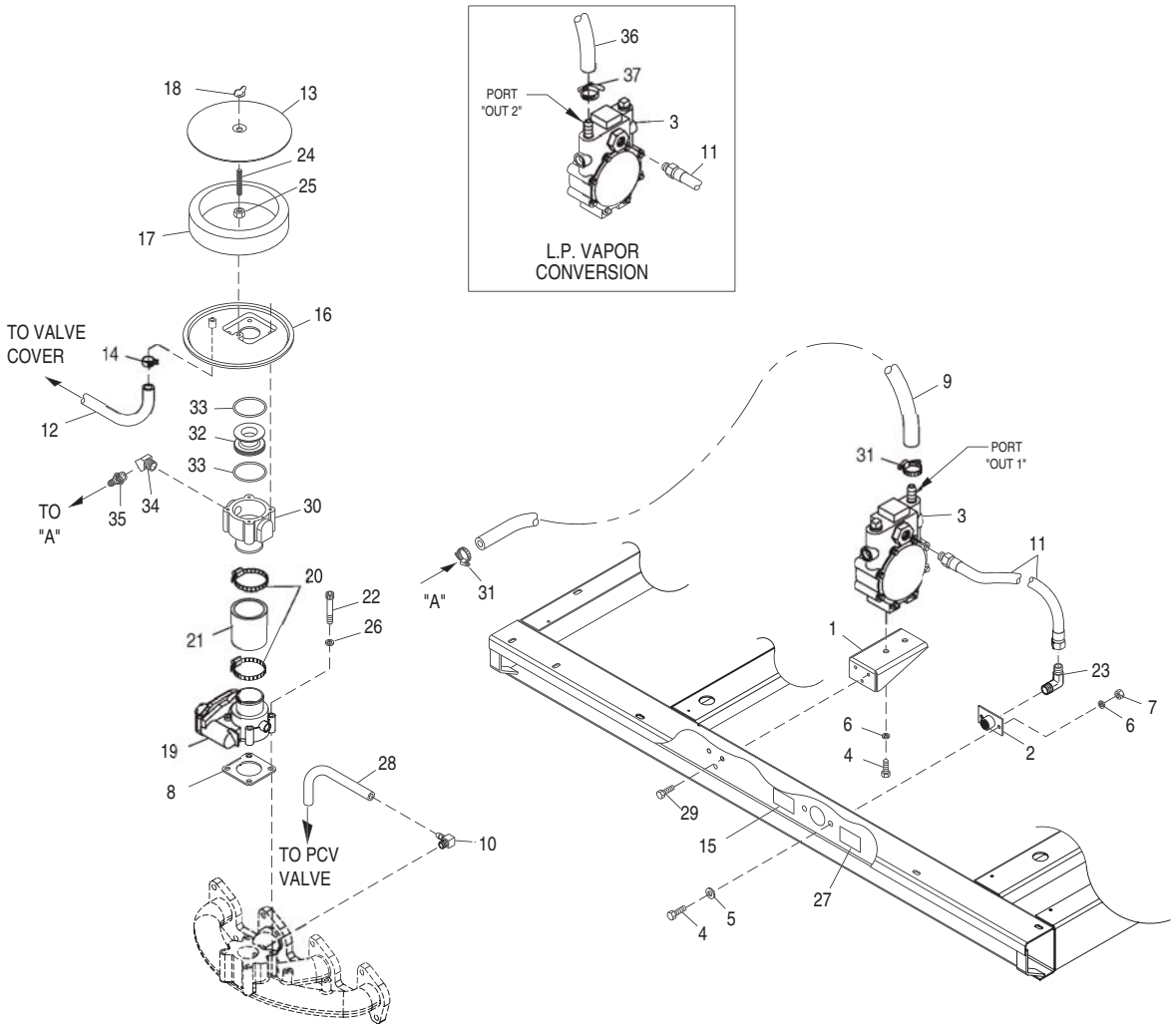

ITEM	PART NO.	QTY.	DESCRIPTION
1	0E8456	1	BRACKET, FUEL REGULATOR
2	075580	1	FLANGE FUEL INLET
3	0F2718	1	ASSY REG 2.5L BOSCH N/G-L/P
4	039253	4	SCREW HHC M8-1.25 X 20 G8.8
5	022145	2	WASHER FLAT 5/16 ZINC
6	022129	2	WASHER LOCK M8-5/16
7	045771	2	NUT HEX M8-1.25 G8 YEL CHR
8	0E6586	2	GASKET BOSCH 32 & 40
9	059194	1	HOSE 5/8 ID LPG & NG (24"LG)
10	0A6344	1	BARBED EL 90 1/8NPT X 3/8
11	0E1056	1	FUEL HOSE ASSM. NAT.GAS/L.P.V.
12	0F0397	1	HOSE, CRANKCASE BREATHER
13	0A5547	1	COVER AIR CLEANER
14	048031C	2	CLAMP HOSE BAND 1/4
15	0D1509	1	DECAL INLET PRESSURE
16	0E0519A	1	ADAPTER, CARBURETOR W/PVC CONN
17	059402	1	FILTER ELEMENT
18	037561	1	NUT WING 1/4-20 NYLK
19	0E4395	1	ACTUATOR BOSCH 32, GOVERNOR
20	035685	2	CLAMP HOSE #28 1.32-2.25
21	057753B	1	HOSE 1.5 ID X 2 LG 20R4
22	046580	4	SCREW SHC M6-1.0 X 45 G12.9
23	026307	1	ELBOW 90D STREET 3/4
24	062522	1	STUD TH 1/4-20 X 3 G2 ZNC FULL
25	022127	1	NUT HEX 1/4-20 STEEL
26	022097	4	WASHER LOCK M6-1/4
27	050279	1	DECAL FUEL INLET NG
28	0F0382	1	HOSE 3/8" 90DEG 2.5L PVC
29	0C2454	3	SCREW TH-FRM M6-1X16 N WA Z/JS
30	0E6382A	1	VENTURI HOLDER W/32MM ACTUATOR
31	057823	2	CLAMP HOSE #10 .56 - 1.06
32	0E7122C	1	VENTURI, 21MM ID THROTTLE
33	0F2119	2	O-RING 45.63 ID X 2.62 WIDTH
34	0E8286	1	STREET EL 45DEG 1/2" NPT BRASS
35	044117	1	BARBED STR 3/8NPT X 5/8
36	0F3994	REF.	PCV VALVE 2.5L FORD

Generac Liquid-cooled 25 kW Generator
Block Heater — Drawing No. 0F2439

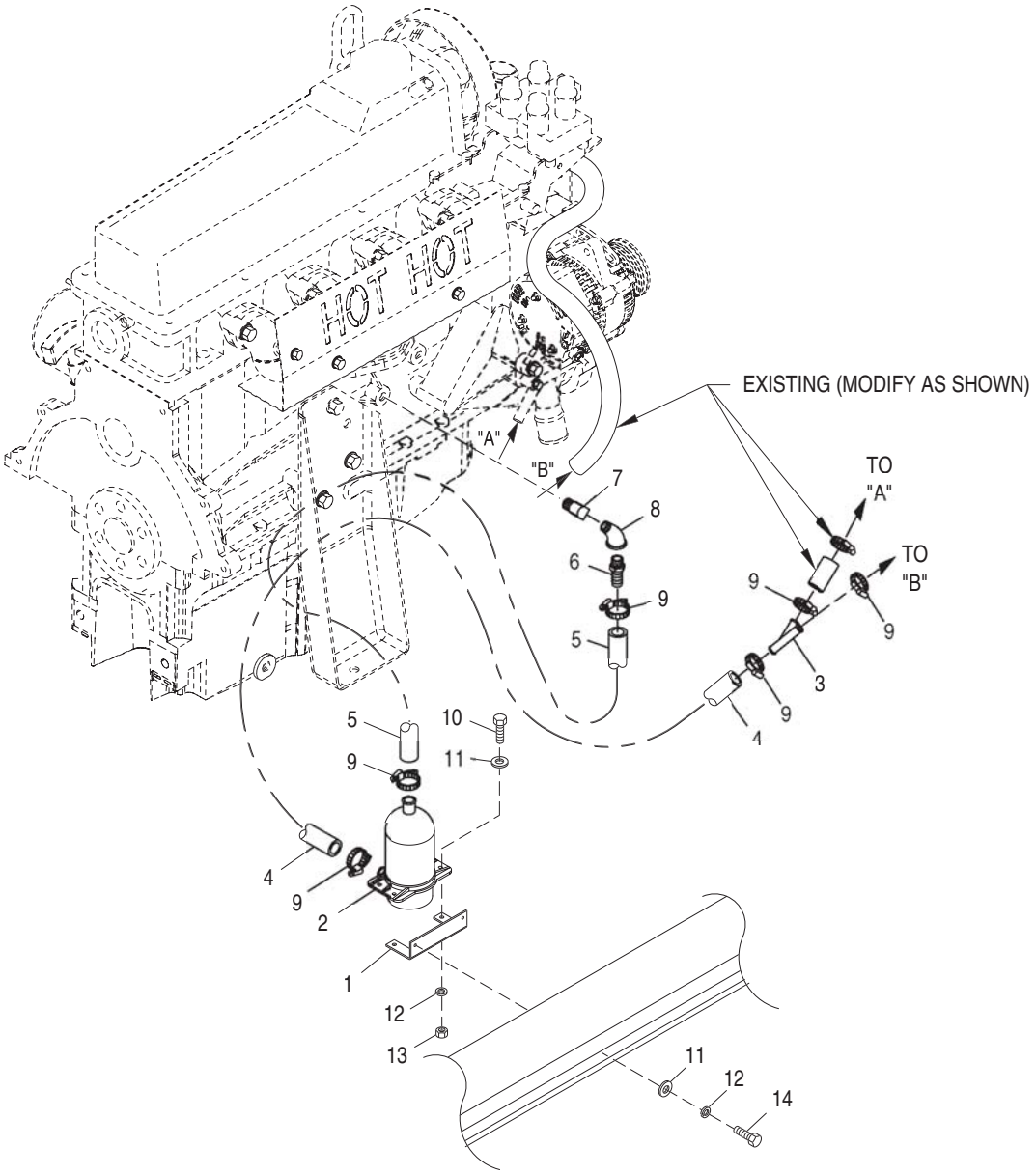

ITEM	PART NO.	QTY.	DESCRIPTION
1	084427	1	BRACKET HEATER W/WELDNUTS
2	084918	1	HEATER ENGINE 0500W 120V
3	063242	1	BARBED Y 5/8-HOSE
4	050967	1	HOSE COOL 5/8 ID 20R3 (25"LG)
5	050967	1	HOSE COOL 5/8 ID 20R3 (20"LG)
6	053660	1	BARBED STR 1/4 NPT X 5/8
7	046964	1	BARBED ST EL 1/4 NPT BRASS
8	030421	1	ELB STREET 45D 1/4NPT
9	057822	6	CLAMP HOSE #8 .53-1.00
10	042568	2	SCREW HHC M6-1.0 X 20 G8.8
11	022473	4	WASHER FLAT 1/4-M6 ZINC
12	022097	4	WASHER LOCK M6-1/4
13	049813	2	NUT HEX M6 X 1.0 G8 YEL CHR
14	047411	2	SCREW HHC M6-1.0 X 16 G8.8

Generac Liquid-cooled 25 kW Generator
Muffler — Drawing No. 0F2930

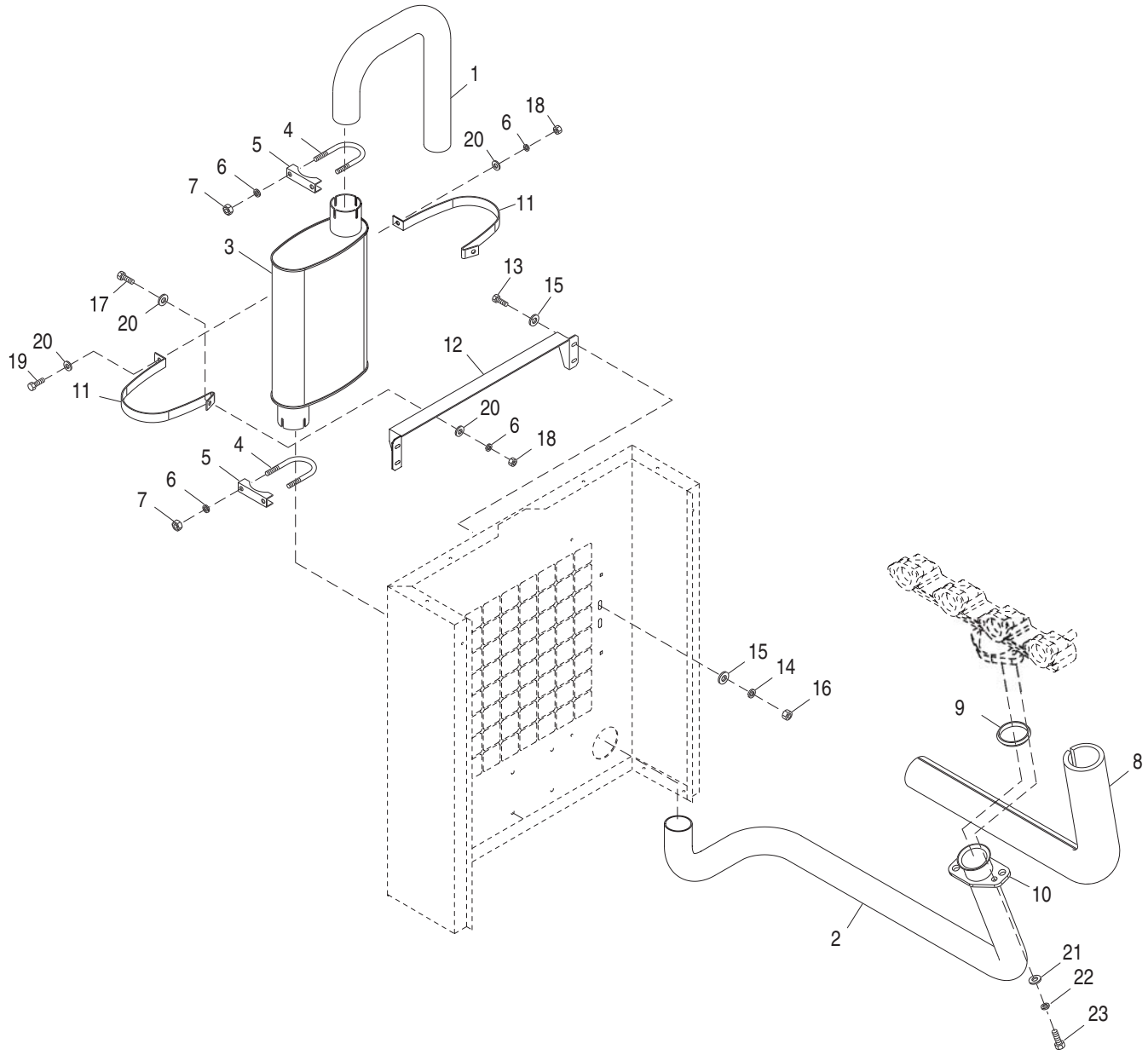

ITEM	PART NO.	QTY.	DESCRIPTION
1	0F2912	1	PIPE, MUFFLER OUT
2	0F2869	1	PIPE, EXHAUST 2.5L FORD
3	0F2823	1	MUFFLER, 2.5L FORD
4	036434	2	BOLT U 5/16-18 X 2.09
5	036449	2	SADDLE 2 INCH
6	022129	7	WASHER LOCK M8-5/16
7	022259	4	NUT HEX 5/16-18 STEEL
8	0E0170	1	EXHAUST BLANKET 705MM
9	044149	1	GASKET EXHAUST RING
10	0E8816	1	EXHAUST FLANGE 2" PIPE
11	0F2925	2	STRAP, MUFFLER
12	0F2926	1	BRACKET, MUFFLER

ITEM	PART NO.	QTY.	DESCRIPTION
13	047411	4	SCREW HHC M6-1.0 X 16 G8.8
14	022097	4	WASHER LOCK M6-1/4
15	022473	8	WASHER FLAT 1/4-M6 ZINC
16	049813	4	NUT HEX M6 X 1.0 G8 YEL CHR
17	039253	2	SCREW HHC M8-1.25 X 20 G8.8
18	045771	3	NUT HEX M8-1.25 G8 YEL CHR
19	042909	1	SCREW HHC M8-1.25 X 30 G8.8
20	022145	6	WASHER FLAT 5/16-M8 ZINC
21	022131	2	WASHER FLAT 3/8-M10 ZINC
22	085917	2	WASHER LOCK 3/8 SS
23	0D2611	2	SCREW HHC 3/8-16 X 1-3/4 SS

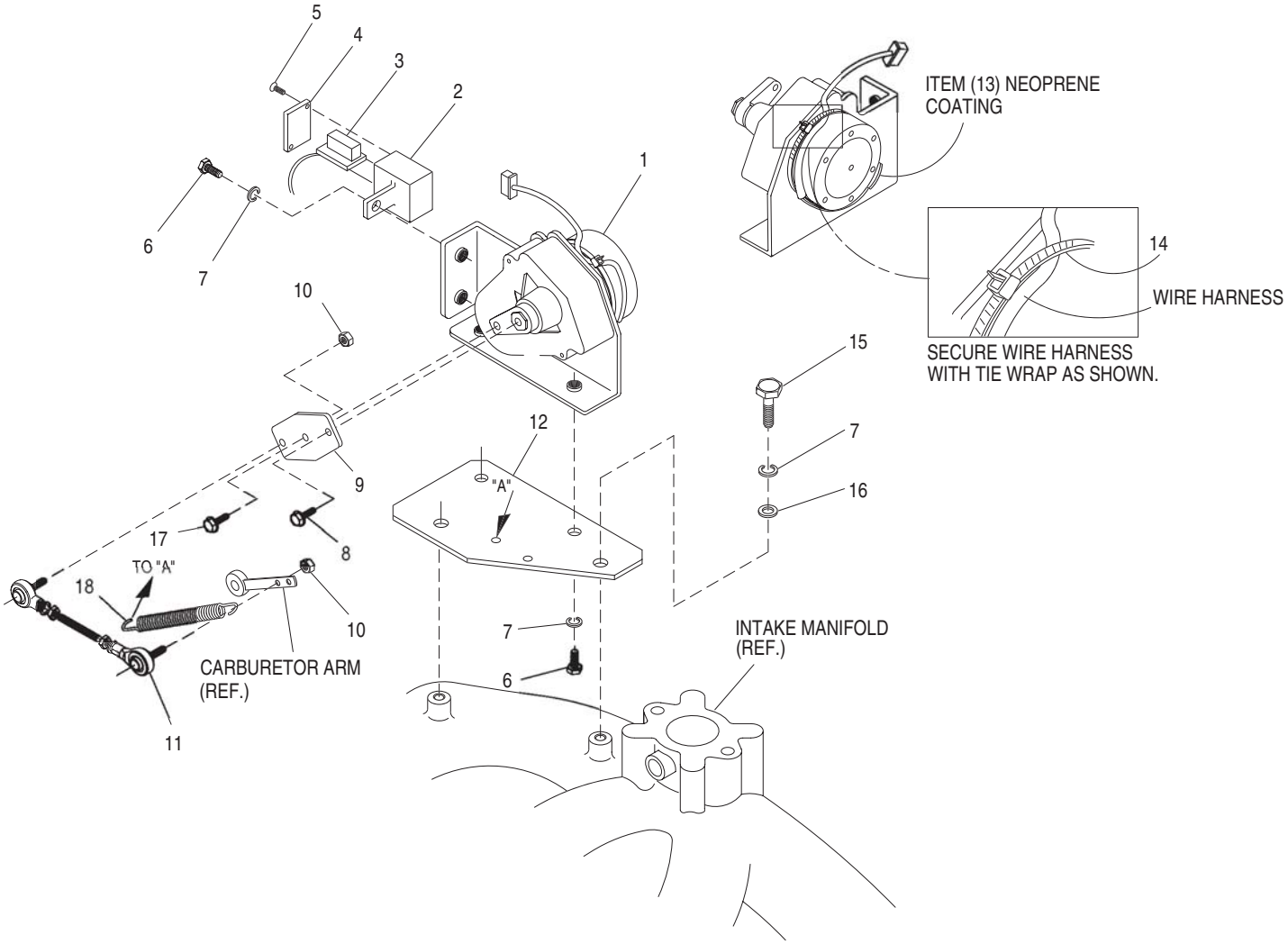

ITEM	PART NO.	QTY.	DESCRIPTION
1	098290	1	ASM MOTOR STEPPER
2	098941A	1	HOUSING GOVERNOR CONNECTOR
3	0F0454	REF	HARN GOV 2.5L FORD
4	098942A	1	COVER CONNECTOR HOUSING
5	098225	2	SCREW PFHST #2 X 5/8
6	043146	3	SCREW HHC M6-1.0 X 10 G8.8
7	022097	5	WASHER LOCK M6-1/4
8	0E7358	REF	SCREW PPPH HI-LO #4-24 X 3/8
9	098783	1	LEVER STEPPER MOTOR
10	037398	2	NUT LOCK HEX #10-32 NYL INS
11	0E1326	1	ASSY. CARBURETOR LINKAGE ROD
12	0A7106	1	BRACKET STEPPER MOTOR
13	074031	AR	LIQUID NEOPRENE
14	029333A	1	TIE WRAP 7.4"X.19" BLK UL
15	022507	2	SCREW HHC 1/4-20 X 1/2 G5
16	022473	2	WASHER FLAT 1/4 ZINC
17	064526	1	SCREW TAP HWH #6-25 X 3/8 ZINC
18	0E1694	1	SPRING,ANTI LASH

Generac Liquid-cooled 25 kW Generator
Radiator — Drawing No. 0E9965-D

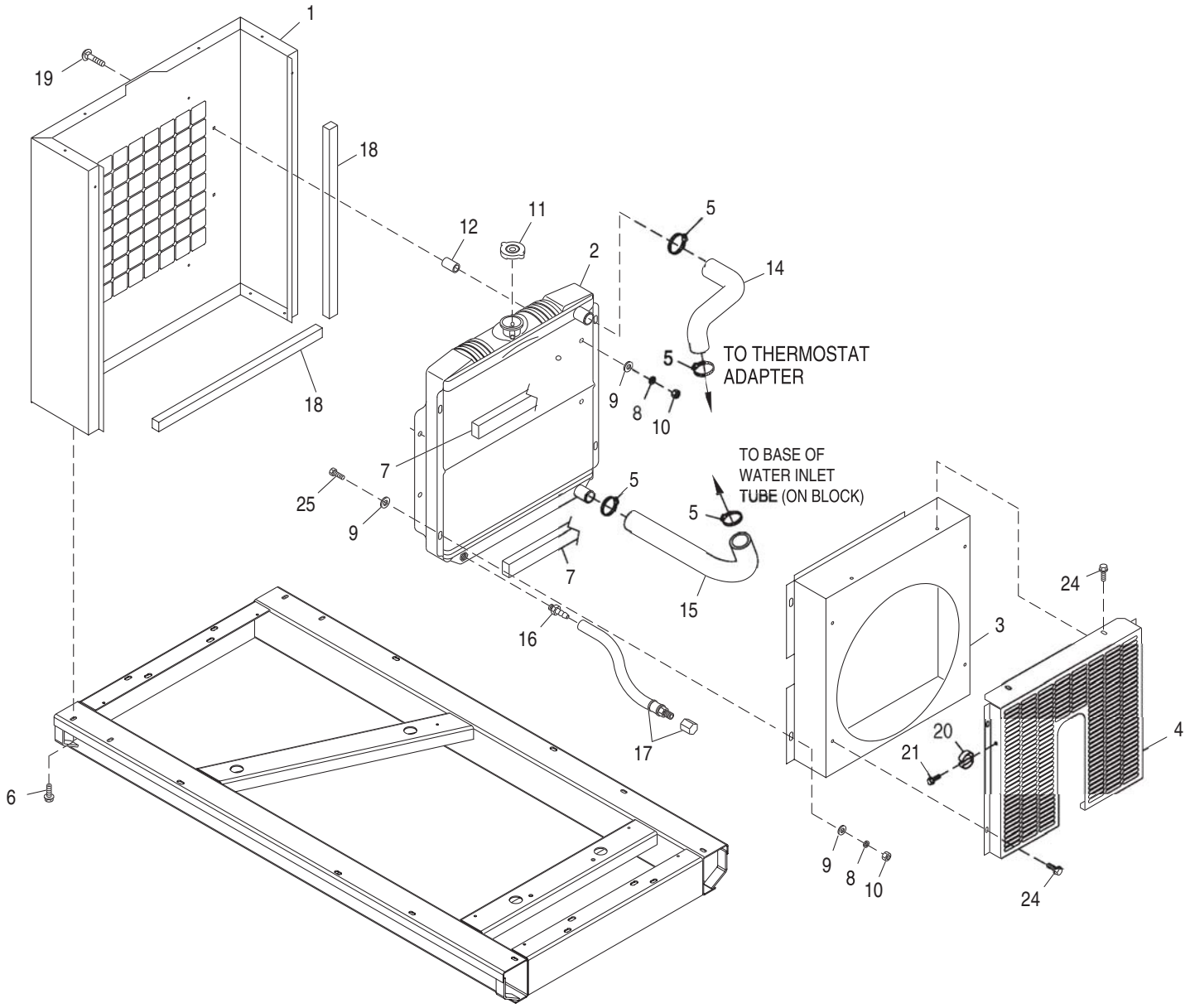

ITEM	PART NO.	QTY.	DESCRIPTION
1	0E9769	REF	SUPPORT,RADIATOR 2.5L FORD
	0F0779	REF	SUPPORT RADIATOR 2.5L AL
2	0E9837	1	RADIATOR, 2.5L FORD
3	0F0123	1	VENTURI, 16" FAN 2.5L FORD
4	0F0118	1	GUARD, FAN 2.5L FORD
5	099502	4	CLAMP HOSE #24 B1.06-2.00
6	0C2454	REF.	SCREW THF M6-1X16 N WA Z/JS
7	052250	2	TAPE FOAM 1 X 1(17"LG)
8	022097	8	WASHER LOCK M6-1/4
9	022473	12	WASHER FLAT 1/4 ZINC
10	022127	8	NUT HEX 1/4-20 STEEL
11	046627	1	CAP RADIATOR
12	060035	4	SPACER .41 X .75 X .87 ST/ZNC

ITEM	PART NO.	QTY.	DESCRIPTION
14	0F0127	1	HOSE, UPPER RADIATOR 174MM TAL
15	0E9833	1	HOSE, 2.5L FORD LOWER RADIATOR
16	035461	1	BARBED STR 1/4NPT X 3/8
17	069860C	1	HOSE OIL DRAIN ASSY 21"
18	0A7275	4	FOAM 1.5 X 1 ADHESIVE BACKING (21.5" LG)
19	031669	4	BOLT CARR 1/4-20 X 1-3/4 JS500
20	065852	1	SPRING CLIP HOLDER .37-.62
21	0A2111	1	SCREW SWAGE 10-32 X 5/16 Z/YC
24	0C2454	6	SCREW TH-FRM M6-1X16 N WA Z/JS
25	022287	4	SCREW HHC 1/4-20 X 3/4 G5

Generac Liquid-cooled 25 kW Generator
Installation Diagram — Drawing No. 0F0522

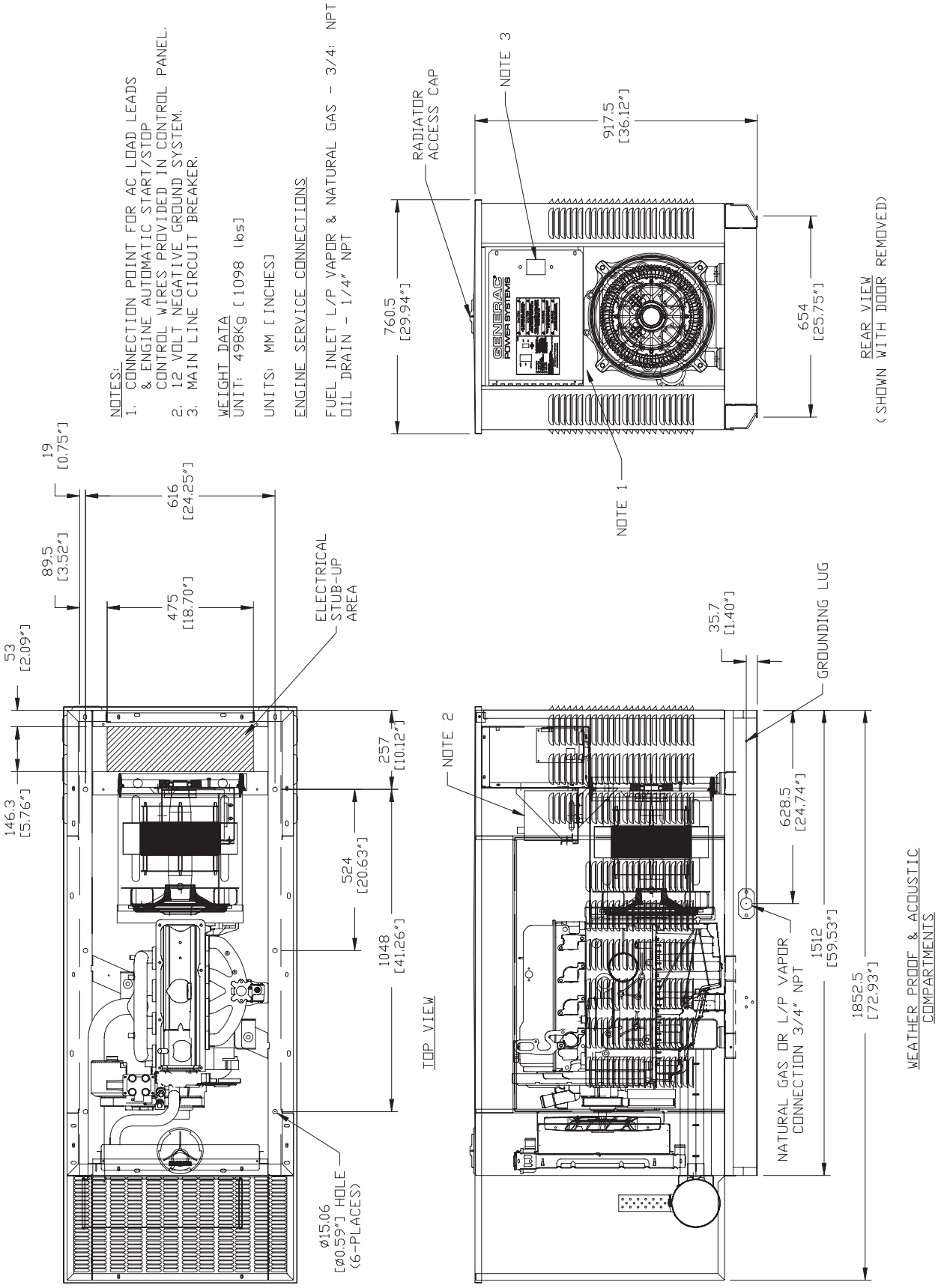

CALIFORNIA EMISSION CONTROL WARRANTY STATEMENT

YOUR WARRANTY RIGHTS AND OBLIGATIONS

The California Air Resources Board (CARB) and Generac Power Systems, Inc. (Generac) are pleased to explain the Emission Control System Warranty on your new engine.* In California, new utility, and lawn and garden equipment engines must be designed, built and equipped to meet the state's stringent anti-smog standards. Generac will warrant the emission control system on your engine for the periods of time listed below provided there has been no abuse, neglect, unapproved modification or improper maintenance of your engine.

Your emission control system may include parts such as the carburetor, ignition system and exhaust system. Generac will repair your engine at no cost to you for diagnosis, replacement parts and labor, should a warrantable condition occur.

MANUFACTURER'S EMISSION CONTROL SYSTEM WARRANTY COVERAGE:

Emissions control systems on 1995 and later model year engines are warranted for two years as hereinafter noted. If, during such warranty period, any emission-related component or system on your engine is found to be defective in materials or workmanship, repairs or replacement will be performed by a Generac Authorized Warranty Service Facility.

PURCHASER'S/OWNER'S WARRANTY RESPONSIBILITIES:

As the engine purchaser/owner, you are responsible for the completion of all required maintenance as listed in your factory supplied *Owner's Manual.* For warranty purposes, Generac recommends that you retain all receipts covering maintenance on your engine. However, Generac cannot deny warranty solely due to the lack of receipts or for your failure to ensure the completion of all scheduled maintenance.

As the engine purchaser/owner, you should, however, be aware that Generac may deny any and/or all warranty coverage or responsibility if your engine, or a part/component thereof, has failed due to abuse, neglect , improper maintenance or unapproved modifications, or the use of counterfeit and/or "grey market" parts not made, supplied or approved by Generac.

You are responsible for presenting your engine to a Generac Authorized Warranty Service Facility as soon as a problem occurs. The warranty repairs should be completed in a reasonable amount of time, not to exceed 30 days.

Warranty service can be arranged by contacting either your selling dealer or a Generac Authorized Warranty Service Facility. To locate the Generac Authorized Warranty Service Facility nearest you, call our toll-free number:

1-800-333-1322

IMPORTANT NOTE: This warranty statement explains your rights and obligations under the Emission Control System Warranty (ECS Warranty), which is provided to you by Generac pursuant to California law. See also the "Generac Limited Warranties for Generac Power Systems, Inc.," which is enclosed herewith on a separate sheet, also provided to you by Generac. The ECS Warranty applies **only** to the emission control system of your new engine. If there is any conflict in terms between the ECS Warranty and the Generac Warranty, the ECS Warranty shall apply except in circumstances where the Generac Warranty may provide a longer warranty period. Both the ECS Warranty and the Generac Warranty describe important rights and obligations with respect to your new engine.

Warranty service can be performed only by a Generac Authorized Warranty Service Facility. When requesting warranty service, evidence must be presented showing the date of the sale to the original purchaser/owner.

If you have any questions regarding your warranty rights and responsibilities, you should contact Generac at the following address:

ATTENTION WARRANTY DEPARTMENT
GENERAC POWER SYSTEMS, INC.
P.O. BOX 8
WAUKESHA, WI 53187

Part 1

EMISSION CONTROL SYSTEM WARRANTY

Emission Control System Warranty (ECS Warranty) for 1995 and later model year engines:

(a) Applicability: This warranty shall apply to 1995 and later model year engines. The ECS Warranty Period shall begin on the date the new engine or equipment is purchased by/delivered to its original, end-use purchaser/owner and shall continue for 24 consecutive months thereafter.

(b) General Emissions Warranty Coverage: Generac warrants to the original, end-use purchaser/owner of the new engine or equipment and to each subsequent purchaser/owner that each of its engines is ...

(1) Designed, built and equipped so as to conform with all applicable regulations adopted by the CARB pursuant to its authority, and

(2) Free from defects in materials and workmanship which, at any time during the ECS Warranty Period, may cause a warranted emissions-related part to fail to be identical in all material respects to the part as described in the engine manufacturer's application for certification.

(c) The ECS Warranty only pertains to emissions-related parts on your engine, as follows:

(1) Any warranted, emissions-related parts that are not scheduled for replacement as required maintenance in the *Owner's Manual* shall be warranted for the ECS Warranty Period. If any such part fails during the ECS Warranty Period, it shall be repaired or replaced by Generac according to Subsection (4) below. Any such part repaired or replaced under the ECS Warranty shall be warranted for the remainder of the ECS Warranty Period.

(2) Any warranted, emissions-related part that is scheduled only for regular inspection as specified in the *Owner's Manual* shall be warranted for the ECS Warranty Period. A statement in such written instructions to the effect of "repair or replace as necessary" shall not reduce the ECS Warranty Period. Any such part repaired or replaced under the ECS Warranty shall be warranted for the remainder of the ECS Warranty Period.

(3) Any warranted, emissions-related part that is scheduled for replacement as required maintenance in the *Owner's Manual* shall be warranted for the period of time prior to the first scheduled replacement point for that part. If the part fails prior to the first scheduled replacement, the part shall be repaired or replaced by Generac according to Subsection (4) below. Any such emissions-related part repaired or replaced under the ECS Warranty shall be warranted for the remainder of the ECS Warranty Period prior to the first scheduled replacement point for such emissions-related part.

(4) Repair or replacement of any warranted, emissions-related part under this ECS Warranty shall be performed at no charge to the owner at a Generac Authorized Warranty Service Facility.

(5) When the engine is inspected by a Generac Authorized Warranty Service Facility, the owner shall not be held responsible for diagnostic costs if the repair is deemed warrantable.

(6) Generac shall be liable for damages to other original engine components or approved modifications proximately caused by a failure under warranty of any emission-related part covered by the ECS Warranty.

(7) Throughout the ECS Warranty Period, Generac shall maintain a supply of warranted emission-related parts sufficient to meet the expected demand for such emission-related parts.

(8) Any Generac authorized and approved emission-related replacement part may be used in the performance of any ECS Warranty maintenance or repairs and will be provided without charge to the owner. Such use shall not reduce Generac ECS Warranty obligations.

(9) Unapproved, add-on, modified, counterfeit and/or "grey market" parts may not be used to modify or repair a Generac engine. Such use voids this ECS Warranty and shall be sufficient grounds for disallowing an ECS Warranty claim. Generac shall not be held liable hereunder for failures of any warranted parts of a Generac engine caused by the use of such an unapproved, add-on, modified, counterfeit and/or "grey market" part.

EMISSION RELATED PARTS INCLUDE THE FOLLOWING:

1) Fuel Metering System:

1.2) LPG/Natural Gas carburetion assembly and its internal components.
- a) Fuel controller (if so equipped)
- b) Mixer and its gaskets (if so equipped)
- c) Carburetor and its gaskets (if so equipped)
- d) Primary gas regulator (if so equipped)
- e) LP liquid vaporizer (if so equipped)

2) Air Induction System including:
- a) Intake pipe/manifold
- b) Air cleaner

3) Ignition System including:
- a) Spark plug
- b) Ignition module

4) Catalytic Muffler Assembly (if so equipped) including:
- a) Muffler gasket
- b) Exhaust manifold

5) Crankcase Breather Assembly including:
- a) Breather connection tube

*Generac engine types covered by this warranty statement include the following:

1) Prepackaged Standby Generator
2) Auxiliary Power Unit (APU) Generator
3) Standby Generator

Part 2

GENERAC POWER SYSTEMS STANDARD TWO-YEAR LIMITED WARRANTY FOR GENERAC RESIDENTIAL AND LIGHT COMMERCIAL UNITS

For a period of two (2) years or two thousand (2,000) hours of operation from the date of sale, which ever occurs first, Generac Power Systems, Inc. will, at its option, repair or replace any part(s) which, upon examination, inspection, and testing by Generac Power Systems or an Authorized/Certified Generac Power Systems Dealer, or branch thereof, is found to be defective under normal use and service, in accordance with the warranty schedule set forth below. Any equipment that the purchaser/owner claims to be defective must be examined by the nearest Authorized/Certified Generac Power Systems Dealer, or branch thereof. This warranty applies only to Generac Power Systems Generators used in "Standby" applications, as Generac Power Systems, Inc. has defined Standby. Scheduled maintenance, as outlined by the generators owners manual, is highly recommended. This should be performed by an Authorized/Certified Generac Power Systems Dealer, or branch thereof. This will verify service has been performed on the unit throughout the warranty period.

WARRANTY SCHEDULE

YEAR ONE and TWO — one hundred percent (100%) coverage on mileage, labor, and parts listed (proof of purchase and maintenance required).

- Engine ALL COMPONENTS
- Alternator ALL COMPONENTS
- Transfer System ALL COMPONENTS

Guidelines:

Travel allowance for Air and Liquid cooled units is limited to 60 miles maximum, and 2.0 hours maximum or $100.00 maximum (per occurrence, whichever is less), round trip, to the nearest authorized Generac Service Facility, and only applies to permanently wired and mounted units. Any and all warranty repairs and/or concerns, must be performed and/or addressed by an Authorized/Certified Generac Power Systems Dealer, or branch thereof.

- A Generac Power Systems, Inc. Transfer Switch is highly recommended to be used in conjunction with the generator set. If a Non-Generac Power Systems, Inc. Transfer Switch is substituted for use and directly causes damage to the generator set, no warranty coverage shall apply.
- All warranty expense allowances are subject to the conditions defined in Generac Power Systems Warranty, Policies, and Procedures Flat Rate Manual.
- Units that have been resold are not covered under the Generac Power Systems Warranty, as this Warranty is not transferable.
- Unit enclosure is only covered against rust or corrosion the first year of the warranty provision.
- Use of Non-Generac replacement part(s) will void the warranty in its entirety.
- Engine coolant heaters (block-heaters), heater controls and circulating pumps after the first year.

THIS WARRANTY SHALL NOT APPLY TO THE FOLLOWING:

1. Any unit built/manufactured prior to July 1, 2004.
2. Costs of normal maintenance (i.e. tune-ups, associated part(s), adjustments, loose/leaking clamps, installation and start-up).
3. Any failure caused by contaminated fuels, oils, coolants/antifreeze or lack of proper fuels, oils or coolants/antifreeze.
4. Units sold, rated or used for "Prime Power", "Trailer Mounted" or "Rental Unit" applications as Generac Power Systems have defined Prime Power, Trailer Mounted or Rental Unit. Contact a Generac Power Systems Distributor for Prime Power, Trailer Mounted or Rental Unit definition and warranty.
5. Failures caused by any external cause or act of God such as, but not limited to, collision, fire, theft, freezing, vandalism, riot or wars, lightning, earthquake, windstorm, hail, volcanic eruption, water or flood, tornado, hurricane, terrorist acts or nuclear holocaust.
6. Products that are modified or altered in a manner not authorized by Generac Power Systems in writing.
7. Failures due, but not limited to, normal wear and tear, accident, misuse, abuse, negligence, or improper installation or sizing.
8. Any incidental, consequential or indirect damages caused by defects in materials or workmanship, or any delay in repair or replacement of the defective part(s).
9. Damage related to rodent and/or insect infestation.
10. Failure due to misapplication, misrepresentation, or bi-fuel conversion.
11. Telephone, facsimile, cell phone, satellite, Internet, or any other communication expenses.
12. Rental equipment used while warranty repairs are being performed (i.e. rental generators, cranes, etc.).
13. Overtime, holiday, or emergency labor.
14. Modes of transportation deemed abnormal (refer to Generac Power Systems Warranty, Policies, Procedures and Flat Rate Manual).
15. Steel enclosures that are rusting due to improper installation, location in a harsh or saltwater environment or scratched where integrity of paint applied is compromised.
16. Any and all expenses incurred investigating performance complaints unless defective Generac materials and/or workmanship were the direct cause of the problem.
17. Starting batteries, fuses, light bulbs, engine fluids, and overnight freight cost for replacement part(s).

THIS WARRANTY IS IN PLACE OF ALL OTHER WARRANTIES, EXPRESSED OR IMPLIED, SPECIFICALLY, GENERAC POWER SYSTEMS MAKES NO OTHER WARRANTIES AS TO THE MERCHANTABILITY OR FITNESS FOR A PARTICULAR PURPOSE. Some states do not allow limitations on how long an implied warranty lasts, so the above limitation may not apply to purchaser/owner.

GENERAC POWER SYSTEMS ONLY LIABILITY SHALL BE THE REPAIR OR REPLACEMENT OF PART(S) AS STATED ABOVE. IN NO EVENT SHALL GENERAC POWER SYSTEMS BE LIABLE FOR ANY INCIDENTAL, OR CONSEQUENTIAL DAMAGES, EVEN IF SUCH DAMAGES ARE A DIRECT RESULT OF GENERAC POWER SYSTEMS, INC. NEGLIGENCE.

Some states do not allow the exclusion or limitation of incidental or consequential damages, so the above limitations may not apply to purchaser/owner. Purchaser/owner agrees to make no claims against Generac Power Systems, Inc. based on negligence. This warranty gives purchaser/owner specific legal rights. Purchaser/owner also may have other rights that vary from state to state.

Generac Power Systems, Inc. · P.O. Box 8 · Waukesha, WI 53187
Ph: (262) 544-4811 · Fax: (262) 544-4851

Bulletin 0166550SBY / Printed in U.S.A. 6.04