WEIGHT DATA
3.0L 50KW - 721KG (1590 LB) (A) 3.9L 70KW - 800KG (1764 LB)
WOODEN SHIPPING SKIDS INCREASE OVERALL WEIGHT - 79 KG (175 LB)

NOTES:

1) MINIMUM RECOMMENDED CONCRETE PAD SIZE: 1460 (57.5") WIDE X 2860 (112.6") LONG. REFERENCE INSTALLATION GUIDE P/N OF5298 FOR CONCRETE PAD REINFORCEMENT AND PAD DEPTH GUIDELINES.

2) GENERATOR MUST BE LOCATED A MINIMUM DISTANCE OF 5 FEET FROM A WALL OR FENCE. ALLOW A 5 FOOT MINIMUM PERIMETER OF OPEN SPACE AROUND THE ENTIRE GENERATOR. REFERENCE INSTALLATION GUIDE P/N OF5298 FOR OUTDOOR ROOF MOUNTED APPLICATIONS.

3) CIRCUIT BREAKER INFORMATION: SEE SPECIFICATION SHEET WITHIN OWNERS MANUAL.

4) INSIDE STUB-UP AREA FOR AC LOAD LEAD CONDUIT CONNECTION, NEUTRAL CONNECTION, BATTERY CHARGER 120 VOLT AC (.5 AMP MAX.) CONNECTION, AND ACCESS TO TRANSFER SWITCH CONTROL WIRES, REMOVE FRONT COVER FOR ACCESS.

4A) FIELD CUT HOLE IS ONLY REQUIRED FOR MOUNTING OF GENERATOR ON AN EXISTING PAD.

5) REFERENCE OWNERS MANUAL FOR LIFTING WARNINGS.

6) REMOVE EITHER LEFT OR RIGHT HAND SIDE PANEL TO ACCESS EXHAUST MUFFLER AND FAN BELT.

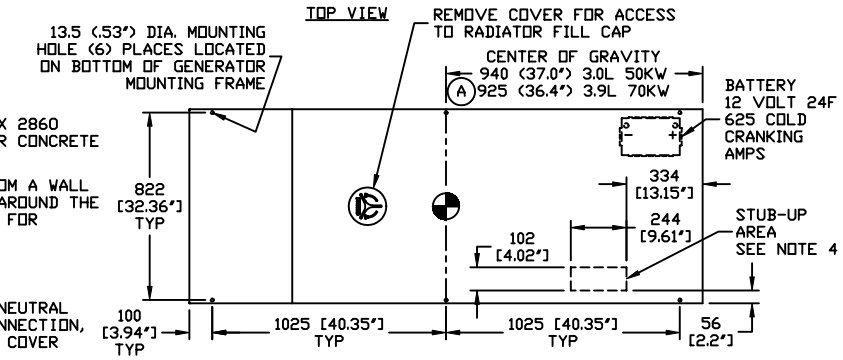

SERVICE ITEM ACCESSIBILITY CHART

SERVICE ITEM	3.0L 50KW	3.9L 70KW
OIL FILL CAP	LOCATED ON LEFT VALVE COVER, ACCESSIBLE THRU LEFT DOOR	
OIL DIP STICK	THRU LEFT DOOR	THRU RIGHT DOOR
OIL FILTER	THRU LEFT DOOR	THRU RIGHT DOOR
OIL DRAIN HOSE	THRU LEFT DOOR	THRU LEFT DOOR
RADIATOR DRAIN HOSE	THRU RIGHT DOOR	THRU RIGHT DOOR
AIR CLEANER ELEMENT	EITHER DOOR	EITHER DOOR
SPARK PLUGS	BOTH DOORS	BOTH DOORS
MUFFLERS	SEE NOTE 6	SEE NOTE 6
FAN BELT	SEE NOTE 6	SEE NOTE 6
BATTERY	THRU RIGHT DOOR	THRU RIGHT DOOR
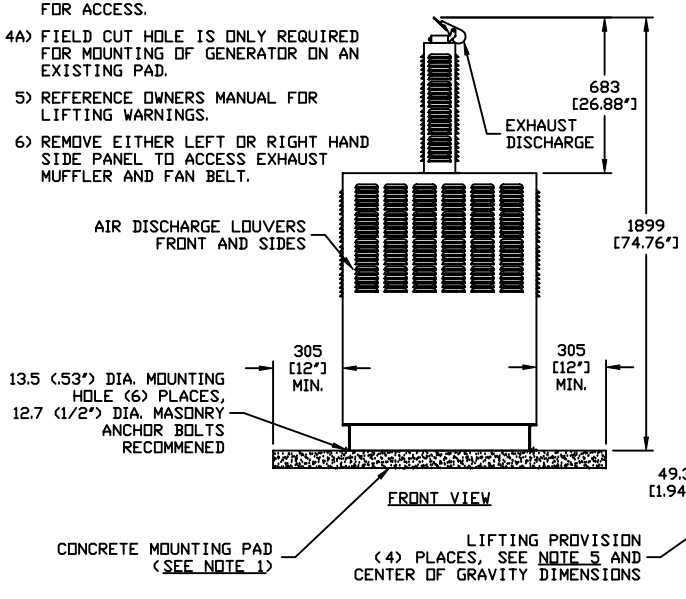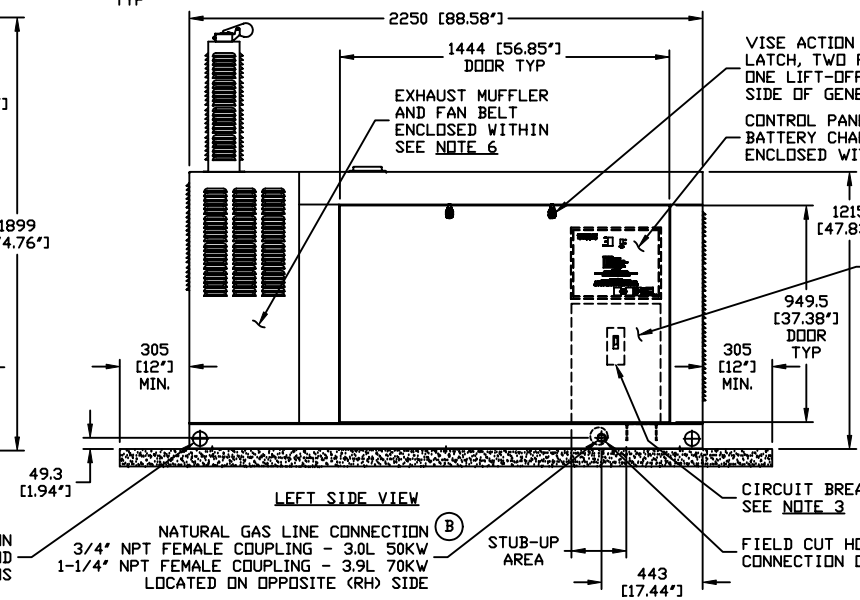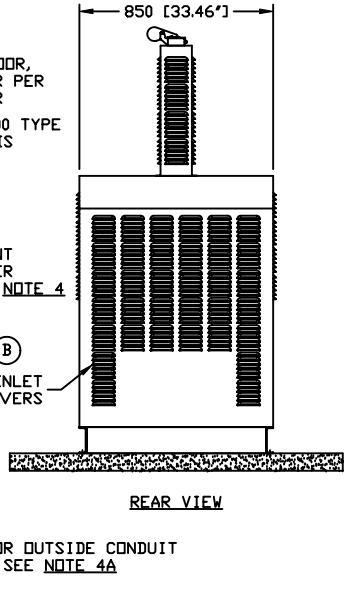
REFERENCE OWNERS MANUAL FOR PERIODIC REPLACEMENT PART LISTINGS