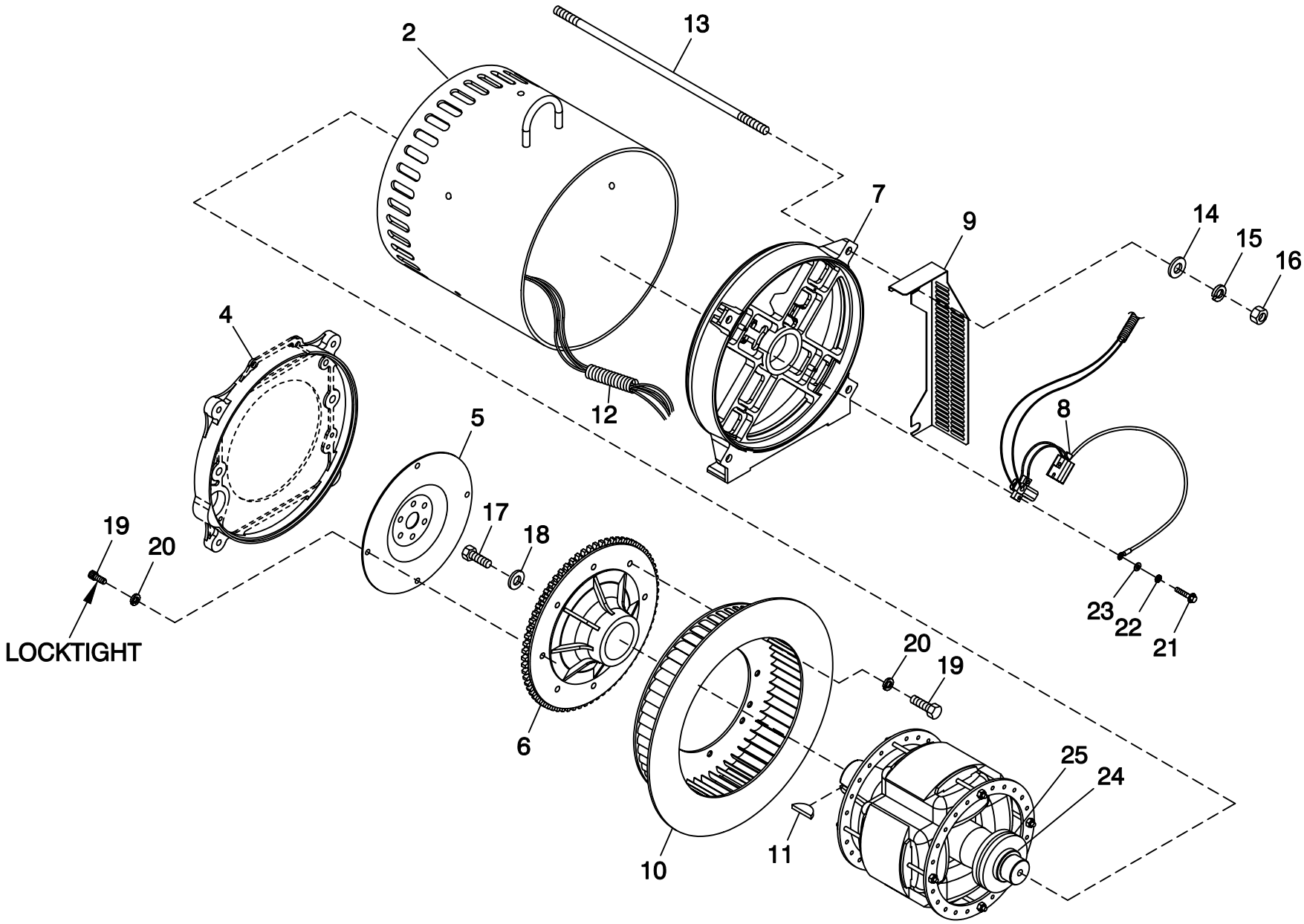

EXPLODED VIEW:
CPL ALTERNATOR DIRECT EXCITATION
DRAWING #: 0F4779

REVISION: G-6908-D
DATE: 11/18/05

EXPLODED VIEW: CPL ALTERNATOR DIRECT EXCITATION
DRAWING #: 0F4779

GROUP A

APPLICABLE TO:

ITEM	PART #	QTY.	DESCRIPTION
1	0F3438	1	RTR 390 30AD1 CPL
	0F3440	1	RTR 390 40AD2 CPL HI-EF
	0F6188	1	ASSY RTR 390 30KD1 CPL
	0F6190	1	ASSY RTR 390 40KD2 CPL
2	0F3439	1	STR 390 30AD1 CPL
	0F3441	1	STR 390 40AD2 CPL
	0F6189	1	STR 390 30GD1 CPL
	0F6199	1	STR 390 40GD2 CPL
	0F6655	1	ASSY STR 390 30KD1 CPL
	0F6656	1	ASSY STR 390 40KD2 CPL
3	0C9708	1	INSTR HYPOT TEST
4	SEE ENGINE EV	REF	ENGINE ADAPTER
5	SEE ENGINE EV	REF	FLEXPLATE
6	0F5536	1	ASSY FLYWHEEL C2 CPL
7	0E5706	1	REAR BEARING CARRIER 390/DRCT
8	0F7874	1	ASSY BRUSH HOLDER 390/HSB
9	0F6124	1	GUARD REAR BEARING CARRIER CPL 3.0L 30KW
	0F6123	1	GUARD REAR BEARING CARRIER CPL 3.9L 40KW
10	0E6076	1	REVCOR FAN 12.63 X 2 W/PRESSDISK
11	023454	1	KEY WOODRUFF #E
12	077043F	1	CONDUIT FLEX 1-1/4" (30" LG)
13	04576100BU	4	STUD M14-2.0 570 G5 ZINC (30KW)
	04576100AQ	4	STUD M14-2.0 X 615 G5 ZINC
14	052646	4	WASHER FLAT M14
15	043123	4	WASHER LOCK M14
16	051779	4	NUT HEX M14-2.0 G8 YEL CHR
17	0A2601	1	SCREW HHC M16-2.0 X 45 G8.8
18	0A2602	1	WASHER FLAT .688 ID X 3.25 OD
19	0F3398	8	SCREW SHC M10-1.5 X 16 G10.9
20	046526	8	WASHER LOCK M10
21	0C3993	4	SCREW HHTT M4-0.7 X 25 BP
22	022264	4	WASHER LOCK #8-M4
23	038150	4	WASHER FLAT #8 ZINC
24 *	047248	1	BALL BEARING-45 MM
25 *	070892	1	SLIP RING MACHINED

* ROTOR REPLACEMENT PARTS