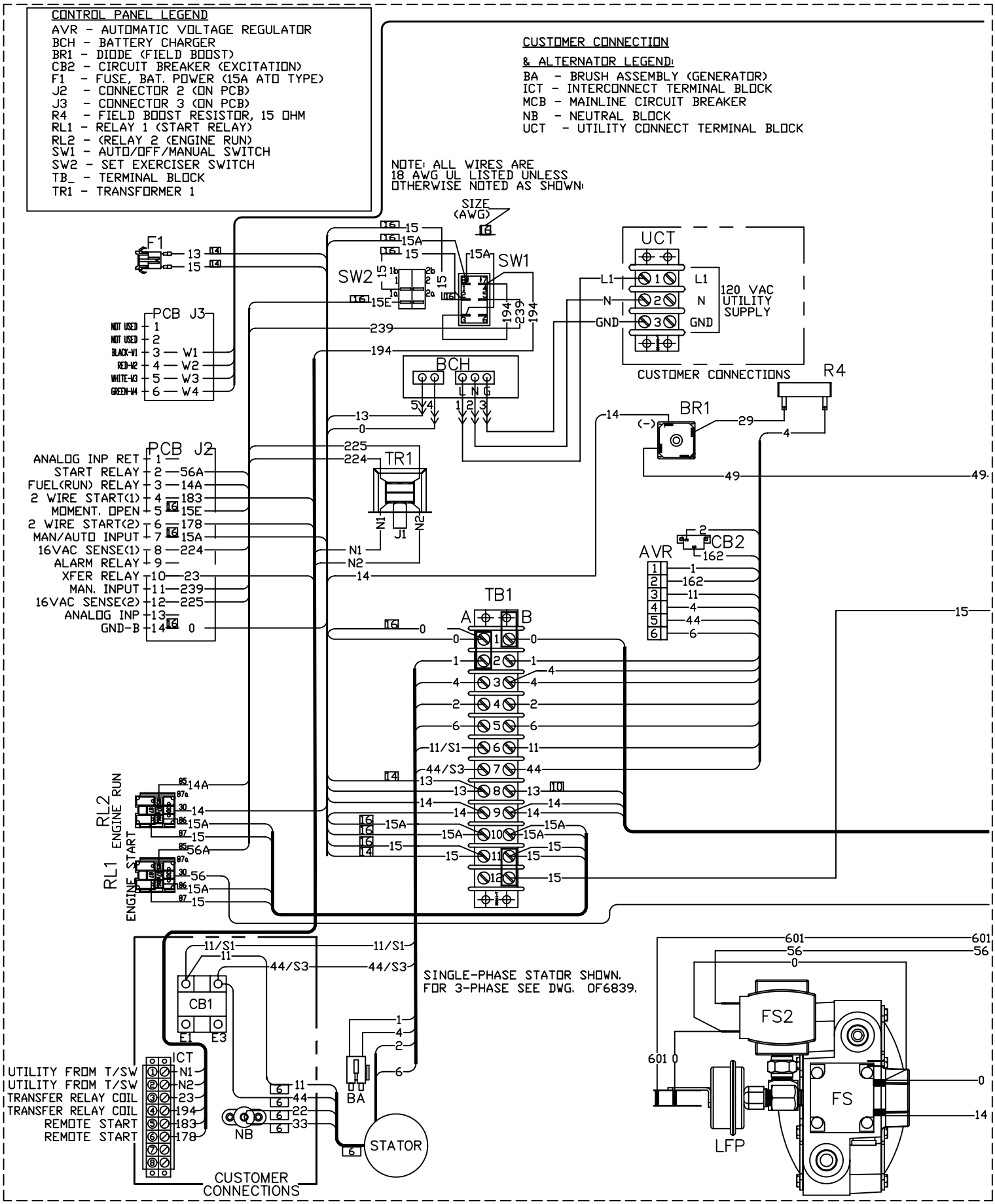

WIRING - DIAGRAM

2.5L COMMERCIAL PROD LINE

DRAWING #: 0F7104

REVISION: *

DATE: 05/23/05

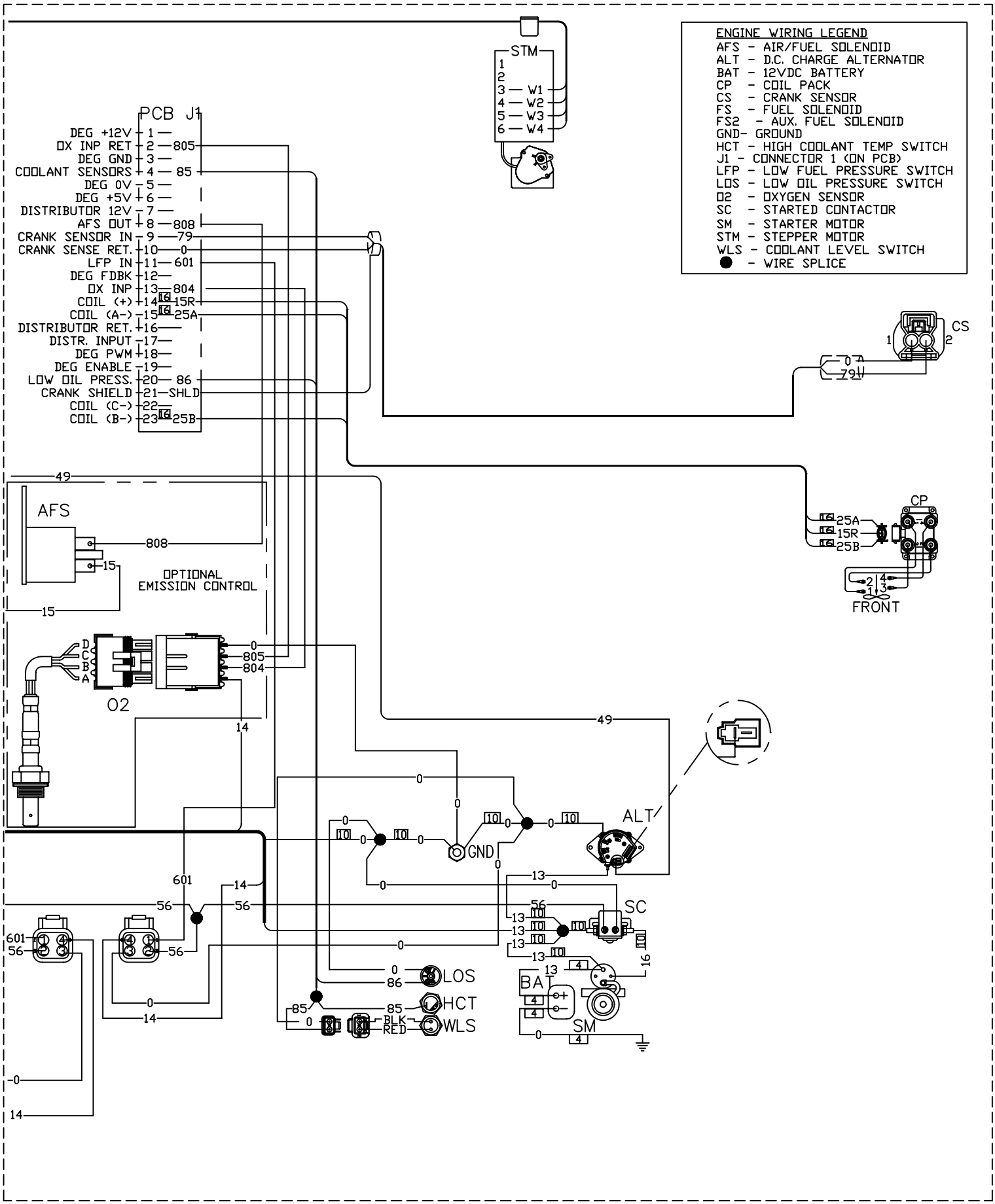
ENGINE WIRING LEGEND
AFS - AIR/FUEL SOLENOID
ALT - D.C. CHARGE ALTERNATOR
BAT - 12VDC BATTERY
CP - COIL PACK
CS - CRANK SENSOR
FS - FUEL SOLENOID
FS2 - AUX. FUEL SOLENOID
GND- GROUND
HCT - HIGH COOLANT TEMP SWITCH
J1 - CONNECTOR 1 (ON PCB)
LFP - LOW FUEL PRESSURE SWITCH
LOS - LOW OIL PRESSURE SWITCH
O2 - OXYGEN SENSOR
SC - STARTED CONTACTOR
SM - STARTER MOTOR
STM - STEPPER MOTOR
WLS - COOLANT LEVEL SWITCH
● - WIRE SPLICE
STM
W1
W2
W3
W4
PCB J1
DEG +12V 1
OX INP RET 2 805
DEG GND 3
COOLANT SENSORS 4 85
DEG 0V 5
DEG +5V 6
DISTRIBUTOR 12V 7
AFS OUT 8 808
CRANK SENSOR IN 9 79
CRANK SENSE RET. 10 0
LFP IN 11 601
DEG FDBK 12
OX INP 13 804
COIL (+) 14 15R
COIL (A-) 15 25A
DISTRIBUTOR RET. 16
DISTR. INPUT 17
DEG PWM 18
DEG ENABLE 19
LOW OIL PRESS. 20 86
CRANK SHIELD 21 SHLD
COIL (C-) 22
COIL (B-) 23 25B
CS
AFS
OPTIONAL
EMISSION CONTROL
O2
CP
FRONT
ALT
GND
SC
BAT
SM
LOS
HCT
WLS
BLK
RED