GROUP D

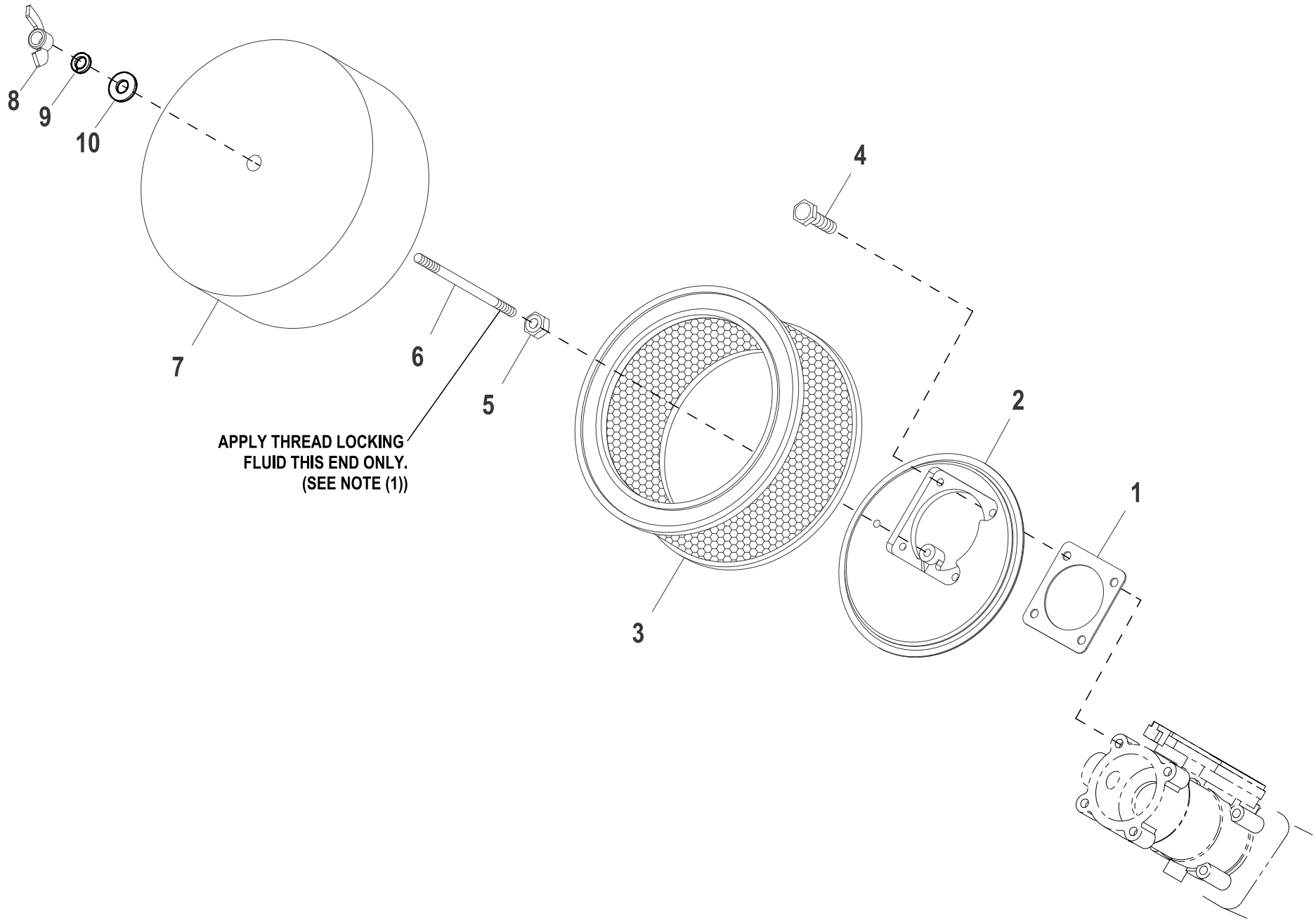

Revision : J-8527-B
Date : 5/7/14

Exploded View : EV AIR CLEANER
Drawing No. : 0F9809

EXPLODED VIEW: EV AIR CLEANER

DRAWING #: 0F9809

GROUP D

ITEM	PART#	QTY.	DESCRIPTION
1	0E6586	1	GASKET BOSCH 32 & 40
2	0E0519A	1	ADAPTER CARBURETOR W/PVC CONN
3	0C8127	1	ELEMENT AIR CLEANER
4	049815	4	SCREW HHC M5-0.8 X 16 G8.8
5	022127	1	NUT HEX 1/4-20 STEEL
(1) 6	062974	1	STUD TH 1/4-20 X 4-1/2 G2 ZNC
7	0G0190	1	PLATE, AIR CLEANER TOP 2.4L
8	025870	1	NUT WING 1/4-20
9	022097	1	WASHER LOCK M6-1/4
10	022473	1	WASHER FLAT 1/4-M6 ZINC

(1) APPLY MEDIUM STRENGTH BLUE THREAD LOCKING FLUID TO THREADS.

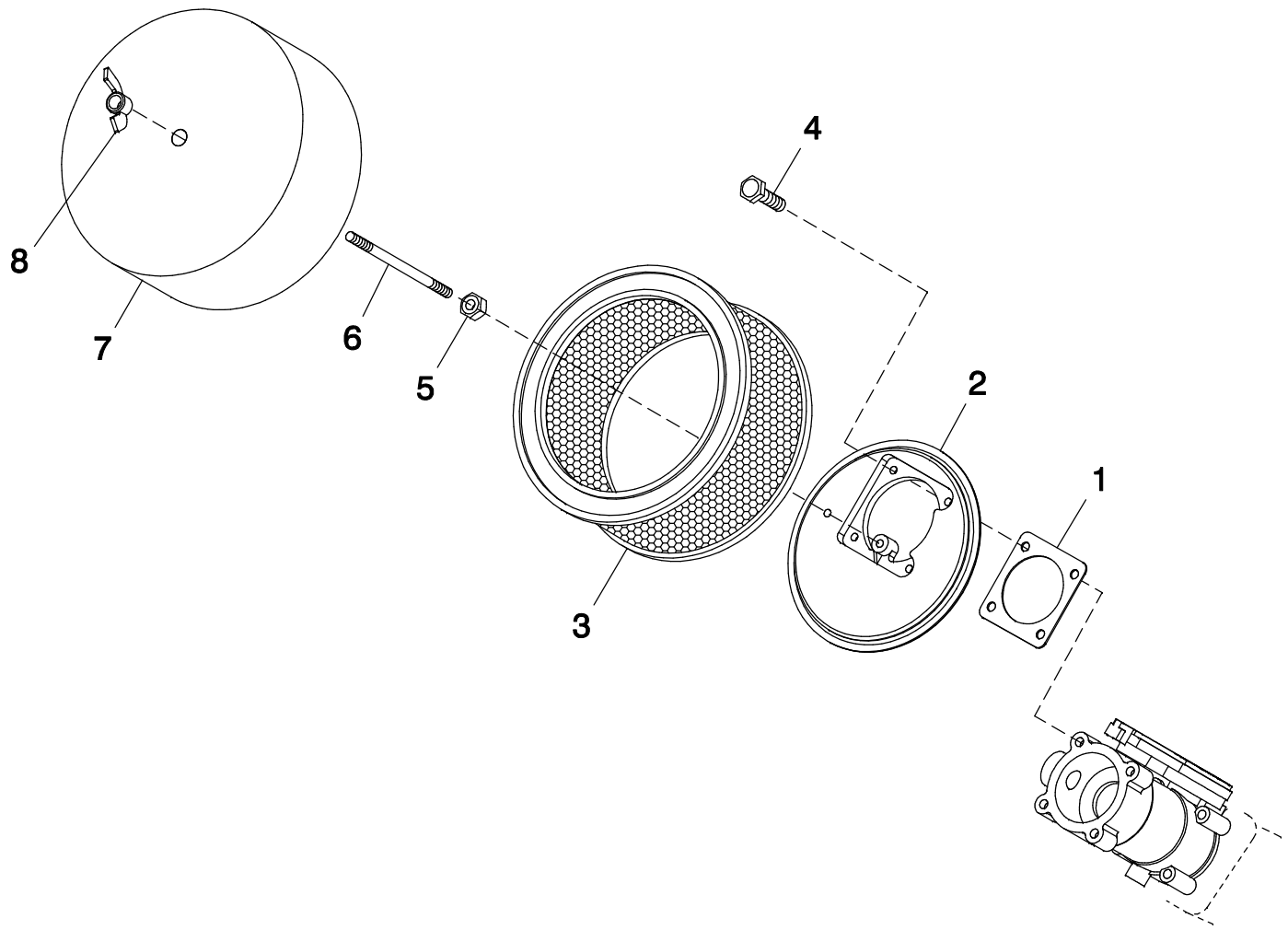

EXPLODED VIEW:
AIR CLEANER C2
DRAWING #: 0F9809

REVISION: H-1248-A
DATE: 10/18/07

EXPLODED VIEW: AIR CLEANER C2
DRAWING #: 0F9809

GROUP D

APPLICABLE TO:

ITEM	PART #	QTY.	DESCRIPTION
1	0E6586	1	GASKET BOSCH 32 & 40
2	0E0519A	1	ADAPTER CARBURETOR W/PVC CONN
3	0C8127	1	ELEMENT AIR CLEANER
4	049815	4	SCREW HHC M5-0.8 X 16 G8.8
5	022127	1	NUT HEX 1/4-20 STEEL
(1) 6	062974	1	STUD TH 1/4-20 X 4-1/2 G2 ZNC
7	0G0190	1	PLATE, AIR CLEANER TOP 2.4L
8	037561	1	NUT WING 1/4-20 NYLK

(1) APPLY MEDIUM STRENGTH BLUE TREAD LOCKING FLUID TO THREADS ON ONE END OF I/N 6 (STUD) THAT SCREWS INTO I/N 2 (CARB ADAPTER).