Serial Number

QT
2.5L
25kW
Model: 005214-0

STANDBY GENERATOR
OWNER'S MANUAL

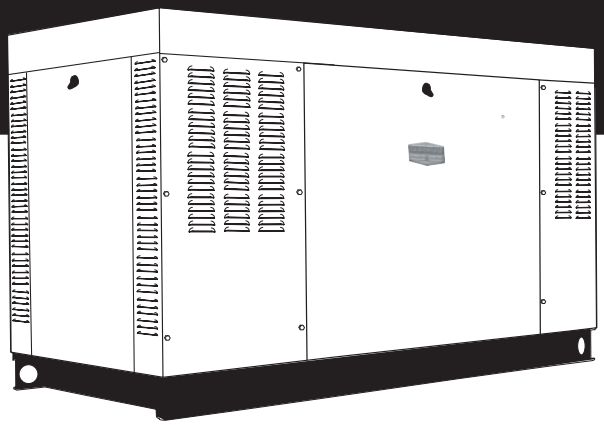

A new standard of reliability

CENTURION

⚠ Not intended for use in critical life support applications. ⚠

— ⚠ CAUTION ⚠ —

ONLY QUALIFIED ELECTRICIANS OR CONTRACTORSSHOULD ATTEMPT INSTALLATION!

DEADLY EXHAUST FUMES. OUTDOOR INSTALLATION ONLY!

This manual should remain with the unit.

Standby Generator Sets
Table of Contents

TABLE OF CONTENTS

SECTION **PAGE**

SAFETY RULES **1-1**
INTRODUCTION **1-3**
Read this Manual Thoroughly 1-3
Operation and Maintenance 1-3
How to Obtain Service 1-3
IDENTIFICATION RECORD **2-1**
Data Label 2-1
EQUIPMENT DESCRIPTION **3-1**
Equipment Description 3-1
Engine Oil Recommendations 3-1
Coolant Recommendations 3-1
ENGINE PROTECTIVE DEVICES **4-1**
High Coolant Temperature Switch 4-1
Low Coolant Level Sensor 4-1
Low Oil Pressure Switch 4-1
Overcrank Shutdown 4-1
Overspeed Shutdown 4-1
RPM Sensor Loss Shutdown 4-1
DC Fuse 4-1
FUEL SYSTEMS **5-1**
Fuel Requirements 5-1
Natural Gas Fuel System 5-1
Propane Vapor Withdrawal Fuel System 5-1
LP Fuel System 5-1
SPECIFICATIONS **6-1**
Generator 6-1
Engine 6-1
Cooling System 6-1
Fuel System 6-1
Electrical System 6-1
Cold Weather Kit 6-2
Reconfiguring the Fuel System 6-2
GENERAL INFORMATION **7-1**
Generator AC Lead Connections 7-1
Four-lead, Single-phase Stator 7-1
Alternator Power Winding Connections 7-1
3-phase Alternators 7-1
INSTALLATION **8-1**
Installation 8-1
Preparation Before Start-up 8-1
Transfer Switch 8-1
Fuel System 8-1
Generator Set Lubrication 8-1
Prior to Initial Start-up 8-1
Engine Coolant 8-1
Belt Tension 8-1
Electrical System 8-1
Initial Inspection for QT Genset Start-up 8-1
Start-up Checklist 8-2
Preparation for Start-up 8-2
Start-up Inspection 8-2
OPERATION **9-1**
Generator Control and Operation 9-1
Operating Unit with Manual Transfer Switch 9-1
Engine Start-up and Transfer 9-1
Retransfer and Shutdown 9-1
Operating Unit with Automatic Transfer Switch 9-1
MAINTENANCE **10-1**
Maintenance Performed by Authorized Service Facilities 10-1
Every Three Months 10-1
Once Every Six Months 10-1
Once Annually 10-1
First 100 Operating Hours 10-1
Every 500 Operating Hours 10-1
Every 800 Operating Hours 10-1
Exhaust Manifold Procedure 10-1
Intake Manifold Procedure 10-1
Cylinder Head Procedure 10-1
Cooling System 10-2
Overload Protection for Engine DC Electrical System 10-2
Checking Fluid Levels 10-2
Check Engine Oil 10-2
Battery Fluid 10-2
Engine Coolant 10-2
Maintenance Owner/Operator Can Perform 10-3
Check Engine Oil Level 10-3
Check Battery 10-3
Exercise System 10-3
Inspect Cooling System 10-3
Check Engine Coolant Level 10-3
Perform Visual Inspection 10-3
Inspect Exhaust System 10-3
Check Fan Belt 10-3
Inspect Engine Governor 10-3
Changing Engine Oil 10-3
Changing the Engine Air Cleaner 10-3
Spark Plugs 10-4
Coolant Change 10-4
Miscellaneous Maintenance 10-4
Cleaning the Generator 10-4
Battery 10-4
Battery Maintenance 10-4
Battery Replacement 10-5
SERVICE SCHEDULE **11-1**
TROUBLESHOOTING **12-1**
Troubleshooting Guide 12-1
NOTES
EXPLODED VIEWS & PARTS LISTS
WIRING DIAGRAMS & SCHEMATICS
WARRANTY

SAVE THESE INSTRUCTIONS – The manufacturer suggests that these rules for safe operation be copied and posted in potential hazard areas. Safety should be stressed to all operators, potential operators, and service and repair technicians for this equipment.

WARNING:

The engine exhaust from this product contains chemicals known to the state of California to cause cancer, birth defects or other reproductive harm.

WARNING:

This product contains or emits chemicals known to the state of California to cause cancer, birth defects or other reproductive harm.

Study these SAFETY RULES carefully before installing, operating or servicing this equipment. Become familiar with this Owner's Manual and with the unit. The generator can operate safely, efficiently and reliably only if it is properly installed, operated and maintained. Many accidents are caused by failing to follow simple and fundamental rules or precautions.

The manufacturer cannot anticipate every possible circumstance that might involve a hazard. The warnings in this manual, and on tags and decals affixed to the unit are, therefore, not all inclusive. If a procedure, work method or operating technique is used that the manufacturer does not specifically recommend, ensure that it is safe for others. Also make sure the procedure, work method or operating technique utilized does not render the generator unsafe.

DANGER

Despite the safe design of this generator, operating this equipment imprudently, neglecting its maintenance or being careless can cause possible injury or death. Permit only responsible and capable persons to install, operate or maintain this equipment.

Potentially lethal voltages are generated by these machines. Ensure all steps are taken to render the machine safe before attempting to work on the generator.

Parts of the generator are rotating and/or hot during operation. Exercise care near running generators.

GENERAL HAZARDS

- For safety reasons, the manufacturer recommends that this equipment be installed, serviced and repaired by an Authorized Service Dealer or other competent, qualified electrician or installation technician who is familiar with applicable codes, standards and regulations. The operator also must comply with all such codes, standards and regulations.
- Installation, operation, servicing and repair of this (and related) equipment must always comply with applicable codes, standards, laws and regulations. Adhere strictly to local, state and national electrical and building codes. Comply with regulations the Occupational Safety and Health Administration (OSHA) has established. Also, ensure that the generator is installed, operated and serviced in accordance with the manufacturer's instructions and recommendations. Following installation, do nothing that might render the unit unsafe or in noncompliance with the aforementioned codes, standards, laws and regulations.
- The engine exhaust fumes contain carbon monoxide gas, which can be DEADLY. This dangerous gas, if breathed in sufficient concentrations, can cause unconsciousness or even death. For that reason, adequate ventilation must be provided. This should be considered prior to installing the generator. The unit should be positioned to direct exhaust gasses safely away from any building where people, animals, etc., will not be harmed. Any exhaust stacks that ship loose with the unit must be installed properly per the manufacturer's instruction, and in strict compliance with applicable codes and standards.
- Keep hands, feet, clothing, etc., away from drive belts, fans, and other moving or hot parts. Never remove any drive belt or fan guard while the unit is operating.
- Adequate, unobstructed flow of cooling and ventilating air is critical in any room or building housing the generator to prevent buildup of explosive gases and to ensure correct generator operation. Do not alter the installation or permit even partial blockage of ventilation provisions, as this can seriously affect safe operation of the generator.
- Keep the area around the generator clean and uncluttered. Remove any materials that could become hazardous.
- When working on this equipment, remain alert at all times. Never work on the equipment when physically or mentally fatigued.
- Inspect the generator regularly, and promptly repair or replace all worn, damaged or defective parts using only factory-approved parts.

- Before performing any maintenance on the generator, disconnect its battery cables to prevent accidental start-up. Disconnect the cable from the battery post indicated by a NEGATIVE, NEG or (–) first. Reconnect that cable last.
- Never use the generator or any of its parts as a step. Stepping on the unit can stress and break parts, and may result in dangerous operating conditions from leaking exhaust gases, fuel leakage, oil leakage, etc.

⚠ ELECTRICAL HAZARDS ⚠

- All generators covered by this manual produce dangerous electrical voltages and can cause fatal electrical shock. Utility power delivers extremely high and dangerous voltages to the transfer switch as well as the standby generator. Avoid contact with bare wires, terminals, connections, etc., on the generator as well as the transfer switch, if applicable. Ensure all appropriate covers, guards and barriers are in place before operating the generator. If work must be done around an operating unit, stand on an insulated, dry surface to reduce shock hazard.
- Do not handle any kind of electrical device while standing in water, while barefoot, or while hands or feet are wet. DANGEROUS ELECTRICAL SHOCK MAY RESULT.
- If personnel must stand on metal or concrete while installing, operating, servicing, adjusting or repairing this equipment, place insulative mats over a dry wooden platform. Work on the equipment only while standing on such insulative mats.
- The National Electrical Code (NEC) requires the frame and external electrically conductive parts of the generator to be connected to an approved earth ground. This grounding will help prevent dangerous electrical shock that might be caused by a ground fault condition in the generator set or by static electricity. Never disconnect the ground wire.
- Wire gauge sizes of electrical wiring, cables and cord sets must be adequate to handle the maximum electrical current (ampacity) to which they will be subjected.
- Before installing or servicing this (and related) equipment, make sure that all power voltage supplies are positively turned off at their source. Failure to do so will result in hazardous and possibly fatal electrical shock.
- Connecting this unit to an electrical system normally supplied by an electric utility shall be by means of a transfer switch so as to isolate the generator electric system from the electric utility distribution system when the generator is operating. Failure to isolate the two electric system power sources from each other by such means will result in damage to the generator and may also result in injury or death to utility power workers due to backfeed of electrical energy.
- Generators installed with an automatic transfer switch will crank and start automatically when normal (utility) source voltage is removed or is below an acceptable preset level. To prevent such automatic start-up and possible injury to personnel, disable the generator's automatic start circuit (battery cables, etc.) before working on or around the unit. Then, place a "Do Not Operate" tag on the generator control panel and on the transfer switch.
- In case of accident caused by electric shock, immediately shut down the source of electrical power. If this is not possible, attempt to free the victim from the live conductor. AVOID DIRECT CONTACT WITH THE VICTIM. Use a nonconducting implement, such as a dry rope or board, to free the victim from the live conductor. If the victim is unconscious, apply first aid and get immediate medical help.
- Never wear jewelry when working on this equipment. Jewelry can conduct electricity resulting in electric shock, or may get caught in moving components causing injury.

⚠ FIRE HAZARDS ⚠

- Keep a fire extinguisher near the generator at all times. Do NOT use any carbon tetra-chloride type extinguisher. Its fumes are toxic, and the liquid can deteriorate wiring insulation. Keep the extinguisher properly charged and be familiar with its use. If there are any questions pertaining to fire extinguishers, consult the local fire department.

⚠ EXPLOSION HAZARDS ⚠

- Properly ventilate any room or building housing the generator to prevent build-up of explosive gas.
- Do not smoke around the generator. Wipe up any fuel or oil spills immediately. Ensure that no combustible materials are left in the generator compartment, or on or near the generator, as FIRE or EXPLOSION may result. Keep the area surrounding the generator clean and free from debris.
- These generator sets may operate using one of several types of fuels. All fuel types are potentially FLAMMABLE and/or EXPLOSIVE and should be handled with care. Comply with all laws regulating the storage and handling of fuels. Inspect the unit's fuel system frequently and correct any leaks immediately. Fuel supply lines must be properly installed, purged and leak tested according to applicable fuel-gas codes before placing this equipment into service.
- Diesel fuels are highly FLAMMABLE. Gaseous fluids such as natural gas and liquid propane (LP) gas are extremely EXPLOSIVE. Natural gas is lighter than air, and LP gas is heavier than air; install leak detectors accordingly.

INTRODUCTION

Thank you for purchasing this model of the standby generator set product line.

Every effort was expended to make sure that the information and instructions in this manual were both accurate and current at the time the manual was written. However, the manufacturer reserves the right to change, alter or otherwise improve this product(s) at any time without prior notice.

◆ READ THIS MANUAL THOROUGHLY

If any portion of this manual is not understood, contact the nearest Authorized Service Dealer for starting, operating and servicing procedures.

Throughout this publication, and on tags and decals affixed to the generator, DANGER, WARNING, CAUTION and NOTE blocks are used to alert personnel to special instructions about a particular service or operation that may be hazardous if performed incorrectly or carelessly. Observe them carefully. Their definitions are as follows:

DANGER

After this heading, read instructions that, if not strictly complied with, will result in serious personal injury, including death, or property damage.

WARNING

After this heading, read instructions that, if not strictly complied with, may result in personal injury or property damage.

CAUTION

After this heading, read instructions that, if not strictly complied with, could result in damage to equipment and/or property.

NOTE:

After this heading, read explanatory statements that require special emphasis.

These safety warnings cannot eliminate the hazards that they indicate. Common sense and strict compliance with the special instructions while performing the service are essential to preventing accidents.

Four commonly used safety symbols accompany the DANGER, WARNING and CAUTION blocks. The type of information each indicates is as follows:

This symbol points out important safety information that, if not followed, could endanger personal safety and/or property of others.

This symbol points out potential explosion hazard.

This symbol points out potential fire hazard.

This symbol points out potential electrical shock hazard.

The operator is responsible for proper and safe use of the equipment. The manufacturer strongly recommends that the operator read this Owner's Manual and thoroughly understand all instructions before using this equipment. The manufacturer also strongly recommends instructing other users to properly start and operate the unit. This prepares them if they need to operate the equipment in an emergency.

◆ OPERATION AND MAINTENANCE

It is the operator's responsibility to perform all safety checks, to make sure that all maintenance for safe operation is performed promptly, and to have the equipment checked periodically by an Authorized Service Dealer. Normal maintenance service and replacement of parts are the responsibility of the owner/operator and, as such, are not considered defects in materials or workmanship within the terms of the warranty. Individual operating habits and usage contribute to the need for maintenance service.

Proper maintenance and care of the generator ensure a minimum number of problems and keep operating expenses at a minimum. See an Authorized Service Dealer for service aids and accessories.

Operating instructions presented in this manual assume that the standby electric system has been installed by an Authorized Service Dealer or other competent, qualified contractor. Installation of this equipment is not a “do-it-yourself” project.

◆ HOW TO OBTAIN SERVICE

When the generator requires servicing or repairs, simply contact an Authorized Service Dealer for assistance. Service technicians are factory-trained and are capable of handling all service needs.

When contacting an Authorized Service Dealer or the factory about parts and service, always supply the complete model number of the unit as given on the front cover of this manual or on the DATA LABEL affixed to the unit.

AUTHORIZED SERVICE DEALER LOCATION

To locate the nearest AUTHORIZED SERVICE DEALER, please call this number:

1-800-333-1322

or locate us on the web at:

www.generac.com

IDENTIFICATION RECORD

◆ DATA LABEL

Every generator set has a DATA LABEL that contains important information pertinent to the generator. The data label, which can be found attached to the generator's lower connection box, lists the unit's serial number and its rated voltage, amps, wattage capacity, phase, frequency, rpm, power factor, etc.

NOTE:

For actual information related to this particular model, please refer to the Manual Drawing Listing located at the end of this manual, or to the data label affixed to the unit.

✦ Generator Model and Serial Number

This number is the key to numerous engineering and manufacturing details pertaining to your unit. Always supply this number when requesting service, ordering parts or seeking information.

Data Label

GENERATOR SET DATA MADE IN USA

MODEL ____ SERIAL ____

RATED KW ____ RATED KVA ____ PHASE ____

RATED VOLTAGE ____ RATED AMPS ____

POWER FACTOR ____ HERTZ ____ ALT RPM ____

ENGINE RPM ____ PRODUCTION DATE ____

ALTERNATOR SUBTRANSIENT REACTANCE ____

ALTERNATOR TRANSIENT REACTANCE ____

CLASS ☐ ROTOR ☐ STATOR WINDING INSULATION AT 25°C AMBIENT

GENERAC POWER SYSTEMS, INC.

EQUIPMENT DESCRIPTION

This equipment is a revolving field, alternating current generator set. It is powered by a gaseous fueled engine operating at 1800 rpm for 4-pole direct drive units, 3600 rpm for 2-pole direct drive units and 2300 - 3000 rpm for quiet drive gear units. See the Specifications section for exact numbers. The unit comes complete with a sound attenuated enclosure, internally mounted muffler, control console, mainline circuit breaker, battery charger, and protective alarms as explained in the following paragraph.

All AC connections, including the power leads from the alternator, 120 volt battery charger input and control connections to the transfer switch are available in the main connection box.

The generator incorporates the following generator features:

- Rotor and Stator insulation is Class H rated as defined by NEMA MG1-32.6, NEMA MG1-1.66. The generator is self ventilated and drip-proof constructed.
- The voltage waveform deviation, total harmonic content of the AC waveform and telephone influence factor have been evaluated and are acceptable according to NEMA MG1-32.

ENGINE OIL RECOMMENDATIONS

The unit has been filled with 15W-40 engine oil at the factory. Use a high-quality detergent oil classified "For Service SJ or SH." Detergent oils keep the engine cleaner and reduce carbon deposits. Use oil having the following SAE viscosity rating, based on the ambient temperature range anticipated before the next oil change:

Temperature	Oil Grade (Recommended)
Above 80° F (27° C)	SAE 30W or 15W-40
32° to 80° F (0° to 27° C)	SAE 20W-20 or 15W-40
Below 32° F (0° C)	See Note

CAUTION

Any attempt to crank or start the engine before it has been properly serviced with the recommended oil may result in an engine failure.

NOTE:

For temperatures below 32° F, it is strongly recommended to use the optional Cold Weather Start Kit (part number listed in the Specification Section). The oil grade for temperatures below 32° F is 5W-30 synthetic oil.

COOLANT RECOMMENDATIONS

Use a mixture of half low silicate ethylene glycol base anti-freeze and deionized water. Cooling system capacity is listed in the specifications. Use only deionized water and only low silicate anti-freeze. If desired, add a high quality rust inhibitor to the recommended coolant mixture. When adding coolant, always add the recommended 50-50 mixture.

CAUTION

Do not use any chromate base rust inhibitor with ethylene glycol base anti-freeze or chromium hydroxide ("green slime") forms and will cause overheating. Engines that have been operated with a chromate base rust inhibitor must be chemically cleaned before adding ethylene glycol base anti-freeze. Using any high silicate anti-freeze boosters or additives will also cause overheating. The manufacturer also recommends that any soluble oil inhibitor is NOT used for this equipment.

DANGER

Do not remove the radiator pressure cap while the engine is hot or serious burns from boiling liquid or steam could result.

Ethylene glycol base antifreeze is poisonous. Do not use mouth to siphon coolant from the radiator, recovery bottle or any container. Wash hands thoroughly after handling. Never store used antifreeze in an open container because animals are attracted to the smell and taste of antifreeze even though it is poisonous to them.

ENGINE PROTECTIVE DEVICES

The standby generator may be required to operate for long periods of time without an operator on hand to monitor such engine conditions as coolant temperature, oil pressure or rpm. For that reason, the engine has several devices designed to protect it against potentially damaging conditions by automatically shutting down the unit when the oil pressure is too low, the coolant temperature is too high, the coolant level is too low, or the engine is running too fast.

NOTE:

Engine protective switches and sensors are mentioned here for the reader's convenience. Also refer to the applicable control panel manual for additional automatic engine shutdown information.

◆ HIGH COOLANT TEMPERATURE SWITCH

The switch will close if the temperature should exceed approximately 140° C (284° F), initiating an engine shutdown. The generator will automatically restart and the LED will reset once the temperature has returned to a safe operating level.

◆ LOW COOLANT LEVEL SENSOR

To prevent overheating, the engine has a low coolant level sensor. If the level of engine coolant drops below the level of the low coolant level sensor, the engine automatically shuts down.

◆ LOW OIL PRESSURE SWITCH

This switch has normally closed contacts that are held open by engine oil pressure during cranking and operating. Should oil pressure drop below the 8 psi range, switch contacts close, and the engine shuts down. The unit should not be restarted until oil is added, and the AUTO/OFF/MANUAL switch must be turned to OFF and then back to AUTO.

◆ OVERCRANK SHUTDOWN

After a prespecified duration of cranking, this function ends the cranking if the engine has failed to start. The overcrank LED will turn ON. Turn OFF the AUTO/OFF/MANUAL switch, then turn switch back to AUTO to reset the generator control board.

NOTE:

If the fault is not corrected, the overcrank feature will continue to activate.

Approximate Crank Cycle Times

- 15 seconds ON
- 7 seconds OFF
- 7 seconds ON
- 7 seconds OFF
- Repeat for 45 seconds
  Approximately 90 seconds total.

◆ OVERSPEED SHUTDOWN

A speed circuit controls engine cranking, start-up, operation and shutdown. Engine speed signals are delivered to the circuit board whenever the unit is running. Should the engine overspeed above a safe, preset value, the circuit board initiates an automatic engine shutdown. Contact the nearest Authorized Dealer if this failure occurs.

◆ RPM SENSOR LOSS SHUTDOWN

If the speed signal to the control panel is lost, engine shutdown will occur.

◆ DC FUSES

Fuse F1 (15 amp) is located inside of the control panel. It protects the panel wiring and components from damaging overload. **Always remove this fuse before commencing work on the generator.** The unit will not start or crank if the fuse is blown.

Fuse F2 (25 amp) is located in the engine wire harness adjacent to the DC alternator. It is used to prevent circuit failure due to DC alternator falure. If this fuse is blown, battery charging will not occur while the engine is running. Replace these fuses with the same size, type, and rating. (See the exploded views and parts lists at the end of this manual for replacement part number.)

FUEL SYSTEM

◆ FUEL REQUIREMENTS

The standby generator may be equipped with one of the following fuel systems:

- Natural gas fuel system
- Propane vapor (PV) fuel system

The Manual Drawing Listing that is affixed to the unit includes the "Identification Code," which may be used to identify the type of fuel system installed on the unit.

Recommended fuels should have a Btu content of at least 1,000 Btu's per cubic foot for natural gas; or at least 2,520 Btu's per cubic foot for LP gas. Ask the fuel supplier for the Btu content of the fuel.

Required fuel pressure for **natural gas is 5 inches to 14 inches water column (0.18 to 0.5 psi); and for liquid propane, 5 inches to 14 inches of water column (0.18 to 0.5 psi).**

NOTE:

Any piping used to connect the generator to the fuel supply should be of adequate size to ensure the fuel pressure NEVER drops below five inches water column for natural gas or 5 inches water column for propane vapor for all load ranges.

NOTE:

It is the responsibility of the installer to make sure that only the correct recommended fuel is supplied to the generator fuel system. Thereafter, the owner/operator must make certain that only the proper fuel is supplied.

◆ NATURAL GAS FUEL SYSTEM

Natural gas is supplied in its vapor state. In most cases, the gas distribution company provides piping from the main gas distribution line to the standby generator site. The following information applies to natural gas fuel systems.

- Gas pressure in a building is usually regulated by national, state and local codes.
- To reduce gas pressure to a safe level before the gas enters a building, a primary regulator is needed. The natural gas supplier may or may not supply such a regulator.
- It is the responsibility of the gas supplier to make sure sufficient gas pressure is available to operate the primary regulator.
- Gas pressure at the inlet to the fuel shutoff solenoid should not exceed approximately 14 inches water column (0.5 psi). Optimum pressure at the fuel shutoff solenoid is 11 inches water column (0.4 psi).

◆ PROPANE VAPOR WITHDRAWAL FUEL SYSTEM

This type of system utilizes the vapors formed above the liquid fuel in the supply tank. Approximately 10 to 20 percent of the tank capacity is needed for fuel expansion from the liquid to the vapor state. The vapor withdrawal system is generally best suited for smaller engines that require less fuel. The installer should be aware of the following:

- When ambient temperatures are low and engine fuel consumption is high, the vapor withdrawal system may not function efficiently.
- Ambient temperatures around the supply tank must be high enough to sustain adequate vaporization, or the system will not deliver the needed fuel volume.
- In addition to the cooling effects of ambient air, the vaporization process itself provides an additional cooling effect.

◆ LP LIQUID FUEL SYSTEM

LP is supplied as a liquid in pressure tanks. It is usually made up of propane, butane, or a mixture of the two gases. Propane tends to vaporize readily even at temperatures as low as -20° F (-29° C). However, butane reverts to its liquid state when temperatures drop below 32° F (0° C).

LP in a liquid withdrawal system must be converted to its gaseous state before it is introduced into the engine carburetor. A vaporizer-converter is generally used to accomplish this. In such a converter, heated engine coolant is ported through the converter to provide the necessary heat for conversion of the fuel from a liquid to a gaseous state.

SPECIFICATIONS

◆ GENERATOR

Type ..... Synchronous
Rotor Insulation ..... Class H
Stator Insulation ..... Class H
Total Harmonic Distortion ..... < 3.5%
Telephone Interference Factor (TIF) ..... < 50
Alternator Output Leads 3-phase 4-wire
Bearings ..... Sealed Ball
Coupling ..... Flexible Disc
Load Capacity (Standby Rating) 25kW*

* NOTE: Generator rating and performance in accordance with ISO8528-5, BS5514, SAE J1349, ISO3046 and DIN 6271 Standards. KW rating is based on LPG fuel and may derate with natural gas.

Excitation System ..... Direct

Generator Output Voltage/kW - 60 Hz	kW	Amp	CB Size
120/240V, 1-phase, 1.0 pf	25	104	125
120/208V, 3-phase, 0.8 pf	25	85	100

Generator Locked Rotor KVA Available @ Voltage Dip of 35%
Single-phase or 208 3-phase ..... 38 KVA

◆ ENGINE

Make ..... Generac
Model ..... In Line
Cylinders and Arrangement 4
Displacement ..... 2.5 Liter
Bore ..... 3.78 in.
Stroke ..... 3.4 in.
Compression Ratio 9.4-to-1
Air Intake System ..... Naturally Aspirated
Valve Seats ..... Replaceable
Lifter Type ..... Overhead Cam Rocker Arm/Hydraulic Lifter

Engine Parameters

Rated Synchronous RPM ..... 60 Hz, 1800
HP at rated kW ..... 60 Hz, 40

Exhaust System

Exhaust Flow at Rated Output 60 Hz ..... 227 cfm
Exhaust Temperature at Rated Output ..... 1000° F

Combustion Air Requirements (Natural Gas)

Flow at rated power, 60 Hz ..... 67.5 cfm

Governor

Type ..... Electronic
Frequency Regulation ..... Isochronous
Steady State Regulation ..... ± 0.25%

Engine Lubrication System

Type of Oil Pump ..... Gear
Oil Filter ..... Full Flow Spin-on, Cartridge
Crankcase Oil Capacity ..... 4 U.S. qts.

◆ COOLING SYSTEM

Type ..... Pressurized Closed Recovery
Water Pump ..... Belt Driven
Fan Speed ..... 2090 rpm
Fan Diameter ..... 16 inches
Fan Mode ..... Pusher
Air Flow (inlet air including alternator and combustion air) ..... 1438 ft^3/min.
Coolant Capacity ..... (3.0 U.S. gal.)
Heat Rejection to Coolant ..... 95,000 Btu/h
Maximum Operating Air Temp. on Radiator ..... 60° C (150° F)
Maximum Ambient Temperature ..... 50° C (140° F)

◆ FUEL SYSTEM

Type of Fuel ..... Natural Gas, Propane Vapor
Carburetor ..... Down Draft
Secondary Fuel Regulator ..... Standard
Fuel Shut-off Solenoid ..... Standard
Operating Fuel Pressure ..... 5 in. - 14 in. Water Column

Fuel Consumption - ft^3/hr (Natural Gas/LPV)

Exercise Cycle	*25% Load*	*50% Load*	*75% Load*	*100% Load*
60/24	140/56	220/87	300/119	380/151

◆ ELECTRICAL SYSTEM

Battery Charge Alternator ..... 12V, 30 Amp
Static Battery Charger ..... 2 Amp
Recommended Battery ..... Group 26, 525CCA
System Voltage ..... 12 Volts

Voltage Regulator

Type ..... Electronic
Sensing ..... Single-phase
Regulation ..... ± 1%
Features ..... V/F Adjustable, Adjustable Voltage and Gain LED Indicators

Power Adjustment for Ambient Conditions

Temperature Deration
3% for every 10° C above °C 25
1.65% for every 10° above °F 77
Altitude Deration
1% for every 100 m above m 183
3% for every 1000 ft. above ft. 600

Controller R-100

Figure 1 — Interconnections

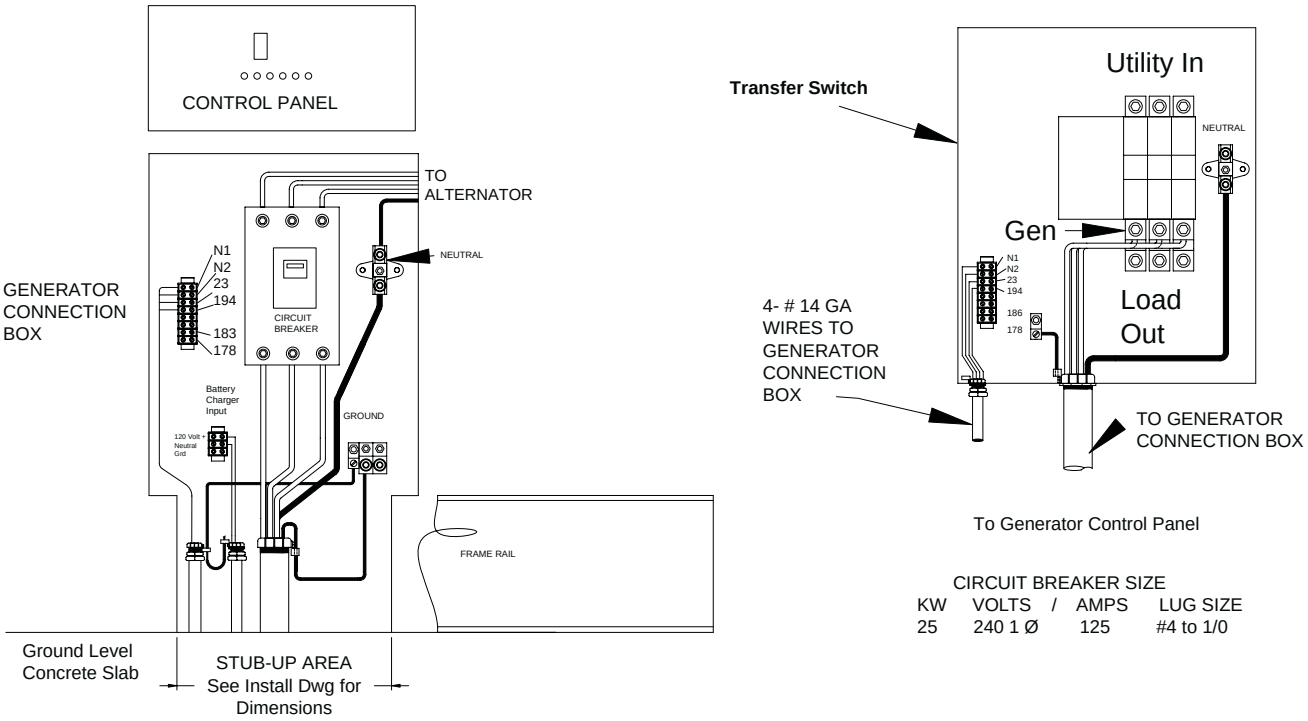

CIRCUIT BREAKER SIZE

KW	VOLTS /	AMPS	LUG SIZE
25	240 1 Ø	125	#4 to 1/0

◆ COLD WEATHER KIT

For cold climates, optional cold weather kit (part number 0F6148) is recommended. The kit includes:

- Battery Warmer
- 4” Junction Box with hardware
- 6 qt. pack 5W-30 synthetic oil (engine)

◆ RECONFIGURING THE FUEL SYSTEM

NOTE:

All models are configured for natural gas or LP vapor from the factory.

To reconfigure the fuel system from NG to LP, follow these steps:

1. Turn the main gas supply off.
2. Remove the carburetor fuel hose from the outlet port (Port 1) of the demand regulator (Figure 6.2).
3. Remove the brass hose fitting from the outlet port (Port 1) of the demand regulator.
4. Remove pipe plug from Port 2.
5. Install brass hose fitting into Port 2.
6. Install pipe plug into Port 1.
7. Connect carburetor gas hose to brass fitting.
8. Tighten all clamps and plugs.
9. Make sure fuel supply is of the proper pressure and type for configuration.
10. Reverse the procedure to convert back to natural gas.
11. The Dip switch inside the control panel must be in the LP or NG position when switching to different fuels.

Figure 6.2 — Reconfigure the Fuel System

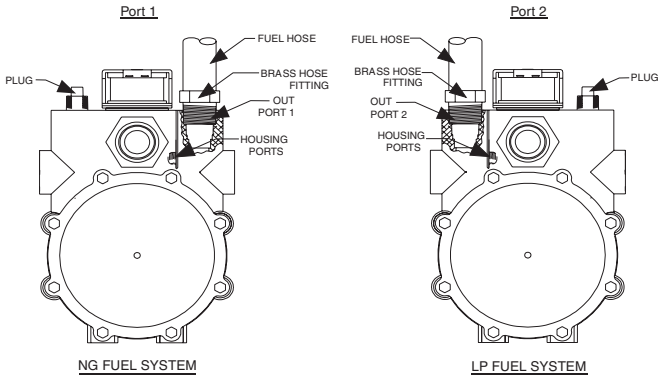

NOTE:

Port 1 is for NG only and Port 2 is for LP vapor only. No provision for dual fuel has been made.

⚠ DANGER ⚠

⚠ **Serious injury or damage may occur if not configured properly. Please consult an Authorized Service Dealer with any questions.**

GENERATOR AC LEAD CONNECTIONS

See "Voltage Codes". This generator may be rated at any one of three voltages, either single-phase or three-phase. The electrical wires in the unit's AC connection (lower) panel should be installed according to the number of leads and the voltage/phase required for the application. If there are any questions regarding lead connection, refer to the wiring diagrams at the back of this manual.

Voltage codes apply to the type of stator assembly installed on a particular generator.

◆ FOUR-LEAD, SINGLE-PHASE STATOR

Four-lead generators (see Figure 7.1) are designed to supply electrical loads with voltage code "A" (240V, 1-phase, 60 Hz). Electrical power is produced in the stator power windings. These windings were connected at the factory to the main circuit breaker as shown in Figure 7.1.

The rated voltage between each circuit breaker terminal is 240V. The rated voltage between each circuit breaker terminal and the neutral point 00 is 120V.

Figure 7.1 — Four-lead, Single-phase Stator

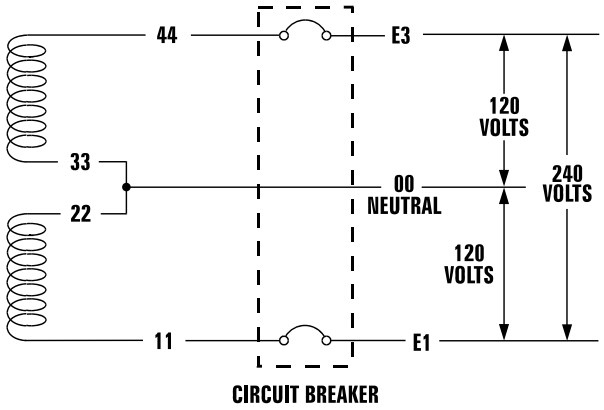

ALTERNATOR POWER WINDING CONNECTIONS

◆ 3-PHASE ALTERNATORS

The generator is designed to supply 3-phase electrical loads. Electric power is produced in the alternator power windings. These windings were connected at the factory to the main circuit breaker with a "Y" configuration as shown in Figures 7.2 and 7.3.

The rated voltage between circuit breaker terminals E1-E2, E1-E3 and E2-E3 is either 480V or 208V depending on the model.

The rated voltage between each circuit breaker terminal and the neutral point 00 is either 277V or 120V depending on the model.

Figure 7.2 — Stator Power Winding Connections - 3-phase, 277/480V (6 Lead)

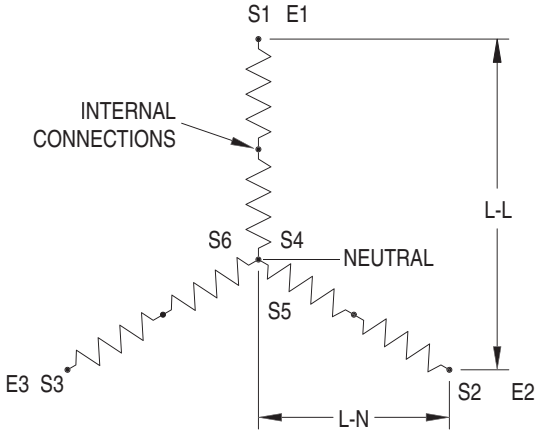

Figure 7.3 — Stator Power Winding Connections - 3-phase, 120/208V (6 Lead)

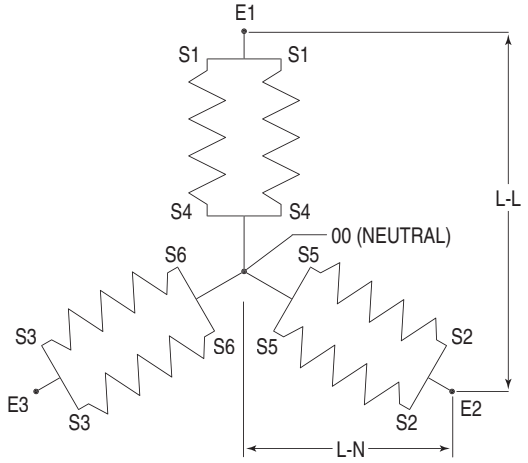

INSTALLATION

Refer to the separate "Installation Guide QT Product Line" supplied with the unit.

PREPARATION BEFORE START-UP

The instructions in this section assume that the standby generator has been properly installed, serviced, tested, adjusted and otherwise prepared for use by a competent, qualified installation contractor. Be sure to read the "Safety Rules", as well as all other safety information in this manual, before attempting to operate this (and related) equipment.

Before starting the generator for the first time, the installer must complete the following procedures. For follow-up maintenance information and/or service intervals, please refer to the "Maintenance" section and the "Service Schedule".

◆ TRANSFER SWITCH

If this generator is used to supply power to any electrical system normally powered by an electric utility, the National Electrical Code requires that a transfer switch be installed. The transfer switch prevents electrical backfeed between two different electrical systems. (For additional information, see the applicable transfer switch manual for this unit.) The transfer switch, as well as the generator and other standby components, must be properly located and mounted in strict compliance with applicable codes, standards and regulations.

◆ FUEL SYSTEM

Make sure the fuel supply system to the generator (a) delivers the correct fuel at the correct pressure and (b) is properly purged and leak tested according to code. No fuel leakage is permitted. See "Specifications" for more information.

◆ GENERATOR SET LUBRICATION

Check the engine crankcase oil level before operating and add oil to the proper level – the dipstick "FULL" mark. Never operate the engine with the oil level below the dipstick "ADD" mark. See "Specifications" and "Engine Oil Recommendations".

NOTE:

This engine is shipped from the manufacturer with "break-in" oil. This oil should be changed after 30 hours of operation.

Check the oil level in the generator gearbox (if so equipped) prior to initial use and at the intervals indicated by the "Service Schedule." The recommended oil is SAE 90 gear lubricant.

Also, if the engine is equipped with a mechanical governor, make sure the governor is properly lubricated with clean engine oil.

◆ PRIOR TO INITIAL START-UP

⚠ CAUTION ⚠

⚠ **Prior to initially starting the generator, it must be properly prepared for use. Any attempt to crank or start the engine before it has been properly serviced with the recommended types and quantities of engine fluids (oil, coolant, fuel, etc.) may result in an engine failure.**

◆ ENGINE COOLANT

Have the engine cooling system properly filled with the recommended coolant mixture. Check the system for leaks and other problems. See "Specifications" and "Coolant" sections.

◆ BELT TENSION

Check-the engine-fan belt tension and condition prior to placing the unit into service and at recommended intervals. Belt tension is correct when a force of approximately 22 pounds (10 kg), applied midway between pulleys, deflects the belt about 3/8- to 5/8-inch (10 to 16 mm).

◆ ELECTRICAL SYSTEM

Make sure the generator is properly connected to an approved earth ground.

Make sure the generator battery is fully charged, properly installed and interconnected, and ready for use.

NOTE:

Battery charger must be connected to 120 VAC, 15 amp circuit to operate.

Check to ensure that there are no loose electrical connections. Restrain any loose wires to keep them clear of any moving generator set components.

INITIAL INSPECTION FOR QT GENSET STARTUP

Inspect for the following.

- Freight Damage.
- Manuals present.
- Fluid Levels (Oil, coolant, battery, Gear Drive).
- Correct fuel piping.
- Correct muffler installation for external application.
- Adequate air flow, clearances and ventilation per installation drawings and applicable codes.
- Correct AC and DC wire size, connections and grounding. Control and communication wiring to/from the transfer switch must be run in a separate conduit from the AC power leads.

- **Battery charger connection to 120 VAC.**
- Communication wires connected between transfer switch and generator (HTS only).
- Unit secured to pad.

START-UP CHECKLIST

WARNING

Before working on the generator, ensure the following:

- **The AUTO/OFF/MANUAL switch is in the OFF position.**
- **The 120VAC supply to the battery charger is switched OFF.**

◆ PREPARATION FOR START-UP

- Ensure that the 120VAC circuit breaker to the battery charger is open.
- Remove the fuse from the the control panel. For the H-100 and R-series: Open the front door of the control box and remove the 15 Amp ATO fuse in the lower left-hand corner of the control box.
- Connect the battery cables to the battery. Attach negative battery cable last.
- Close the 120VAC circuit breaker to the battery charger.
- Measure the voltage at the battery before and after the charger is turned on.
- Verify all AC electrical connections are tight at the circuit breaker and transfer switch.
- Visually inspect entire area looking for loose paper, plastic wrappings, leaves, etc.
- Check all hoses clamps fittings for leaks or damage.
- Check all electrical plugs throughout the generator. Ensure each plug is seated correctly and fully inserted into its receptacle.
- Verify the AUTO/OFF/MANUAL switch is in OFF position.
- Open the valve to the engine fuel line.
- Bleed the fuel system of air. (necessary for long fuel lines).
- Open the generator main line circuit breaker.
- Connect a manometer to the gas line and record the static pressure. It must be as listed in the Specifications.
- Insert the fuse into the control panel.
- Move the AUTO/OFF/MANUAL switch to the MANUAL position. The engine should now crank and start.
- Check voltage at the generator terminals.
- For 3-phase units, check phase rotation at the transfer switch terminals. The generator phase rotation must match the utility phase rotation.
- Check for coolant, fuel, oil, and exhaust leaks.
- Close the generators main line circuit breaker.
- Turn the generator set off.
- Connect the UTILITY supply to the transfer switch.
- Set the AUTO/OFF/MANUAL switch to AUTO.
- Disconnect utility power before the transfer switch.

  Engine should start, transfer to load.

  Run at least 15 minutes on generator power. Make certain all 3-phase loads are functioning correctly (correct phase rotation).
- Reconnect Utility power

  Transfer switch will transfer back to Utility and engine will shut down within the given time parameters set up for the specific transfer switch and controller.
- Install all covers, access plates and door panels.
- Put the Owners Manual in a safe and accessible place.
- Make certain the AUTO/OFF/MANUAL switch is in the AUTO position.

◆ START-UP INSPECTION

When a start-up is performed by an Authorized Service Dealer, a standard three-part form titled “Start-up Inspection for Standby Power Systems” (part no. 067377), should be completed by the installation technician or engineer. See page 1-3 for information on locating the nearest Authorized Service Dealer. The installer should complete the form and disseminate copies as follows:

- White copy: Mail to Generac Warranty Department, P.O. Box 340, 211 Murphy Dr., Eagle, WI 53119-2062.
- Pink Copy: For service file of installing dealer.
- Yellow Copy: For the customer’s records.

GENERATOR CONTROL AND OPERATION

Refer to the appropriate control panel operator's manual for this unit.

OPERATING UNIT WITH MANUAL TRANSFER SWITCH

If the generator was installed in conjunction with a transfer switch capable of manual operation only, the following procedure applies. A manually operated transfer switch is one that will not provide automatic start-up and does not include an intelligence circuit.

◆ ENGINE START-UP AND TRANSFER

For additional information, refer to the applicable control panel manual for this unit, as well as any literature pertaining to the specific transfer switch.

DANGER

The Maintenance Disconnect Switch and the AUTO/OFF/MANUAL switches (if so equipped) must be set properly, or the generator will crank and start as soon as the utility power to the transfer switch is turned off. Refer to applicable control panel and transfer switch manuals for more information.

Do not proceed until certain that utility source voltage is available to the transfer switch and the transfer switch main contacts are set to UTILITY.

Do not attempt manual operation until all power supplies to the transfer switch have been positively turned off, or extremely dangerous - possibly lethal - electrical shock will result.

Transfer switch enclosure doors should be kept closed and locked. Only authorized personnel should be allowed access to the transfer switch interior. Extremely high and dangerous voltages are present in the transfer switch.

In order to transfer load from the utility source to the generator, follow these directions:

- Turn OFF or disconnect the utility power circuit to the transfer switch, using the means provided (such as the utility source main line circuit breaker).
- Set the transfer handle to its UTILITY (NORMAL) position with load circuits connected to the utility power supply.
- Set the standby generator's main line circuit breaker to its OFF (or OPEN) position.
- Start the generator.

CAUTION

Do not crank the engine continuously for longer than 30 seconds, or the heat may damage the starter motor.

- Let engine stabilize and warm up.
- Check all applicable instrument and gauge readings. When certain that all readings are correct, move the transfer switch manual handle to its STANDBY (GENERATOR) position, i.e., load circuits supplied by the generator.
- Set the standby generator's main line circuit breaker to its ON (or CLOSED) position.
- Load circuits are now powered by the standby generator.

◆ RETRANSFER AND SHUTDOWN

For additional information, refer to the applicable control panel manual for this unit, as well as any literature pertaining to the specific transfer switch.

To transfer the load back to the utility power source and shut down the generator, follow these directions:

- Set the standby generator's main line circuit breaker to its OFF (or OPEN) position.
- Manually move the transfer switch handle to its UTILITY (NORMAL) position, i.e., load circuits connected to the utility.
- Turn ON the utility power supply to the transfer switch, using the means provided (such as the utility power source main line circuit breaker).
- Let the generator run at no-load for a few minutes to stabilize internal temperatures.
- Shut down the generator.

OPERATING UNIT WITH AUTOMATIC TRANSFER SWITCH

If the generator has been installed with an automatic transfer switch, such as an RTS, HTS, or GTS-type transfer switch, the engine may be started and stopped automatically or manually.

NOTE:

Refer to the applicable manual for your transfer switch and to "Transfer Switch Start Signal Connections". In addition, please note the dangers under "Engine Start-up and Transfer."

MAINTENANCE PERFORMED BY AUTHORIZED SERVICE FACILITIES

WARNING

Before working on the generator, ensure the following:

- **The AUTO/OFF/MANUAL switch is in the OFF position.**
- **The 15A fuse has been removed from the control box.**
- **The 120VAC supply to the battery charger is switched OFF.**

◆ EVERY THREE MONTHS

1. Check battery condition.
2. Inspect and test fuel system.
3. Check transfer switch.
4. Inspect exhaust system.
5. Check engine ignition system.
6. Check fan belts.

◆ ONCE EVERY SIX MONTHS

1. Test Engine Safety Devices (low oil pressure, low coolant level, high coolant temperature).

◆ ONCE ANNUALLY

1. Test engine governor; adjust or repair, if needed.
2. Clean, inspect generator.
3. Flush cooling system.

◆ FIRST 30 OPERATING HOURS

1. Change engine "break-in" oil and filter.

◆ FIRST 100 OPERATING HOURS

1. Change engine oil and oil filter. After initial change, service engine oil and filter at 150 operating hours or six months, whichever comes first.
2. Retorque cylinder head.
3. Retorque intake and exhaust manifold.

◆ EVERY 500 OPERATING HOURS

1. Service air cleaner.
2. Check starter.
3. Check engine DC alternator.

◆ EVERY 800 OPERATING HOURS

1. Retorque cylinder head.
2. Retorque intake and exhaust manifold.
3. Check engine compression.
4. Check valve clearance.

COOLING SYSTEM

Air intake and outlet openings in the generator compartment must be open and unobstructed for continued proper operation. This includes such obstructions as high grass, weeds, brush, leaves and snow.

Without sufficient cooling and ventilating air flow, the engine/generator quickly overheats, which causes it to shut down. (See the installation diagram.)

WARNING

The exhaust system parts from this product get extremely hot and remains hot after shutdown. High grass, weeds, brush, leaves, etc. must remain clear of the exhaust. Such materials may ignite and burn from the heat of the exhaust system.

OVERLOAD PROTECTION FOR ENGINE DC ELECTRICAL SYSTEM

Engine cranking, start up and running are controlled by a solid state Engine Controller circuit board. Battery voltage is delivered to that circuit board via a 15 amp fuse. These overcurrent protection devices will open if the circuit is overloaded.

CAUTION

If a circuit breaker opens or a fuse element melts, find the cause of the overload before resetting the circuit breaker or replacing the fuse.

CHECKING FLUID LEVELS

◆ CHECK ENGINE OIL

Check engine crankcase oil level (Figure 10.1) at least every 20 hours of operation, or prior to use.

- Remove oil dipstick and wipe dry with a clean, lint-free cloth.
- Install oil dipstick, then remove again.
- Oil should be between FULL and ADD marks.
- If oil level is below the dipstick ADD mark, remove oil fill cap. Add the recommended oil to bring oil level up to the FULL mark. DO NOT FILL ABOVE THE “FULL” MARK. See “Engine Oil Recommendations” for recommended oils.

Figure 10.1 - Oil Dipstick and Oil Fill Cap

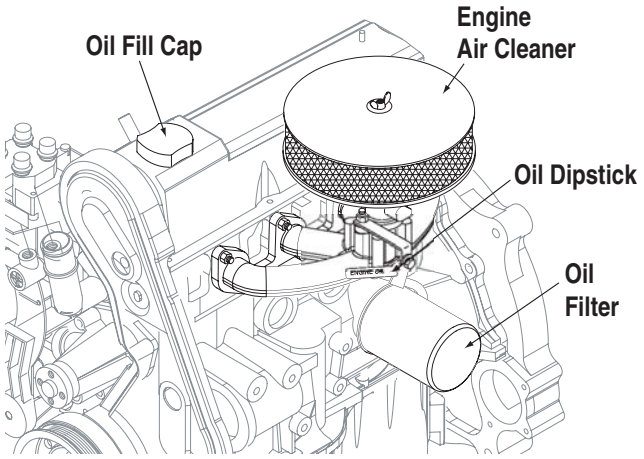

◆ BATTERY FLUID

Check battery electrolyte fluid based on the Maintenance Schedule. Fluid should cover separators in all battery cells. If fluid level is low, add distilled water to cover tops of separators. DO NOT USE TAP WATER IN BATTERY.

◆ ENGINE COOLANT

Check coolant level in coolant recovery bottle. See Specifications.

- Add recommended coolant mixture as necessary.
- Periodically remove radiator pressure cap (only when engine has cooled down) to make sure the coolant recovery system is functioning properly. Coolant should be at bottom of radiator filler neck. If coolant level is low, inspect gasket in radiator pressure cap. Replace cap, if necessary. To have pressure cap tested, contact an Authorized Service Dealer. Inspect cooling system and coolant recovery system for leaks.

MAINTENANCE OWNER/ OPERATOR CAN PERFORM

◆ CHECK ENGINE OIL LEVEL

Refer to “Checking Fluid Levels”.

◆ CHECK BATTERY

- See “Checking Fluid Levels”.
- Check battery cables for condition, tightness, corrosion or damage. Clean, tighten or replace as necessary.

◆ EXERCISE SYSTEM

Start the generator engine at least once every seven days and let it run at least 20 minutes. See “Weekly Exercise Cycle”.

◆ INSPECT COOLING SYSTEM

- Inspect engine cooling system. See “Maintenance Schedule”.
- Check hoses for damage, deterioration, leaks, etc. Correct any discrepancies found.
- Check hose clamps for tightness.

◆ CHECK ENGINE COOLANT LEVEL

See “Checking Fluid Levels”.

◆ PERFORM VISUAL INSPECTION

Complete a thorough visual inspection of the entire engine-generator monthly. Look for obvious damage, loose, missing or corroded nuts, bolts and other fasteners. Look for fuel, oil or coolant leaks.

◆ INSPECT EXHAUST SYSTEM

Inspect the exhaust system at least once every three months. Check all exhaust system pipes, mufflers, clamps, etc. for condition, tightness, leaks, security, damage.

◆ CHECK FAN BELT

- Inspect fan belts every three months. Replace any damaged, deteriorated, worn or otherwise defective belt.
- Check fan belt tension. Thumb pressure, exerted midway between pulleys, should deflect about 3/8 to 5/8 of an inch. Adjust belt tension as required.

◆ INSPECT ENGINE GOVERNOR

Visually inspect electronic governor.

⚠ DANGER ⚠

⚠ Do not attempt to adjust the governor. Only qualified service facilities should adjust the governor. Excessively high operating speeds are dangerous and increase the risk of personal injury. Low speeds impose a heavy load on the engine when adequate engine power is not available and may shorten engine life. Correct rated frequency and voltage are supplied only at the proper governed speed. Some connected electrical load devices may be damaged by incorrect frequency and/or voltage. Only qualified service technicians should adjust the governed speed.

◆ CHANGING ENGINE OIL

Refer to maintenance performed by authorized service facilities for engine oil and filter change frequencies.

Drain the oil while the engine is still warm from running. This means warm up the engine, shut it down and drain immediately as follows:

1. Remove OIL DRAIN HOSE from its retaining clip.
2. Loosen and remove OIL DRAIN HOSE CAP. Drain oil completely into suitable container.
3. When all oil has drained, install and tighten OIL DRAIN HOSE CAP, and re-install into its retaining clip.
4. Turn OIL FILTER (Figure 10.1) counterclockwise and remove. Properly dispose of old filter.
5. Apply light coating of new engine oil to seal of new oil filter.-Install FILTER and tighten by hand only. DO NOT OVER TIGHTEN.
6. Remove OIL FILL CAP. Add recommended oil (see SPECIFICATIONS). DO NOT FILL ABOVE THE DIPSTICK "FULL" MARK. Crankcase oil capacity is 4.0 U.S. quarts (3.8 liters).

CAUTION

⚠ **After refilling the crankcase with oil, always check oil level on dipstick. NEVER OPERATE ENGINE WITH OIL BELOW THE DIPSTICK "ADD" MARK.**

7. Start engine and check for oil leaks.

◆ CHANGING THE ENGINE AIR CLEANER

To replace the engine air cleaner, simply remove the air cleaner cover and replace the air filter making sure it is positioned properly before reattaching the cover (Figure 10.1).

See the "Service Schedule," for air cleaner maintenance.

◆ SPARK PLUGS

Reset the spark plug gap or replace the spark plugs as necessary (Figure 10.2).

1. Clean the area around the base of the spark plugs to keep dirt and debris out of the engine. Clean by scraping or washing using a wire brush and commercial solvent. Do not blast the spark plugs to clean.
2. Remove the spark plugs and check the condition. Replace the spark plugs if worn or if reuse is questionable. See the "Service Schedule" for recommended inspection.
3. Check the spark plug gap using a wire feeler gauge. Adjust the gap to 1.07-1.17 mm (0.042-0.046 inch) by carefully bending the ground electrode (Figure 10.2).

Figure 10.2 – Setting the Spark Plug Gap

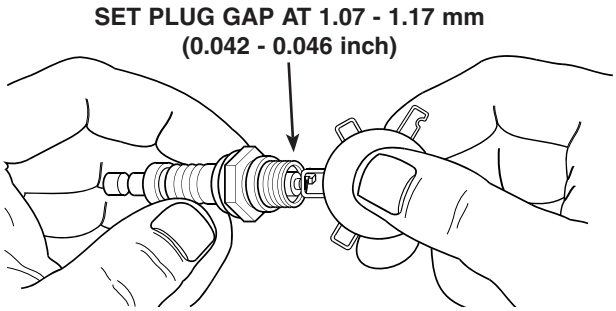

◆ COOLANT CHANGE

Every year, have an Authorized Service Facility drain, flush and refill the cooling system. See "Specifications" for cooling system recommendations.

MISCELLANEOUS MAINTENANCE

◆ CLEANING THE GENERATOR

Keep the generator as clean and as dry as possible. Dirt and moisture that accumulates on internal generator windings have an adverse effect on insulation resistance.

Periodically clean generator exterior surfaces. A soft brush may be used to loosen caked on dirt. Use a vacuum system or dry, low pressure air to remove any accumulations of dirt. The generator is housed inside an all-weather enclosure, clean the enclosure with a soft, damp cloth or sponge and water.

Once each year have the generator cleaned and inspected by an Authorized Service Dealer. That dealer will use dry, low pressure air to clean internal windings. Parts inside the control console should be cleaned and inspected at this time as well.

Finally, have the insulation resistance of stator and rotor windings checked. If insulation resistances are excessively low, the generator may require drying.

◆ BATTERY

All lead-acid storage batteries discharge when not in use. Refer to specific instructions and warnings that accompany the battery. If such information is not available, observe the following precautions when handling a battery:

- DO NOT use jumper cables and a booster battery to crank or start the generator engine.
- DO NOT recharge a weak battery while it is installed in the generator. Remove battery from generator and recharge in a well-ventilated area, away from fuel vapors, sparks, heat or flames.
- Battery electrolyte fluid is an extremely caustic sulfuric solution that can cause severe burns. DO NOT permit fluid to contact eyes, skin, clothing, painted surfaces, wiring insulation, etc. If any battery fluid is spilled, flush the affected area with clear water immediately.
- Always wear safety glasses, rubber apron and gloves when handling a battery.
- Batteries give off explosive hydrogen gas while charging. The gas can form an explosive mixture around the battery for several hours after charging. Any spark, heat or flames can ignite the gas and cause an explosion which can shatter the battery, causing blindness or other serious injury.

◆ BATTERY MAINTENANCE

The battery should be inspected per Scheduled Maintenance. The following procedure should be followed for inspection:

1. Inspect the battery posts and cables for tightness and corrosion. Tighten and clean as necessary.
2. Check the battery fluid level of unsealed batteries and, if necessary, fill with DISTILLED WATER ONLY. DO NOT USE TAP WATER IN BATTERIES.
3. Have the state of charge and condition checked. This should be done with an automotive-type battery hydrometer.

DANGER

Storage batteries give off explosive hydrogen gas. This gas can form an explosive mixture around the battery for several hours after charging. The slightest spark can ignite the gas and cause an explosion. Such an explosion can shatter the battery and cause blindness or other injury. Any area that houses a storage battery must be properly ventilated. Do not allow smoking, open flame, sparks or any spark producing tools or equipment near the battery.

Battery electrolyte fluid is an extremely corrosive sulfuric acid solution that can cause severe burns. Do not permit fluid to contact eyes, skin, clothing, painted surfaces, etc. Wear protective goggles, protective clothing and gloves when handling a battery. If fluid is spilled, flush the affected area immediately with clear water.

Do not use any jumper cables or booster battery to crank and start the generator engine. If the battery has completely discharged, remove it from the generator for recharging.

WARNING

Be sure the AUTO/OFF/MANUAL switch is set to the OFF position, before connecting the battery cables. If the switch is set to AUTO or MANUAL, the generator can crank and start as soon as the battery cables are connected.

Be sure the 120VAC power supply to the battery is turned OFF, or sparking may occur at the battery posts as the cables are attached and cause an explosion.

◆ BATTERY REPLACEMENT

When replacing batteries, use the same number and the type of battery that was supplied with the unit, and is listed in the parts list in the back of this manual.

NOTE:

The BCI number should be located directly on the battery.

REPAIR PARTS

The latter portion of this manual consists of exploded views, parts lists and electrical data pertaining to this generator set. The parts lists consist of (a) an item number, (b) a part number, (c) the quantity required, and (d) a description of the part. The item number corresponds to an identical number on the exploded view drawing.

SERVICE SCHEDULE

The following is a recommended maintenance schedule for small standby and residential generator sets. The established intervals in the schedule are the *maximum* recommended when the unit is used in an average service application. They will need to be decreased (performed more frequently) if the unit is used in a severe application. Use calendar time or accumulated run time, from the previous maintenance interval to determine the next required maintenance interval.

Service Maintenance Interval Information:

The various service maintenance intervals are designated by interval numbers as follows:

1 An early inspection of the generator set to insure it is ready to operate when required and to identify any potential problem areas.

*Performed monthly this requires approximately .**5 man-hours** per unit to complete.*

This inspection may be performed by the end user providing the following safety steps are taken to prevent the engine from starting automatically without warning:

To prevent injury, perform the following steps in the order indicated before starting any maintenance:

- **Disable the generator set from starting and/or connecting to the load by setting the control panel AUTO/OFF/MANUAL switch to the OFF position.**
- **Remove the 5 amp and 15 amp control panel fuses.**
- **Turn off the battery charger (turn OFF utility supply to ATS).**
- **Remove the negative battery cable.**

The battery charger must be turned off BEFORE removing the battery cable to prevent an over current condition from burning out sensitive control panel components and circuits.

Following all maintenance, reverse these steps to insure the unit is returned to standby setup for normal operation when required.

2 A break-in service inspection of the generator set to insure it is ready to operate and carry the load when required, and to identify any potential problem areas.

*Performed **ONLY ONCE** following the first three months, or 30 run time hours of operation after purchase of the unit and requires approximately **2.5 man-hours** per unit to complete.*

This inspection contains some maintenance tasks which require special tools, equipment, and/or knowledge to accomplish and should be performed only by a Service Dealer.

3 An operational inspection of the generator set to insure it is ready to operate and carry the load when required, and to identify any potential problem areas.

*Performed semi-annually this requires approximately **1.5 man-hours** per unit to complete.*

This inspection contains some maintenance tasks which require special tools, equipment, and/or knowledge to accomplish and should be performed only by a Service Dealer.

4 A mid-level inspection of the generator set to insure it is ready to operate and carry the load when required, and to identify any potential problem areas.

*Performed annually this requires approximately **4.0 man-hours** per unit to complete.*

This inspection contains some maintenance tasks which require special tools, equipment, and/or knowledge to accomplish and should be performed only by a Service Dealer.

Standby Generator Sets
Service Schedule

MAINTENANCE

Maintenance Tasks	Level 1 Recom-mended to be done monthly 10 Hrs.	Task Comp. (Date-Initials)	Level 2 Required to be done 3 months/ Break-in 30 Hrs.	Task Comp. (Date-Initials)	Level 3 Required to be done Semi-annually 50 Hrs.	Task Comp. (Date-Initials)	Level 4 Required to be done Annually 100 Hrs.	Task Comp. (Date-Initials)
1. Disable the unit from operating per the first page warning.	●		●		●		●	
2. Check the engine oil level. Adjust as necessary.	●		●		●		●	
3. Check the engine coolant level. Adjust as necessary.	●		●		●		●	
4. Check the engine coolant thermal protection level. Correct as necessary.							●	
5. Check the natural gas delivery system on gas engine driven units. Tighten connections as necessary.			●		●		●	
6. Check the air inlets and outlets for debris. Clean as necessary.	●		●		●		●	
7. Check the battery electrolyte level if accessible. Adjust as necessary.	●		●		●		●	
8. Check the battery posts, cables, and charger for loose connections, corrosion, and proper operation. Correct as necessary.	●		●		●		●	
9. Check the unit wiring for loose connections, corrosion, and damage. Correct as necessary.							●	
10. Check the engine accessory drive belts for wear, weather cracking, and damage. Replace as necessary.							●	
11. Visually inspect the unit looking for leaks, wear or damage, loose connections or components, and corrosion. Correct as necessary.	●		●		●		●	
12. Test the engine and transfer switch safety devices. Correct and/or adjust as necessary.							●	

Maintenance Tasks	Level 1 Recom-mended to be done monthly 10 Hrs.	Task Comp. (Date-In itials)	Level 2 Required to be done 3 months/ Break-in 30 Hrs.	Task Comp. (Date-Initials)	Level 3 Required to be done Semi-annually 50 Hrs.	Task Comp. (Date-Initials)	Level 4 Required to be done Annually 100 Hrs.	Task Comp. (Date-Initials)
13. Initiate an automatic start and transfer of the unit to site load and exercise it for at least 1 hour looking for leaks, loose connections or components, and abnormal operating conditions. Correct as necessary.			●		●			
14. Start and exercise the unit at full rated load (use a load bank if the site load is not enough) for at least 2 hours looking for leaks, loose connections or components, and abnormal operating conditions. Correct as necessary.							●	
15. Change the engine oil.			●				●	
16. Replace the engine oil filter(s).			●				●	
17. Replace the engine air filter(s).							●	
18. Replace the engine fuel filter(s) on diesel engine driven units and re-prime the fuel system.			●				●	
19. Check the engine spark plugs on gas engine driven units. Clean and re-gap or replace as necessary.			●				●	
20. Perform a 5 minute no-load operational run of the unit looking for any post service problems.			●				●	
21. Return the unit to standby setup for operation when required.	●		●		●		●	

TROUBLESHOOTING GUIDE

PROBLEM	CAUSE	CORRECTION
Engine won't crank.	1. 15 amp fuse blown. 2. Loose or corroded or defective battery cables. 3. Defective starter contactor. 4. Defective starter motor. 5. Dead or Defective Battery. 6. 5 amp fuse blown.	1. Replace fuse. 2. Tighten, clean or replace battery cables as necessary. 3. Replace contactor.* 4. Replace starter motor.* 5. Remove, change or replace battery. 6. Replace fuse.*
Engine cranks but won't start	1. Out of fuel. 2. Fuel solenoid (FS) is defective 3. Open Wire #14A from Engine Control circuit board. 4. Spark plugs defective. 5. Door on tank not closed.	1. Replenish fuel. 2. Replace solenoid.* 3. Reconnect wire. 4. Clean, regap or replace plugs. 5. Close door on tank.
Engine starts hard, runs rough.	1. Flame arrestor (air cleaner) plugged or damaged. 2. Plugged fuel line. 3. Defective spark plugs. 4. Fuel pressure incorrect.	1. Clean or replace as needed. 2. Unclog fuel line. 3. Clean, regap or replace plugs. 4. Confirm fuel pressure to regulator is as recommended in SPECIFICATIONS.
Engine starts then shuts down.	1. Engine oil level is low. 2. Engine is overheated. 3. Defective Low Oil Pressure Switch 4. Defective Coolant Temperature Switch 5. Defective Control Module circuit board. 6. Coolant Level is Low. 7. Defective Low Coolant Level Switch	1. Check oil and add oil as needed. 2. Check cooling system for leaks. 3. Replace switch.* 4. Replace switch.* 5. Replace board.* 6. Repair leak - Add coolant. 7. Replace Switch.*
AUTO/OFF/MANUAL Switch at OFF, engine continues to run	1. Defective AUTO/OFF/MANUAL switch 2. Open/disconnected wire #15A between AUTO/OFF/MANUAL switch and Control Module circuit board. 3. Defective Control Module circuit board	1. Replace switch.* 2. Reconnect/close wire. 3. Replace board.*
No AC output from generator.	1. Check main line circuit breaker. 2. Check circuit breaker & fuses. 3. Transfer switch set to NORMAL position 4. Generator internal failure. 5. Thermal circuit breaker open.	1. Reset to ON or CLOSED. 2. Reset and replace, if necessary. 3. Set to GENERATOR position. 4. * 5. Auto-reset - Wait 5 min. and attempt restart.

***Contact the nearest Authorized Dealer for assistance.**

GROUP A

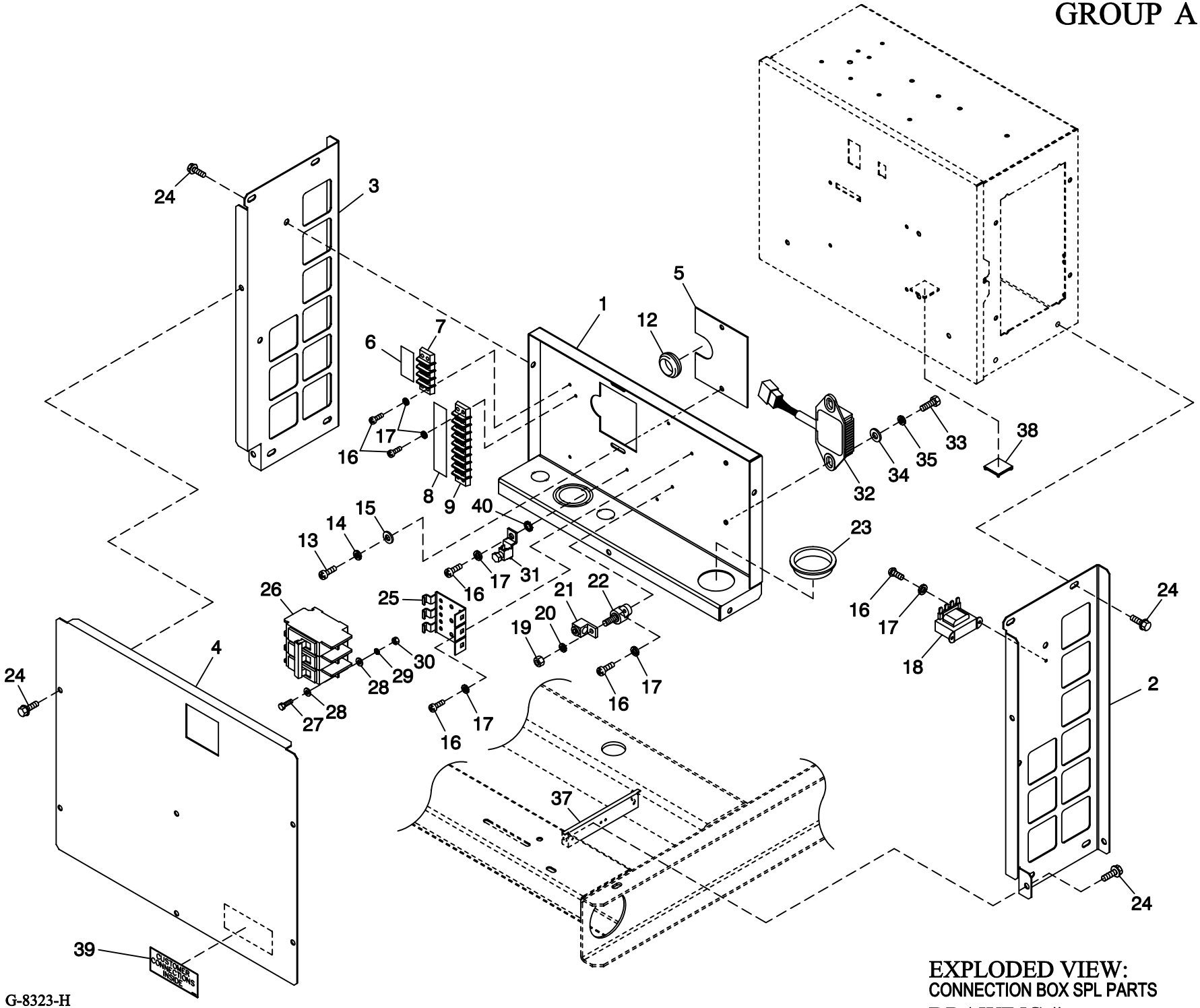

EXPLODED VIEW:
CONNECTION BOX SPL PARTS
DRAWING #: 0F7352

REVISION: G-8323-H
DATE: 6/8/06

EXPLODED VIEW: CONNECTION BOX SPL PARTS
DRAWING #: 0F7352

GROUP A

APPLICABLE TO:

ITEM	PART #	QTY.	DESCRIPTION
1	0F7135	1	BREAKER TRAY BACK/BOTTOM
2	0F7022	1	SUPPORT CONTROL PANEL SIDE RH
3	0F7021	1	SUPPORT CONTROL PANEL SIDE LH
4	0F7260	1	COVER CIRCUIT BREAKER 2P
	0F7136	1	COVER CIRCUIT BREAKER 3P
5	0F6156	1	PLATE WIRE SNGL GALV
6	0F4464	1	DECAL CUST CONN 120V UTILITY
7	0D4698	REF	BLOCK TERM 20A 6 X 3 X 1100V
8	0F3824	1	DECAL UTIL SENSE/CUST CONN
9	057701	REF	BLOCK TERM 20A 8 X 6 X 1100V
10	0F6146	1	HANG TAG 2 WIRE START (NOT SHOWN)
12	081008	1	GROMMET 1.25 X .25 X .75
13	0C2267	2	SCREW HHTT M5-0.8 X 12 BP
14	049226	2	WASHER LOCK M5
15	051713	2	WASHER FLAT M5
16	0C2212	11	SCREW PHTT M4-0.7 X 16 ZYC
17	022264	11	WASHER LOCK #8-M4
18	0F6366A	1	XFMR DUAL 104V/16V (3 PHASE)
	0F6366B	1	XFMR DUAL 120V/16V (1 PHASE)
19	022241	1	NUT HEX 3/8-16 STEEL
20	022237	1	WASHER LOCK 3/8
21	057329	1	LUG SLDLSS 350-#6 X 13/32 AL/CU
22	057073	1	JUNCTION BLOCK 3/8-16
23	023484J	1	BUSHING SNAP SB-2000-26
24	0E3257	15	SCREW HWHTF M6-1.0 X 16
25	0E7890	REF	BRKT CB MTG BACK 2P
	0E6002	REF	MTG TRACK BQ SIEMENS CB 3P
26	0D5544	REF	CB 0100A 2P 240V S BQ2 LL (1.5L 2 POLE)
	062812	REF	CB 0080A 3P 240V S BQ3 LL (1.5L 3 POLE)
	0A2077	REF	CB 0125A 2P 240V S BQ2 LL (2.5L 2 POLE)
	040532	REF	CB 0100A 3P 240V S BQ3 LL (2.5L 3 POLE)
27	052619	REF	SCREW HHC M5-0.8 X 20 G8.8 (NOT SHOWN)
28	023897	REF	WASHER FLAT #10 ZINC (NOT SHOWN)
29	049226	REF	WASHER LOCK M5 (NOT SHOWN)
30	051716	REF	NUT HEX M5-0.8 G8 CLEAR ZINC (NOT SHOWN)
31	025433	1	LUG SLDLSS #6-14 X 13/64 CU
32 *	0A1354A	REF	REGULATOR - DC ALT
33 *	0E3257	REF	SCREW HWHTF M6-1.0 X 16
34 *	022473	REF	WASHER FLAT 1/4-M6 ZINC
35 *	022097	REF	WASHER LOCK M6-1/4
37 *	0F7194	2	BRACKET PANEL SUPPORT 1.5L C1
38	057593	1	CABLE TIE MOUNT BLACK
39	0F1733	1	DECAL CUSTOMER CONNECT INSIDE
40	023762	1	WASHER SHAKEPROOF EXT #10 STL

* USED ON 1.5L ONLY.

GROUP A

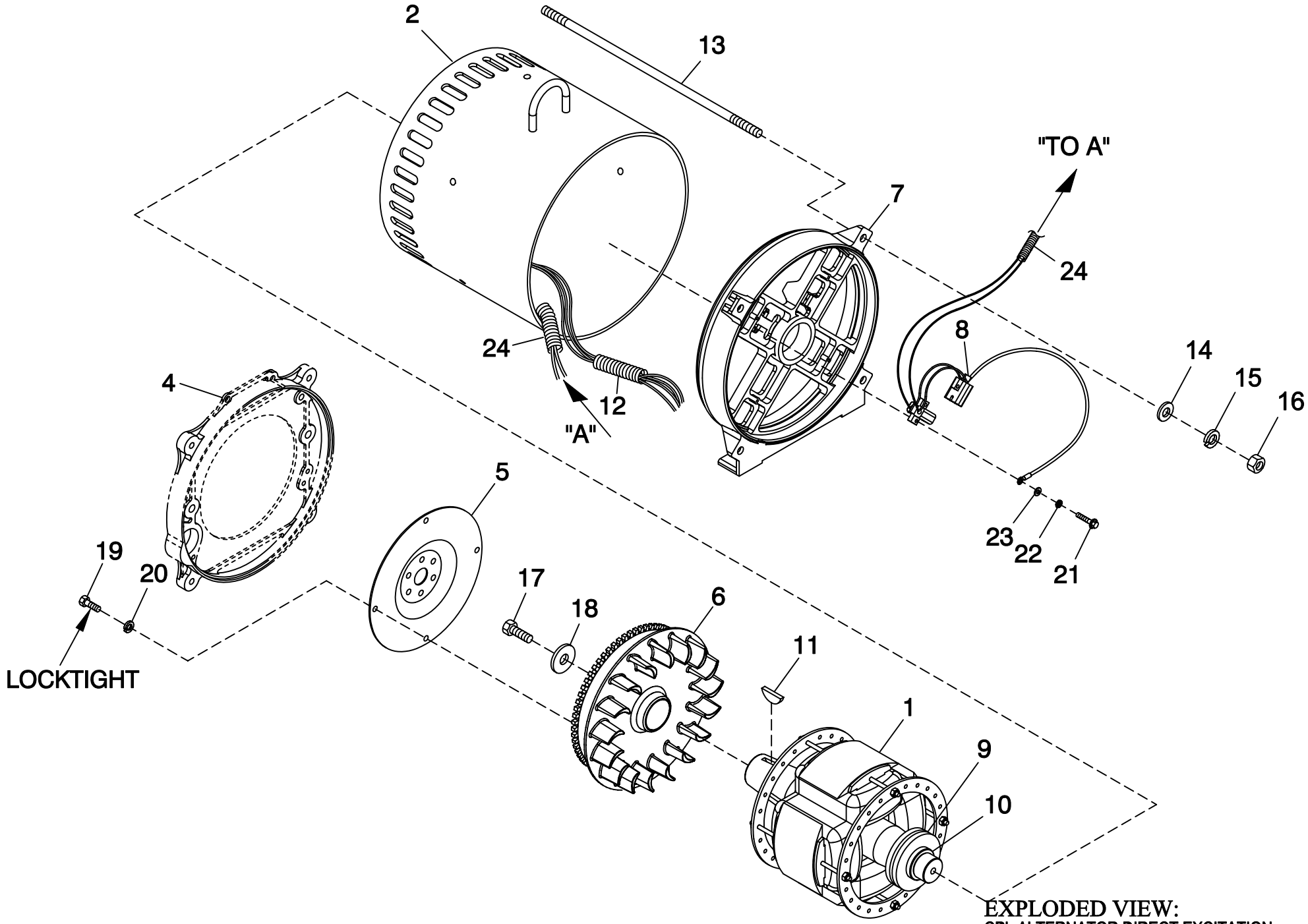

EXPLODED VIEW:
CPL ALTERNATOR DIRECT EXCITATION
DRAWING #: 0F7491

REVISION: G-6376-C
DATE: 9/6/05

EXPLODED VIEW: CPL ALTERNATOR DIRECT EXCITATION
DRAWING #: 0F7491

GROUP A

APPLICABLE TO:

ITEM	PART #	QTY.	DESCRIPTION
1	0F7489	1	ROTOR 30KW DIRECT 390 4P 1800
	0F7490	1	ROTOR 25KW 3PH DIRECT 390 1800
2	0F7458A	1	STR 390 30AD1 HSB TECUM
	0F7459	1	ASSY STR 390 25 GD1 CPL
3	0C9708	REF	INSTR HYPOT TEST (NOT SHOWN)
4	SEE ENGINE EV	REF	ENGINE ADAPTER
5	SEE ENGINE EV	REF	FLEXPLATE
6	0F7364B	1	ASSY FLYWHEEL CPL W/25MM FAN B
7	0E5706	1	REAR BEARING CARRIER 390/DRCT
8	0F7874	1	ASSY BRUSH HOLDER 390/HSB
9 *	070892	1	SLIP RING MACHINED
10 *	047248	1	BALL BEARING-45 MM
11	023454	1	KEY WOODRUFF #E
12	077043E	1	CONDUIT FLEX 1.0"ID (20” LG)
13	04576100BK	4	STUD M14-2.0 X 490 G5 ZINC
14	052646	4	WASHER FLAT M14
15	043123	4	WASHER LOCK M14
16	051779	4	NUT HEX M14-2.0 G8 YEL CHR
17	0A2601	1	SCREW HHC M16-2.0 X 45 G8.8
18	0A2602	1	WASHER FLAT .688ID X 3.25OD
19	0F8408	4	SCREW HHC M10-1.50 X 16 G10.9
20	046526	4	WASHER LOCK M10
21	0C3993	4	SCREW HHTT M4-0.7 X 25 BP
22	022264	4	WASHER LOCK #8-M4
23	038150	4	WASHER FLAT #8 ZINC
24	077043B	1	CONDUIT FLEX .50"ID (16” LG)

* ROTOR REPLACEMENT PARTS

GROUP C

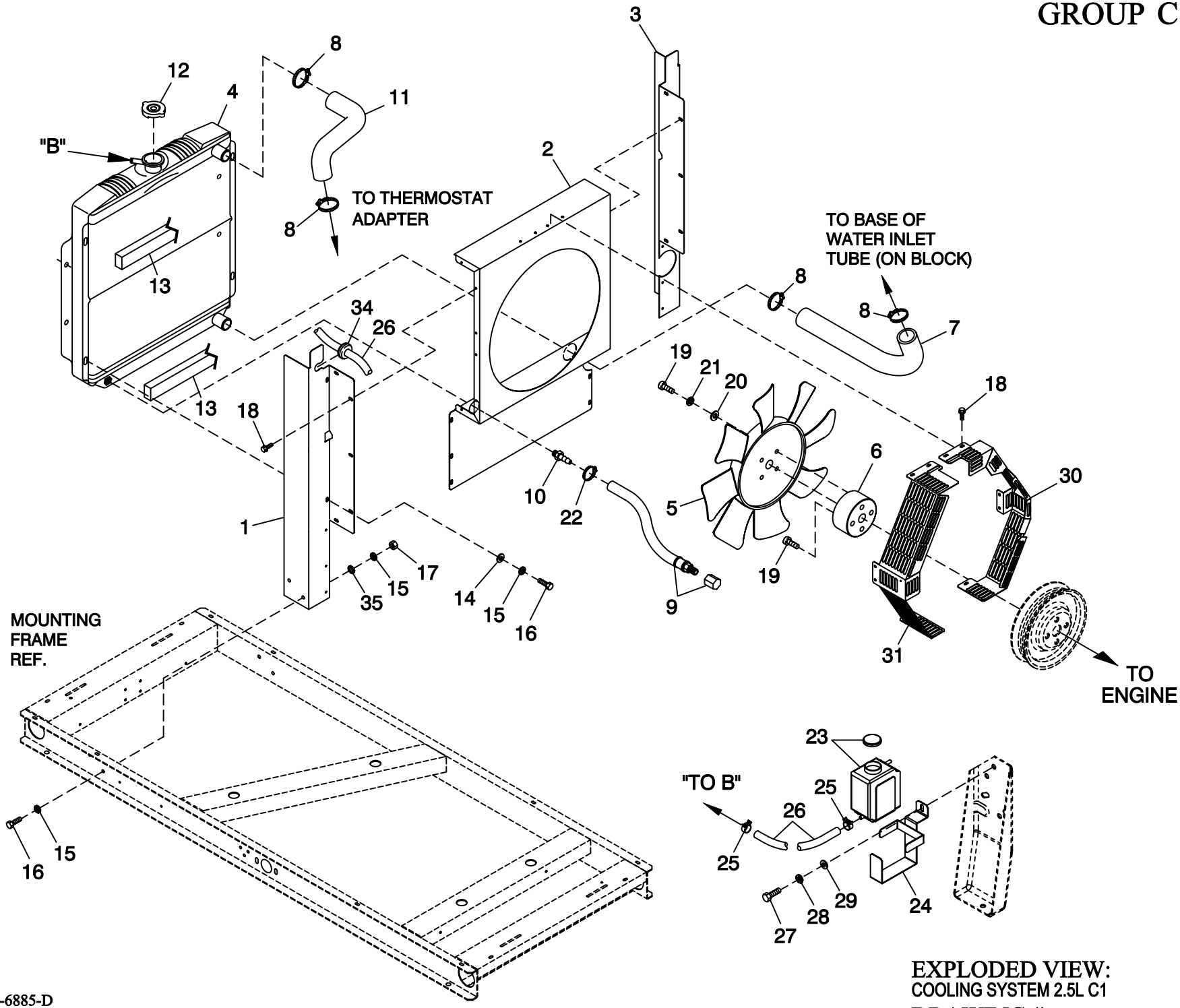

EXPLODED VIEW:
COOLING SYSTEM 2.5L C1
DRAWING #: 0F7363

REVISION: G-6885-D
DATE: 12/9/05

EXPLODED VIEW: COOLING SYSTEM 2.5L C1
DRAWING #: 0F7363

GROUP C

APPLICABLE TO:

ITEM	PART #	QTY.	DESCRIPTION
1	0F7074	1	SUPPORT RADIATOR LH SIDE
2	0F7076	1	VENTURI 16" DIA. FAN
3	0F7075	1	SUPPORT RADIATOR RH SIDE
4	0E9837A	1	RADIATOR 2.5L CPL
5	0F0230A	1	FAN COOL 16" DIA 8 BLADE
6	0F7130	1	SPACER FAN 2.5L C1
7	0E9833	1	HOSE 2.5L FORD LOWER RADIATOR
8	099502	4	CLAMP HOSE #24 B1.06-2.00
9	069860C	1	HOSE OIL DRAIN ASSY 21"
10	035461	1	BARBED STR 1/4 NPT X 3/8
11	0F0127	1	HOSE UPPER RADIATOR 174MM TAL
12	046627	1	CAP RADIATOR
13	052250	2	TAPE FOAM 1 X 1 (20” LG)
14	022473	4	WASHER FLAT 1/4-M6 ZINC
15	022097	8	WASHER LOCK M6-1/4
16	0C8566	8	SCREW HHFC M6-1.0 X 20 G8.8
17	049813	4	NUT HEX M6 X 1.0 G8 YEL CHR
18	0C2454	24	SCREW THF M6-1 X 16 N WA Z/JS
19	040976	8	SCREW SHC M8-1.25 X 20 G12.9
20	022145	4	WASHER FLAT 5/16-M8 ZINC
21	022129	4	WASHER LOCK M8-5/16
22	0C7649	1	CLAMP HOSE .38-.87
23	076749	1	TANK COOLANT RECOVERY
24	0F1433	1	BRACKET 2.5L FORD WATER BOTTLE
25	048031C	2	CLAMP HOSE BAND 1/4
26	029032	1	HOSE 9/32 ID (40” LG)
27	049814	REF.	SCREW HHC M10-1.5 X 25 G8.8
28	046526	REF.	WASHER LOCK M10
29	022131	REF.	WASHER FLAT 3/8-M10 ZINC
30	0F7307	1	GUARD FAN RH C1 CPL
31	0F7308	1	GUARD FAN LH C1 CPL
34	029107	1	GROMMET 7/8 X 3/16 X 5/8
35	026850	4	WASHER SHAKEPROOF EXT 1/4 STL

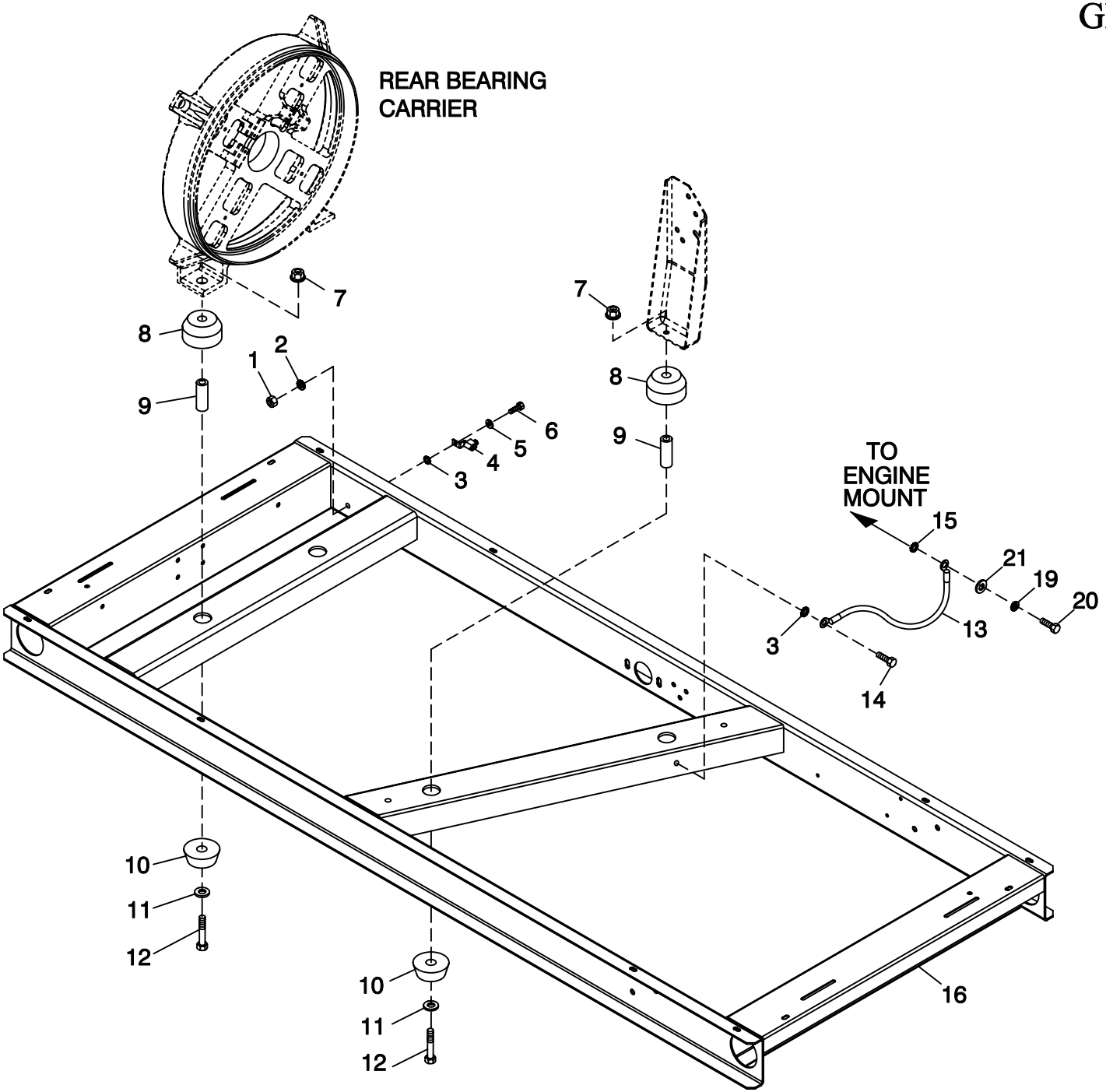

EXPLODED VIEW:
MOUNTING BASE 2.5L FORD
DRAWING #: 0F7416

REVISION: G-6148-A
DATE: 8/10/05

EXPLODED VIEW: MOUNTING BASE 2.5L FORD
DRAWING #: 0F7416

GROUP C

APPLICABLE TO:

ITEM	PART #	QTY.	DESCRIPTION
1	049813	1	NUT HEX M6 X 1.0 G8 YEL CHR
2	022097	1	WASHER LOCK M6-1/4
3	026850	2	WASHER SHAKEPROOF EXT 1/4 STL
4	055414	1	LUG SLDLSS #2-#8 X 17/64 CU
5	022473	1	WASHER FLAT 1/4-M6 ZINC
6	047411	1	SCREW HHC M6-1.0 X 16 G8.8
7	052860	4	NUT FLANGED HEX M12-1.75
8	052251	4	DAMPENER VIBRATION 40 BLUE
9	052257	4	SPACER .49 X .62 X 1.87 PWDR/ZNC
10	052252	4	DAMPENER VIBRATION
11	052259	4	WASHER FLAT M12
12	052891	4	SCREW HHC M12-1.75 X 80 G8.8
13	0536210261	1	ASSY WIRE #0 12.00"
14	074906	1	SCREW HHTT M6-1.0 X 20 BP
15	025507	REF	WASHER SHAKEPROOF EXT 7/16 STL
16	0F6935	1	MTG BASE, 2.5L FORD C1 CPL
19	046526	REF	WASHER LOCK M10
20	049814	REF	SCREW HHC M10-1.5 X 25 G8.8
21	022131	REF	WASHER FLAT 3/8-M10 ZINC

GROUP C

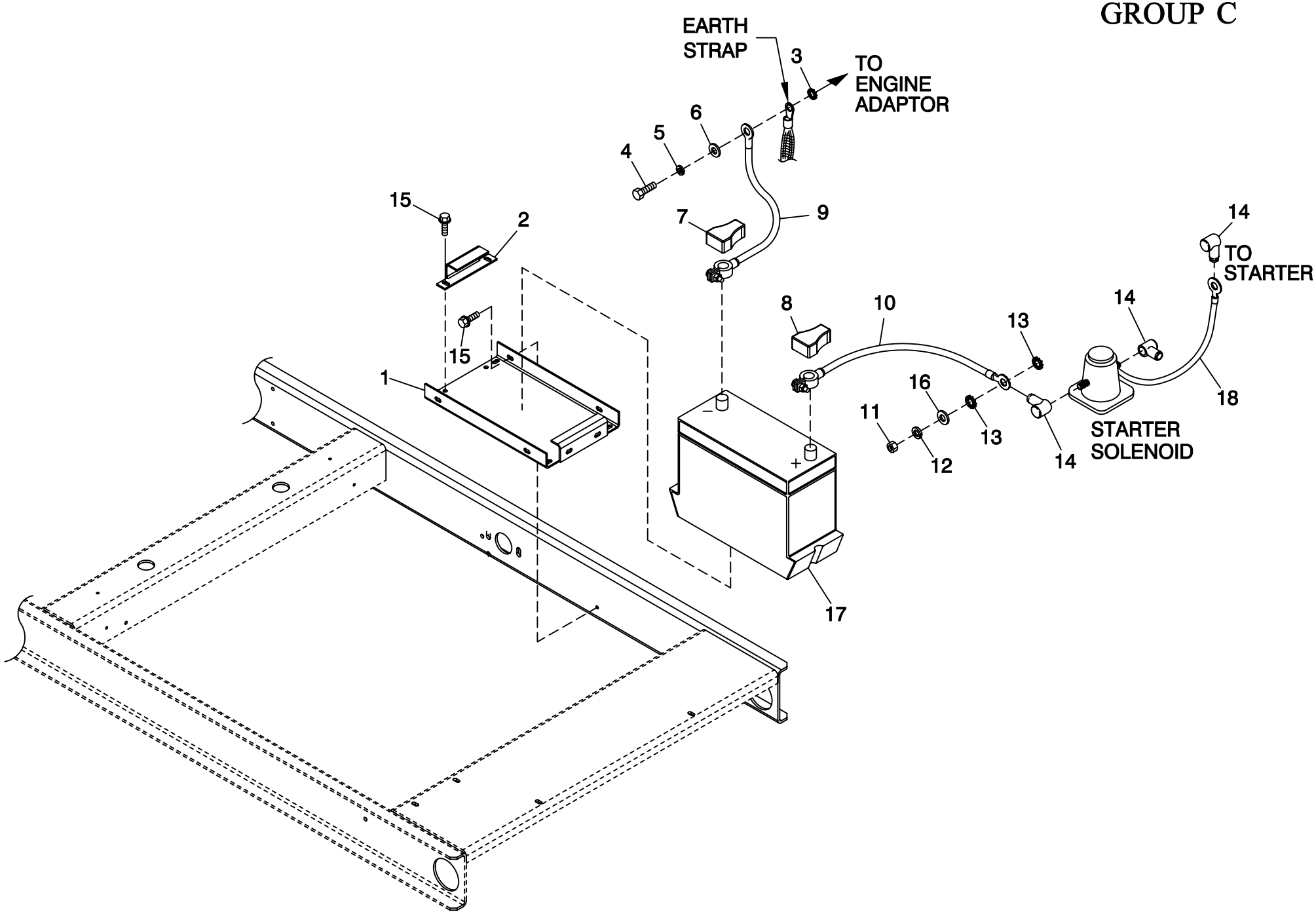

EXPLODED VIEW:
BATTERY C1 CPL
DRAWING #: 0F7422

REVISION: G-6517-D
DATE: 9/23/05

EXPLODED VIEW: BATTERY C1 CPL
DRAWING #: 0F7422

GROUP C

APPLICABLE TO:

ITEM	PART #	QTY.	DESCRIPTION
1	0F3408B	1	BATTERY TRAY C1 CPL
2	0F3411	1	STRAP BATTERY RETAINMENT
3	025507	REF	WASHER SHAKEPROOF EXT 7/16 STL
4	052647	REF	SCREW SHC M10-1.5 X 25 G12.9
5	046526	REF	WASHER LOCK M10
6	022131	REF	WASHER FLAT 3/8-M10 ZINC
7	050331A	REF	BATT POST COVER RED +
8	050331	REF	BATT POST COVER BLK -
9	038805J	1	CABLE BATTERY BLK #1 X 30.00
10	038804U	1	CABLE BATTERY RED #1 X 28.00
11	045771	REF	NUT HEX M8-1.25 G8 YEL CHR
12	022129	REF	WASHER LOCK M8-5/16
13	027482	REF	WASHER SHAKEPROOF EXT 5/16 STL
14	0F3976	3	BOOT CONTACTOR CABLES
15	0C2454	4	SCREW THF M6-1 X 16 N WA Z/JS
16	022145	REF	WASHER FLAT 5/16-M8 ZINC
17	077483	REF	BATTERY 12VDC 75-AH 26
18	0742600131	1	ASSY WIRE #16 RED 1.6

GROUP D

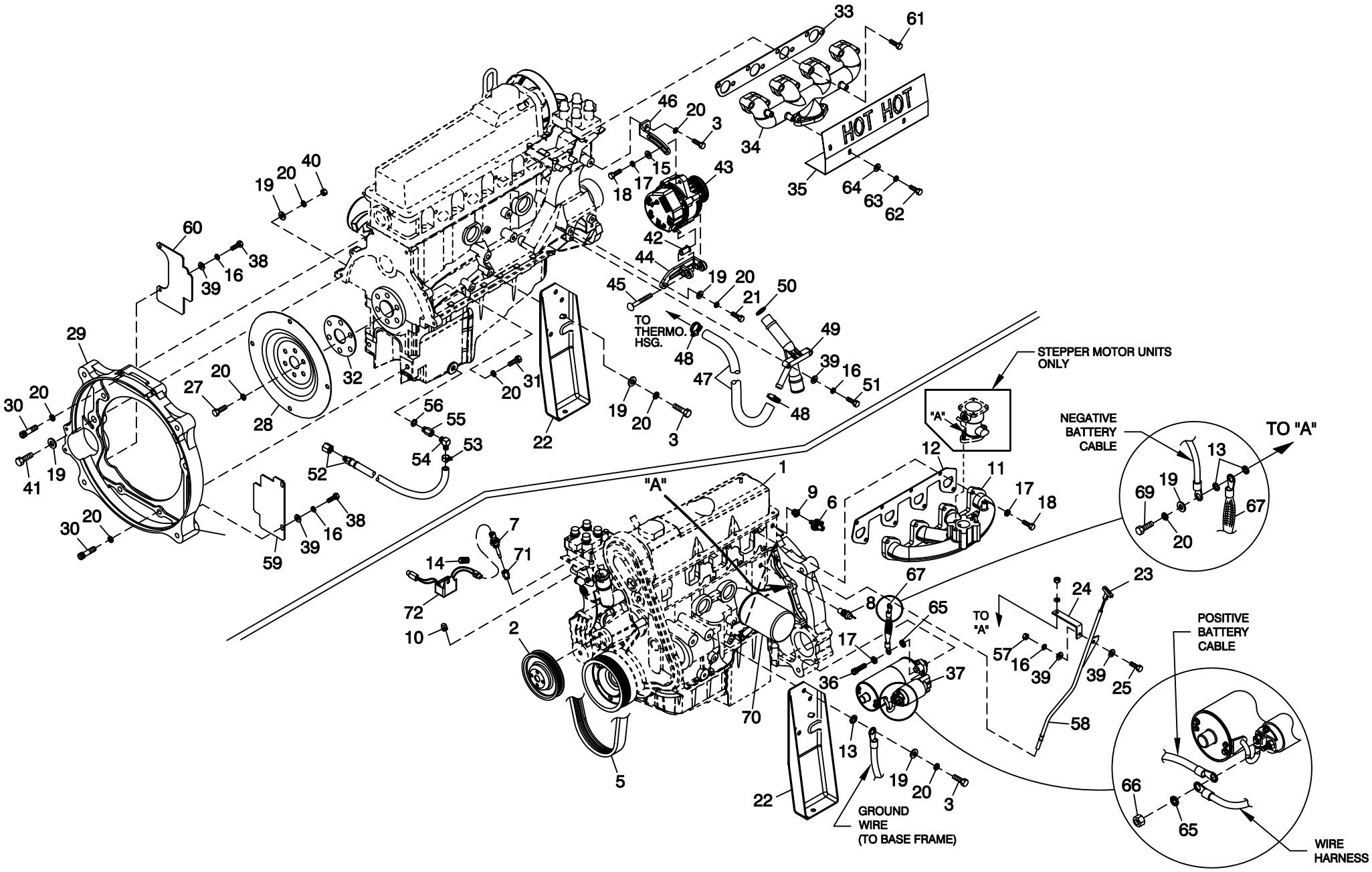

EXPLODED VIEW:
ENGINE COMMON PARTS 2.5L
DRAWING #: 0F7423

REVISION: G-7780-E
DATE: 3/28/06

EXPLODED VIEW: ENGINE COMMON PARTS 2.5L
DRAWING #: 0F7423
APPLICABLE TO: 2.5L FORD

GROUP D

ITEM	PART #	QTY.	DESCRIPTION
1	0E9909	REF	ENGINE 2.5L FORD
2	0E9739	1	PULLEY 2.5L FORD WATER PUMP
3	049814	7	SCREW HHC M10-1.5 X 25 G8.8
5	0D3488B	1	SERPENTINE BELT – 40.85" LENGTH
6	0A8584	1	SWITCH OIL PRESSURE 10PSI 2POL
7	0E2507	1	PROBE, COOLANT LEVEL 3/8NPTF
8	0A6751	1	SW-TMP 245 DEG 3/8 NPT
9	035579	1	BUSHING REDUCER 1/4 TO 1/8
10	026925	1	PLUG STD PIPE 3/8 STEEL SQ HD
11	0E9611	1	MANIFOLD INTAKE (MACHINED) (STEPPER MOTOR)
12	0E9681	1	GASKET 2.5L FORD INTAKE MAN.
13	025507	3	WASHER SHAKEPROOF EXT 7/16 STL
14	077043A	1	CONDUIT FLEX .38"ID (6"LG)
15	022145	1	WASHER FLAT 5/16-M8 ZINC
16	022097	7	WASHER LOCK M6-1/4

ITEM	PART #	QTY.	DESCRIPTION
17	022129	10	WASHER LOCK M8-5/16
18	043107	10	SCREW HHC M8-1.25 X 25 G8.8
19	022131	13	WASHER FLAT 3/8-M10 ZINC
20	046526	23	WASHER LOCK M10
21	052625	2	SCREW SHC M10-1.5 X 35 G12.9
22	0E9708	2	ENGINE FOOT 2.5L FORD
23	0E9738	1	DIPSTICK 2.5L FORD
24	0E9929	1	BRACKET DIPSTICK TUBE
25	042568	1	SCREW HHC M6-1.0 X 20 G8.8
26	0F7428	1	HARNESS ENGINE 2.5L R-100 CPL (NOT SHOWN)
27	0D5417	6	SCREW HHC M10-1.0 X 25 G10.9
28	0F3903B	1	FLEX PLATE 2 POLE 2.5L FORD
29	0E9655	1	ADAPT CASTING MACH 2.5L FORD
30	057192	4	SCREW SHC M10-1.5 X 30 G12.9
31	060619	2	SCREW SHC M10-1.50 X 40 G12.9
32	0E8940	1	SPACER FLEXPLATE HSB
33	0E9680	1	GASKET 2.5L FORD EXHAUST MAN.
34	0E9609	1	MANIFOLD EXHAUST (MACHINED)
35	0E9930	1	HEAT SHIELD EXHAUST MANIFOLD
36	049821	3	SCREW SHC M8-1.25 X 30 G12.9
37	0E9747	1	STARTER 12 VOLT
38	047411	4	SCREW HHC M6-1.0 X 16 G8.8
39	022473	8	WASHER FLAT 1/4-M6 ZINC
40	045772	2	NUT HEX M10-1.5 G8 YEL CHR
41	064416	2	SCREW HHC M10-1.5 X 45 G8.8
42	0F0252	1	SPRING BUSHING
43	0E9868	1	ALTERNATOR D.C
44	0F0035	1	BRKT D.C. ALTERNATOR (MACHINED)
45	026082	1	SCREW HHC 3/8-16 X 2-1/4 G5
46	0E9928	1	TENSIONER D.C. ALTERNATOR
47	0F0383	1	HOSE 2.5L FORD COOLANT BY-PASS
48	035473	2	CLAMP HOSE #12 .50-1.25
49	0E9737	1	LOWER HOSE ADAPTER 2.5L FORD
50	0F0393	1	O-RING 1-3/16 X 1-7/16 X 1/8
51	045757	2	SCREW HHC M6-1.0 X 25 G8.8
52	069860C	1	HOSE OIL DRAIN ASSY 21"
53	048031J	1	HOSE CLAMP BAND 5/8"
54	043790	1	BARBED EL 90 3/8 NPT X 3/8
55	077456	1	ADAPTER M12-1.75 3/8 NPT
56	052677	1	WASHER NYLON .50 X .87 X .06
57	049813	1	NUT HEX M6 X 1.0 G8 YEL CHR
58	0E9738A	1	DIPSTICK TUBE 2.5L FORD
59	0F1132	1	COVER R/H SIDE ENGINE ADAPTOR
60	0F1133	1	COVER L/H SIDE ENGINE ADAPTOR
61 *	059355	8	SCREW SHC M10-1.50 X 50 G12.9
62	085296	3	SCREW HHC 1/4-20 X 1/2 SS
63	083896	3	WASHER LOCK 1/4-M6 SS
64	084929	3	WASHER FLAT 1/4 SS
65	027482	1	WASHER SHAKEPROOF EXT 5/16 STL
66	045771	REF	NUT HEX M8-1.25 G8 CLEAR ZINC
67	021991	1	EARTH STRAP
69	052647	1	SCREW SHC M10-1.5 X 25 G12.9
70	0F4604	REF	FILTER 2.5L FORD OIL
71	0F6749	1	ADAPTER 3/8 TO 3/8 BRASS
72	0F9483	1	ASSY PCB WATERLEVEL SNSR INTFC

* NOTE: TORQUE TO 44 FT/LBS.

GROUP E

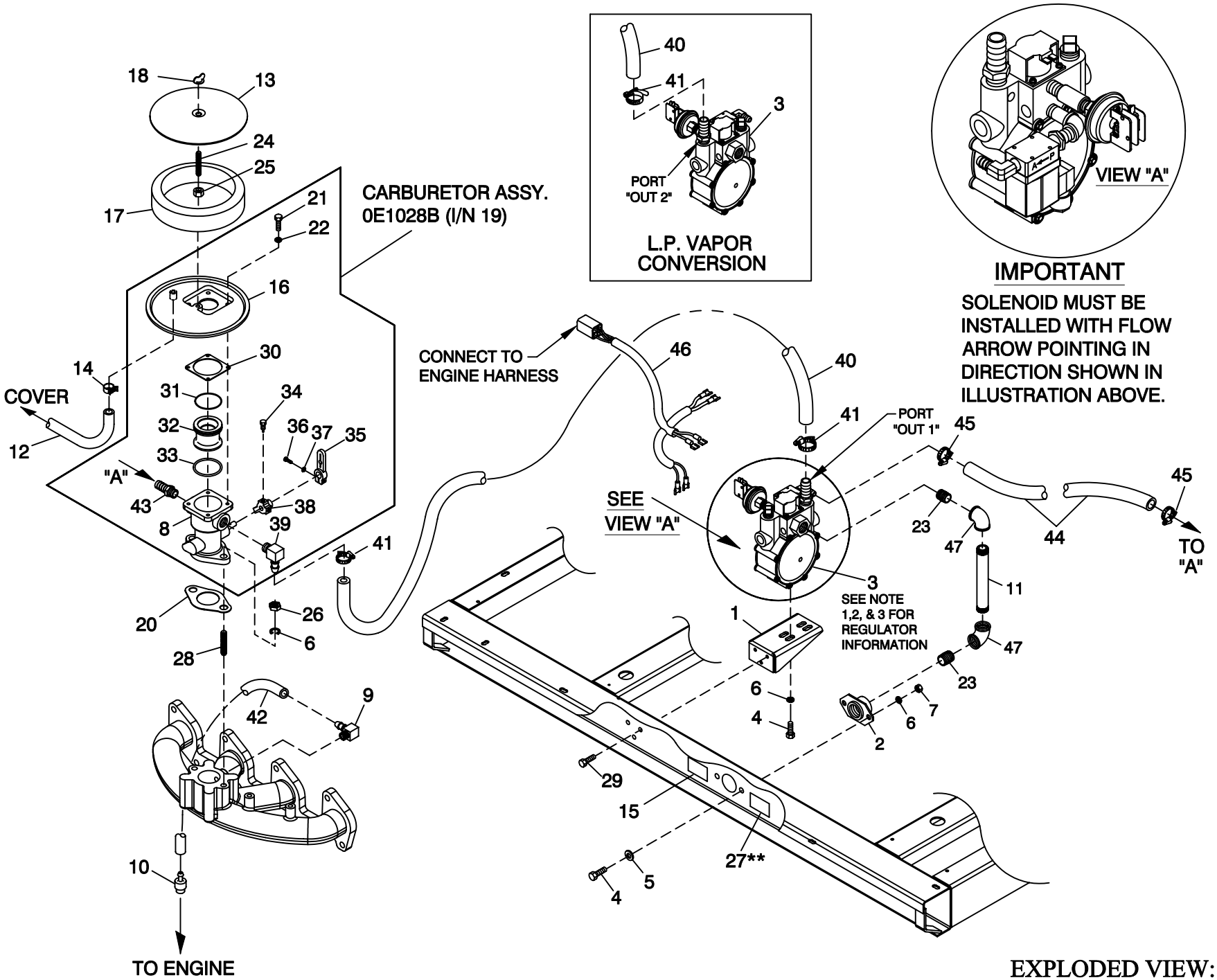

EXPLODED VIEW:
NATURAL GAS FUEL OR LPV
DRAWING #: 0F7440

REVISION: G-7442-A
DATE: 2/17/06

EXPLODED VIEW: NATURAL GAS FUEL OR LPV
DRAWING #: 0F7440

GROUP E

APPLICABLE TO: 2.5L FORD

ITEM	PART #	QTY.	DESCRIPTION
1	0E8456	1	BRACKET FUEL REGULATOR
2	075580	1	FLANGE FUEL INLET
3	0F6364	1	FUEL REG. 2.5L FORD REWORK
4	039253	4	SCREW HHC M8-1.25 X 20 G8.8
5	022145	2	WASHER FLAT 5/16 ZINC
6	022129	6	WASHER LOCK M8-5/16
7	045771	2	NUT HEX M8-1.25 G8 YEL CHR
8 *	0F1570	1	BODY CARBURETOR ASSEMBLY
9	0A6344	1	BARBED EL 90 1/8 NPT X 3/8
10	0F3994	REF.	PCV VALVE 2.5L FORD
11	026582	1	NIPPLE PIPE 3/4 NPT X 4" LG BI
12	0F0397	1	HOSE CRANKCASE BREATHER
13	0A5547	1	COVER AIR CLEANER
14	0C7649	1	CLAMP HOSE .38-.87
15	0D1509	1	DECAL INLET PRESSURE
16 *	0E0591	1	ADAPTER CARB. TO AIR CLNR
17	059402	1	FILTER ELEMENT
18	037561	1	NUT WING 1/4-20 NYLK
19	0E1028B	1	CARBURETOR ASSY. 2.5L FORD
20	059401	1	CARBURETOR GASKET
21 *	091526	4	SCREW PPHM M5-0.8 X 12 ZNC
22 *	049226	4	WASHER LOCK M5
23	026915	2	NIPPLE CLOSE 3/4 X 1.375
24	062522	1	STUD TH 1/4-20 X 3 G2 ZNC FULL
25	022127	1	NUT HEX 1/4-20 STEEL
26	022259	2	NUT HEX 5/16-18 STEEL
27 **	050279	1	DECAL FUEL INLET NG
	050280	1	DECAL FUEL INLET LPG
28	0A6125	2	STUD 5/16-18 X 1.25 F THR
29	0C2454	3	SCREW TH-FRM M6-1 X 16 N WA Z/JS
30 *	0E1104	1	GASKET AIR CLEANER ADAPTER
31 *	0E0668	1	O-RING 2-028 1.38 X 1.50 X .06
32 *	0E0590A	1	VENTURI 20MM
33 *	0C5133	1	0-RING 29.82 X 2.62
34 *	0E0665	1	SCREW THROTTLE PIN STOP
35 *	0E1108A	1	THROTTLE ARM REWORK 2.5L FORD
36 *	033138	1	SCREW HHM #10-32 X 5/8
37 *	022152	1	WASHER LOCK #10
38 *	0E0645	1	LEVER,THROTTLE STOP
39 *	034339	1	BARBED EL 90 3/8 NPT X 5/8
40	059193D	1	HOSE 5/8 ID X 20.5" LG
41	057823	2	CLAMP HOSE #10 .56 - 1.06
42	0F0382	1	HOSE 3/8" 90 DEG 2.5L PVC
43 *	089617	1	BARBED STR 1/4NPT X 1/4 MALE
44	030340	1	HOSE 1/4 ID SAE 30R7 (24" LG)
45	040173	2	CLAMP HOSE #5.5 .62-.62
46	0F6155	1	HARNESS FUEL JUMPER SINGLE REG
47	026812	2	ELBOW 90D 3/4 NPT

* INCLUDED IN ITEM 19 (CARBURETOR ASSY)

NOTES:

1. REGULATOR (I/N 3) AS SHOWN IN ILLUSTRATION IS SET UP FOR NATURAL GAS APPLICATION.
2. TO CONFIGURE REGULATOR FOR LP VAPOR, SWITCH HOSE BARB, HOSE CLAMP (I/N 41) AND HOSE (I/N 40) FROM "OUT-1" TO "OUT-2". REPLACE PIPE PLUG FROM "OUT-2" TO "OUT-1". USE PIPE SEALANT ON HOSE BARB AND PIPE PLUG. MAKE SURE TO KEEP PORTS FREE FROM DEBRIS DURING RECONFIGURATION PROCESS.

3.** FOR LP VAPOR APPLICATION SUBSTITUE LPG FUEL INLET DECAL P/N 050280 FOR NG FUEL INLET DECAL P/N 050279 (ITEM 27).

4 . WHEN SWITCHING FUEL TYPES, THE PROPER DIP SWITCH SITTINGS MUST BE MADE TO THE CONTROL PANEL. SEE OWNERS MANUAL, FUEL SECTION FOR MORE DETAILS.

GROUP F

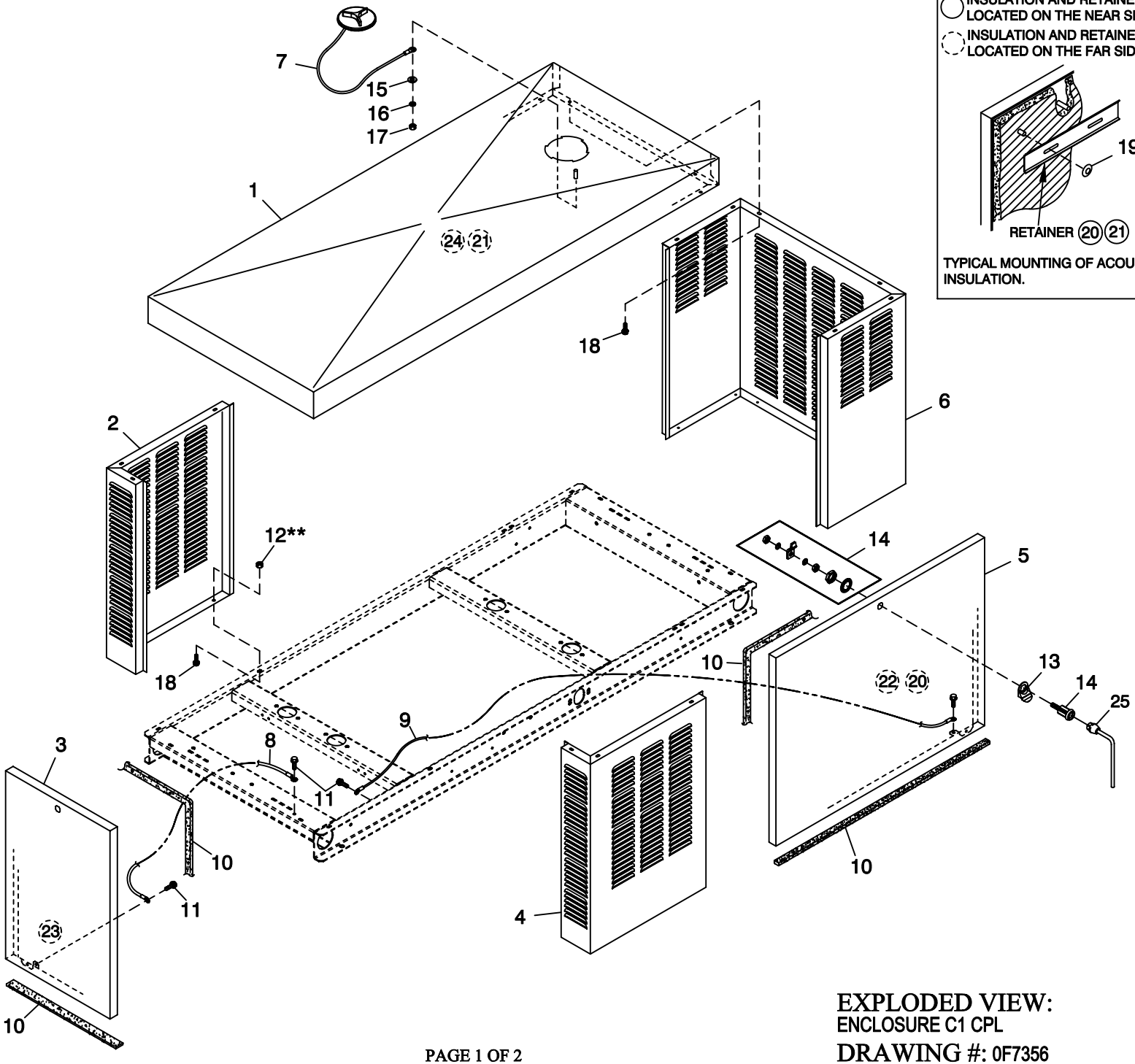

EXPLODED VIEW:
ENCLOSURE C1 CPL
DRAWING #: 0F7356

REVISION: G-7989-C
DATE: 4/25/06

EXPLODED VIEW: ENCLOSURE C1 CPL
DRAWING #: 0F7356

GROUP F

APPLICABLE TO:

ITEM	PART #	QTY.	DESCRIPTION
1	0F7003 (XX)	1	ROOF C1 CPL
2	0F7004 (XX)	1	CORNER POST LH SIDE C1 CPL
3	0F7008 (XX)	1	DOOR REAR C1 CPL
4	0F7005 (XX)	1	CORNER POST RH SIDE C1 CPL
5	0F7007 (XX)	2	DOOR LH & RH SIDE C1 CPL
6	0F7006 (XX)	1	DUCT FRONT DISCHARGE C1 CPL
7	0C2634A	1	ASSEMBLY COVER ACCESS
8	0912970091	1	ASSY WIRE 14AWG 13.8" GRN/YEL
9	0912970090	2	ASSY WIRE 14AWG 33.5" GRN/YEL
10	0E5968	1	GASKET EXTRUDED TRIM (356” LG)
11	0E3257	6	SCREW HWHTF M6-1.0 X 16
12 **	077992	18	NUT HEX LOCK M6-1.0 SS NY INS
13	0F5049	3	TAB PULL
14	0F5048D	3	VISE-ACTION LATCH SLOTTED CIR
15	022473	1	WASHER FLAT 1/4-M6 ZINC
16	022097	1	WASHER LOCK M6-1/4
17	022127	1	NUT HEX 1/4-20 STEEL
18	0C2454	24	SCREW THF M6-1 X 16 N WA Z/JS
19	078115	20	WASHER SELF LOCKING DOME
20	0F3890B	2	RETAINER INSULATION (820)
21	0F3890	4	RETAINER INSULATION (450)
22	0F7365	2	INSULATION SIDE DOOR C1
23	0F7365B	1	INSULATION REAR DOOR C1 CPL
24	0F7365A	1	INSULATION ROOF C1 CPL
25	0F8869D	1	KEY VISE-ACTION LATCH SLOT CIR

OPTIONAL COMPARTMENT MATERIALS:
ALL P/N’S WITH AN (XX) SUFFIX INDICATE A MULTIPLE MATERIAL AND COLOR OPTION.
USE THE FOLLOWING LEGEND TO IDENTIFY THE CORRECT PART NUMBER:

PART NO.	MATERIAL	COLOR
0XXXXXSN	STEEL	TAN
0XXXXXAN	ALUMINUM	TAN
0XXXXXSG	STEEL	GRAY
0XXXXXAG	ALUMINUM	GRAY

** ALUMINUM ENCLOSURE NOTE: ALL ENCLOSURE PANELS THAT FASTEN TO THE BASE FRAME MUST BE SECURED USING ITEM 18 & 11 THREAD FORMING FASTENER AND ITEM 12 LOCK NUT. LOCK NUT IS TO BE INSTALLED AFTER THREAD FORMING FASTENER HAS PENETRATED THROUGH EXTRUSIONS IN ENCLOSURE PANELS. ALL ROOF PANELS ARE TO BE SECURED IN THE SAME MANNER.

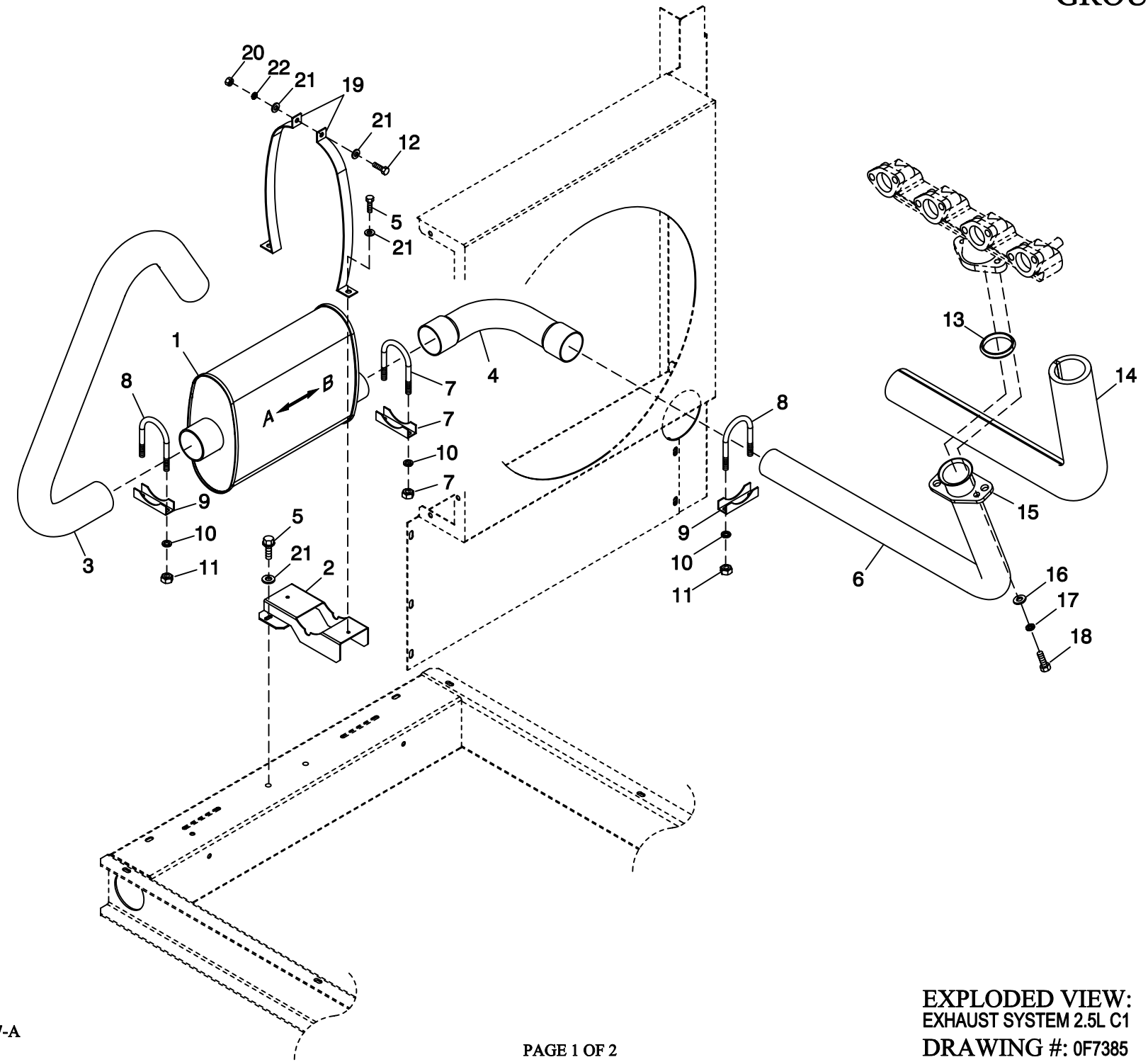

EXPLODED VIEW:
EXHAUST SYSTEM 2.5L C1
DRAWING #: 0F7385

REVISION: G-6457-A
DATE: 9/15/05

EXPLODED VIEW: EXHAUST SYSTEM 2.5L C1
DRAWING #: 0F7385

GROUP F

APPLICABLE TO:

ITEM	PART #	QTY.	DESCRIPTION
1	0F7366	1	MUFFLER C1
2	0F7647	1	MUFFLER SADDLE
3	0F8095	1	PIPE EXHAUST OUTLET
4	0F7172	1	PIPE EXH INLET MFLR SIDE 2.5L
5	0E3257	4	SCREW HWHTF M6-1.0 X 16
6	0F7382	1	PIPE EXH INLET MANIFLD SIDE 2.5
7	0C6119	1	BOLT U 5/16-18 X 2-1/4
8	036434	2	BOLT U 5/16-18 X 2.09
9	036449	2	SADDLE 2 INCH
10	022129	6	WASHER LOCK M8-5/16
11	022259	4	NUT HEX 5/16-18 STEEL
12	038750	3	SCREW HHC M6-1.0 X 30 G8.8
13	044149	1	GASKET EXHAUST RING
14	0E0170A	1	EXHAUST BLANKET 988MM
15	0E8816	1	FLANGE EXHAUST 2" PIPE
16	022131	2	WASHER FLAT 3/8-M10 ZINC
17	085917	2	WASHER LOCK 3/8 SS
18	0D2611	2	SCREW HHC 3/8-16 X 1-3/4 SS
19	0F7644	2	MUFFLER STRAP
20	049813	1	NUT HEX M6 X 1.0 G8 YEL CHR
21	022473	6	WASHER FLAT 1/4-M6 ZINC
22	022097	1	WASHER LOCK M6-1/4

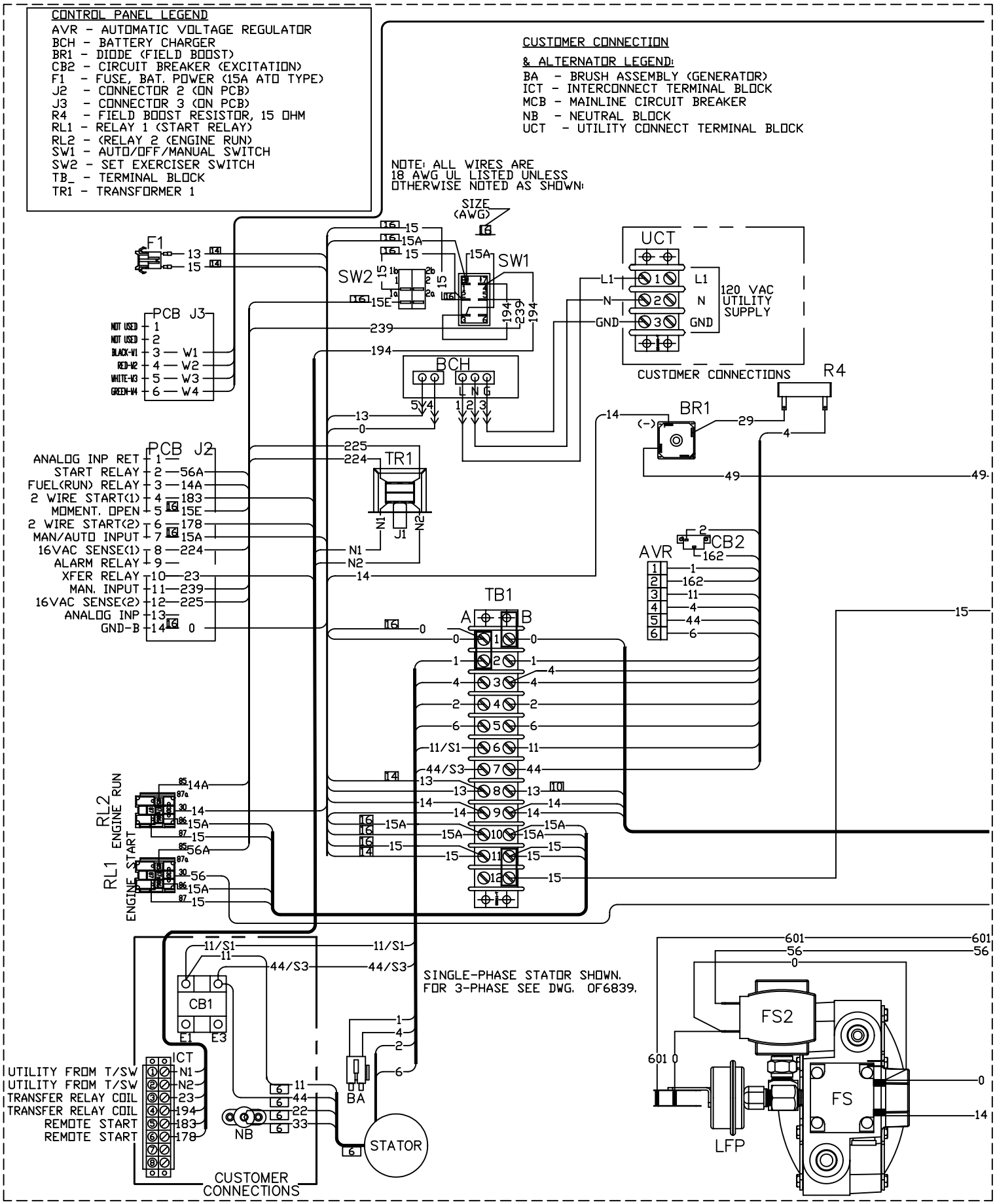

WIRING - DIAGRAM

2.5L COMMERCIAL PROD LINE

DRAWING #: 0F7104

REVISION: *

DATE: 05/23/05

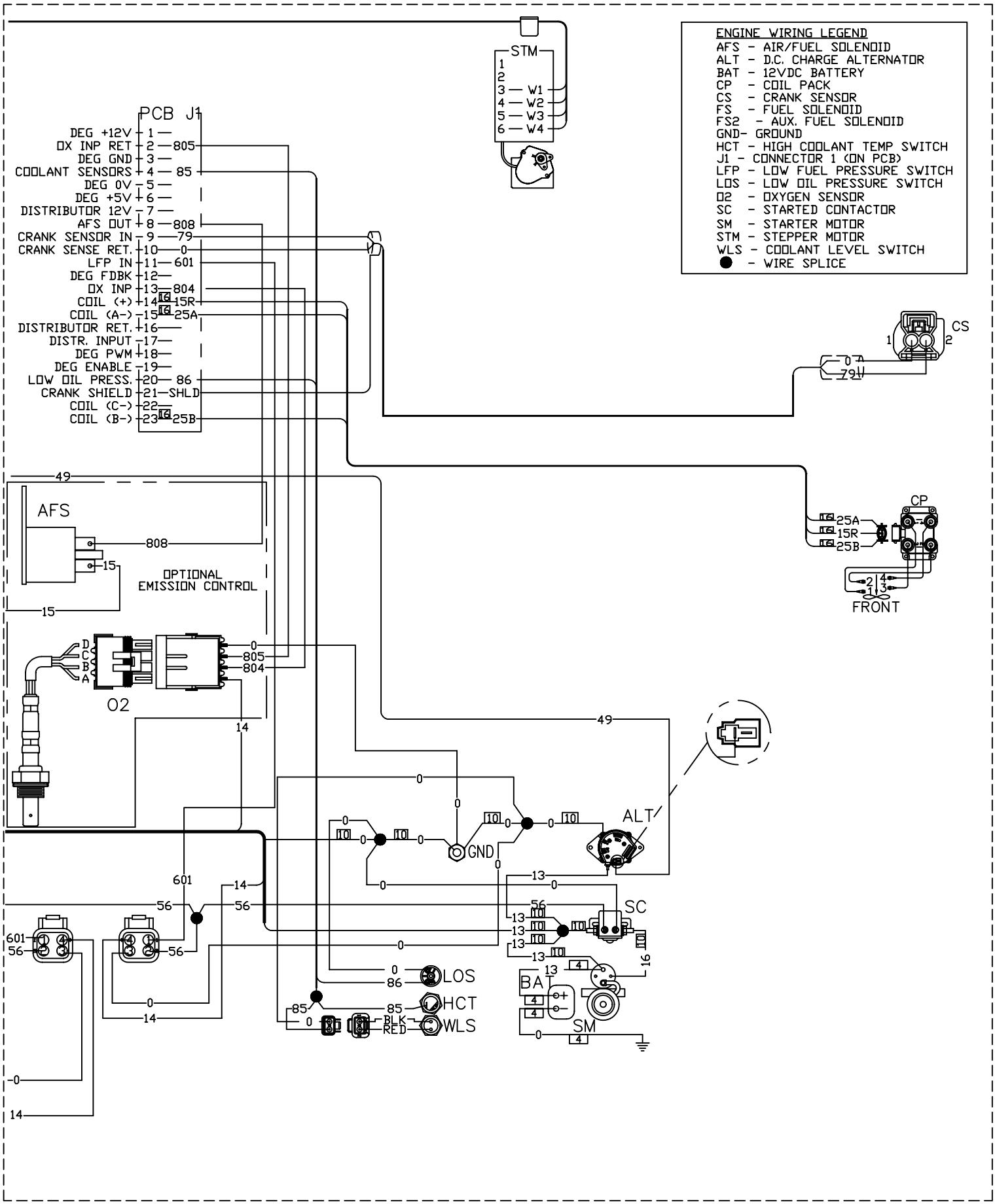
ENGINE WIRING LEGEND
AFS - AIR/FUEL SOLENOID
ALT - D.C. CHARGE ALTERNATOR
BAT - 12VDC BATTERY
CP - COIL PACK
CS - CRANK SENSOR
FS - FUEL SOLENOID
FS2 - AUX. FUEL SOLENOID
GND- GROUND
HCT - HIGH COOLANT TEMP SWITCH
J1 - CONNECTOR 1 (ON PCB)
LFP - LOW FUEL PRESSURE SWITCH
LOS - LOW OIL PRESSURE SWITCH
O2 - OXYGEN SENSOR
SC - STARTED CONTACTOR
SM - STARTER MOTOR
STM - STEPPER MOTOR
WLS - COOLANT LEVEL SWITCH
● - WIRE SPLICE
STM
W1
W2
W3
W4
PCB J1
DEG +12V 1
OX INP RET 2 805
DEG GND 3
COOLANT SENSORS 4 85
DEG 0V 5
DEG +5V 6
DISTRIBUTOR 12V 7
AFS OUT 8 808
CRANK SENSOR IN 9 79
CRANK SENSE RET. 10 0
LFP IN 11 601
DEG FDBK 12
OX INP 13 804
COIL (+) 14 15R
COIL (A-) 15 25A
DISTRIBUTOR RET. 16
DISTR. INPUT 17
DEG PWM 18
DEG ENABLE 19
LOW OIL PRESS. 20 86
CRANK SHIELD 21 SHLD
COIL (C-) 22
COIL (B-) 23 25B
CS
AFS
OPTIONAL
EMISSION CONTROL
O2
CP
FRONT
ALT
GND
SC
BAT
SM
LOS
HCT
WLS
BLK
RED

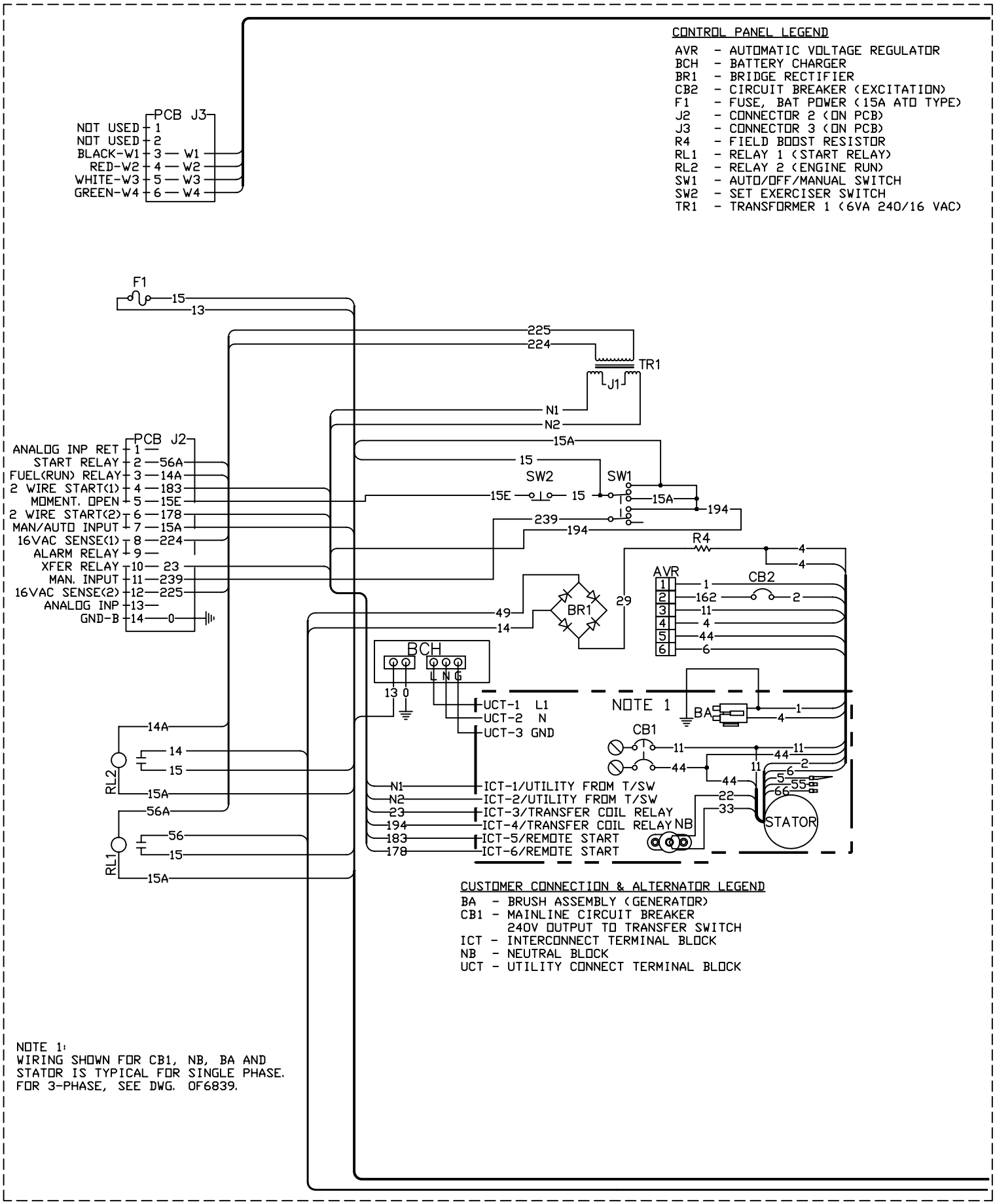

SCHEMATIC - DIAGRAM

2.5L COMM PROD LINE

DRAWING #: 0F7420

REVISION: *

DATE: 08/04/05

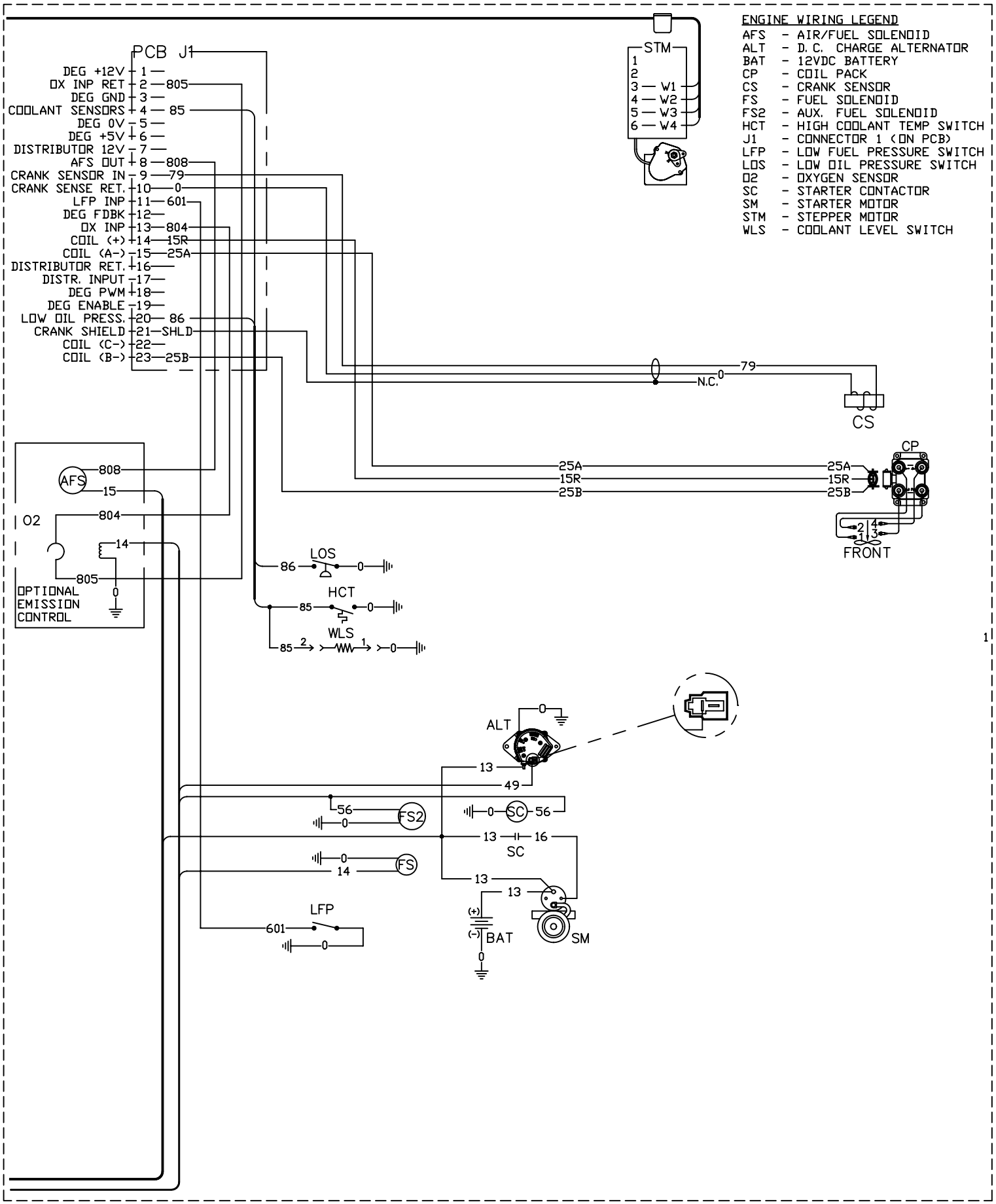

SCHEMATIC - DIAGRAM

2.5L COMM PROD LINE

DRAWING #: 0F7420

REVISION: *

DATE: 08/04/05

WEIGHT DATA
1.5L 20KW - 289KG [774.5lb] 2.5L 25KW - 389KG [1043lb]
WOODEN SHIPPING SKIDS INCREASE OVERALL WEIGHT - T.B.D.

NOTES:

1) MINIMUM RECOMMENDED CONCRETE PAD SIZE: 1041 (41.0") WIDE X 2108 (83.0") LONG. REFERENCE INSTALLATION GUIDESUPPLIED WITH UNIT FOR CONCRETE PAD GUIDELINES.

2) ALLOW SUFFICIENT ROOM ON ALL SIDES OF THE GENERATOR FOR MAINTENANCE AND SERVICING. THIS UNIT MUST BE INSTALLED IN ACCORDANCE WITH CURRENT APPLICABLE NFPA 37 AND NFPA 70 STANDARDS AS WELL AS ANY OTHER FEDERAL, STATE AND LOCAL CODES FOR MINIMUM DISTANCES FROM OTHER STRUCTURES.

3) CIRCUIT BREAKER INFORMATION:
SEE SPECIFICATION SHEET WITHIN OWNERS MANUAL

4) INSIDE STUB-UP AREA FOR AC LOAD LEAD CONDUIT CONNECTION, NEUTRAL CONNECTION, BATTERY CHARGER 120 VOLT AC (.5 AMP MAX.) CONNECTION, AND ACCESS TO TRANSFER SWITCH CONTROL WIRES. REMOVE FRONT COVER FOR ACCESS.

4A) FIELD CUT HOLE IS ONLY REQUIRED FOR MOUNTING OF GENERATOR ON AN EXISTING PAD.

5) REFERENCE OWNERS MANUAL FOR LIFTING WARNINGS.

6) REMOVE LIFT-OFF ENCLOSURE TO ACCESS EXHAUST MUFFLER.

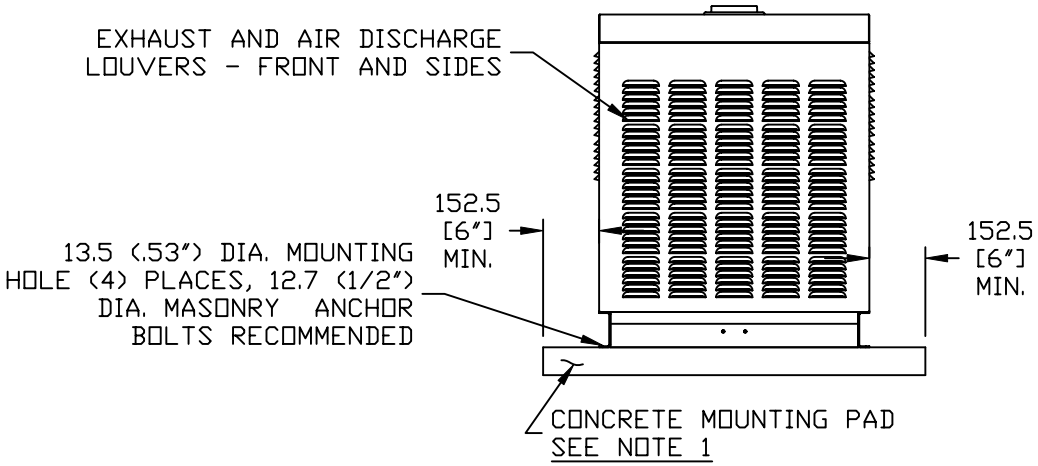

FRONT VIEW

EXPLODED VIEW:
INSTLN DRAWING 1.5L 20KW & 2.5L 25KW
DRAWING #: 0F7555

REVISION: G-8317-A
DATE: 6/21/06

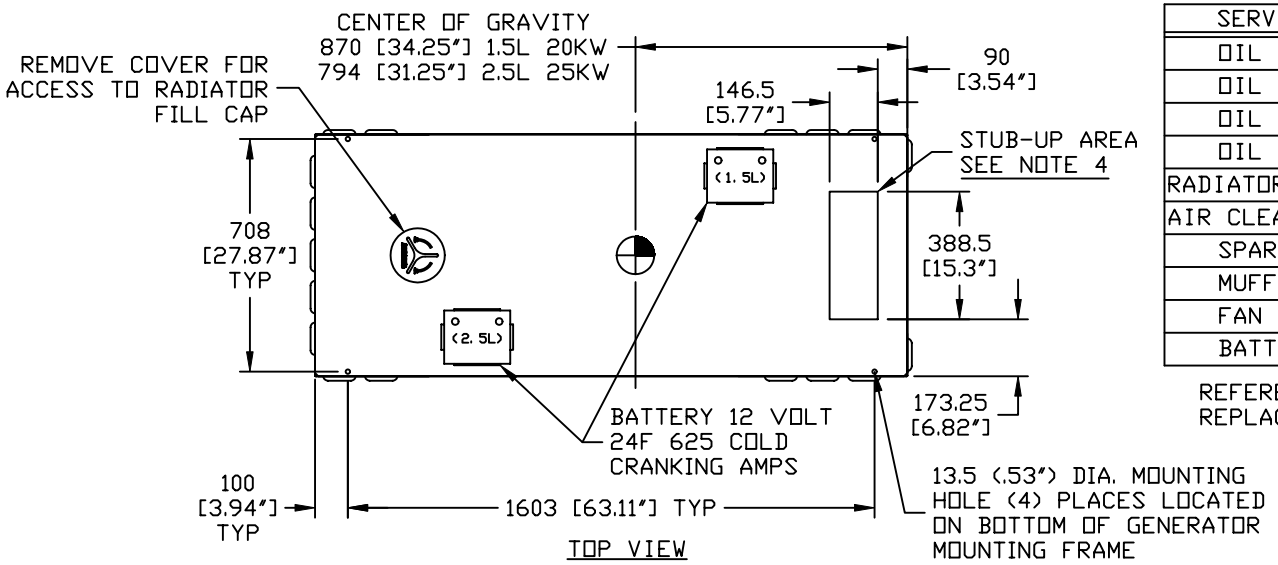

SERVICE ITEM ACCESSIBILITY CHART

SERVICE ITEM	1.5L 20KW	2.5L 25KW
OIL FILL CAP	EITHER DOOR	EITHER DOOR
OIL DIP STICK	THRU LEFT DOOR	THRU LEFT DOOR
OIL FILTER	THRU RIGHT DOOR	THRU LEFT DOOR
OIL DRAIN HOSE	THRU RIGHT DOOR	THRU RIGHT DOOR
RADIATOR DRAIN HOSE	THRU LEFT DOOR	THRU LEFT DOOR
AIR CLEANER ELEMENT	THRU RIGHT DOOR	THRU LEFT DOOR
SPARK PLUGS	THRU LEFT DOOR	THRU LEFT DOOR
MUFFLERS	SEE NOTE 6	SEE NOTE 6
FAN BELT	EITHER DOOR	EITHER DOOR
BATTERY	THRU RIGHT DOOR	THRU LEFT DOOR

REFERENCE OWNERS MANUAL FOR PERIODIC REPLACEMENT PART LISTINGS

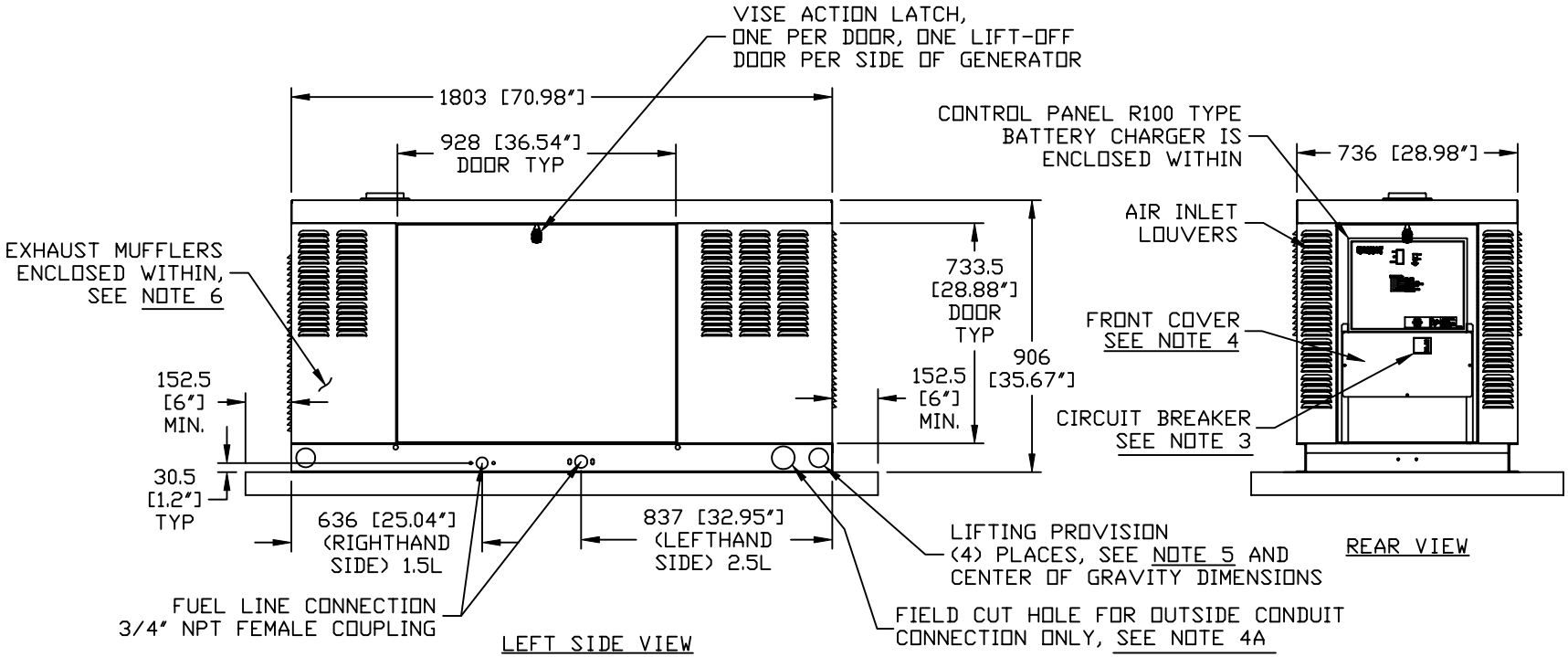

EXPLODED VIEW:
INSTLN DRAWING 1.5L 20KW & 2.5L 25KW
DRAWING #: 0F7555

GENERAC POWER SYSTEMS STANDARD LIMITED WARRANTY FOR HOME STANDBY/LIGHT COMMERCIAL PRODUCT 45kW AND BELOW

For a period of two (2) years from the date of sale, or start-up by Authorized/Certified Generac Power Systems Dealer, or branch thereof, Generac Power Systems, Inc. will, at its option, repair or replace any part(s) which, upon examination, inspection, and testing by Generac Power Systems or an Authorized/Certified Generac Power Systems Dealer, or branch thereof, is found to be defective under normal use and service, in accordance with the warranty schedule set forth below. Any equipment that the purchaser/owner claims to be defective must be examined by the nearest Authorized/Certified Generac Power Systems Dealer, or branch thereof. This warranty applies only to Generac Power Systems Generators used in "Standby" applications, as Generac Power Systems, Inc. has defined Standby, provided said generator has been properly installed and inspected on-site by appropriate personnel. Scheduled maintenance, as outlined by the generator owner's manual, is highly recommended. This should be performed by an Authorized/Certified Generac Power Systems Dealer, or branch thereof. This will verify service has been performed on the unit throughout the warranty period.

WARRANTY SCHEDULE

YEARS ONE and TWO — Limited comprehensive coverage on mileage, labor, and parts listed.
• - ALL COMPONENTS
*Start-up and/or On-line Registration, or Registration Card, along with Proof of Purchase, must be performed and/or sent in.

Guidelines:

- Any and all warranty repairs and/or concerns, must be performed and/or addressed by an Authorized/Certified Generac Power Systems Dealer, or branch thereof.
- A Generac Power Systems, Inc. Transfer Switch is highly recommended to be used in conjunction with the genset. If a Non - Generac Power Systems, Inc. Transfer Switch is substituted for use and directly causes damage to the genset, no warranty coverage shall apply.
- All warranty expense allowances are subject to the conditions defined in Generac Power Systems Warranty, Policies, and Procedures Flat Rate Manual.
- Units that have been resold are not covered under the Generac Power Systems Warranty, as this Warranty is not transferable.
- Unit enclosure is only covered against rust or corrosion the first year of the warranty provision.
- Use of Non-Generac replacement part(s) will void the warranty in its entirety.
- Engine coolant heaters (block-heaters), heater controls and circulating pumps are only covered during the first year of the warranty provision (If applicable).

THIS WARRANTY SHALL NOT APPLY TO THE FOLLOWING:

1. Any unit built/manufactured prior to January 1, 2005.
2. Costs of normal maintenance (i.e. tune-ups, associated part(s), adjustments, loose/leaking clamps, installation and start-up).
3. Any failure caused by contaminated fuels, oils, coolants/antifreeze or lack of proper fuels, oils or coolants/antifreeze.
4. Units sold, rated or used for "Prime Power", "Trailer Mounted" or "Rental Unit" applications as Generac Power Systems have defined Prime Power, Trailer Mounted or Rental Unit. Contact a Generac Power Systems Distributor for Prime Power, Trailer Mounted or Rental Unit definition and warranty.
5. Units used for prime power in place of existing utility power where utility is present or in place of utility power where utility power service does not normally exist.
6. Failures caused by any external cause or act of God such as, but not limited to, collision, fire, theft, freezing, vandalism, riot or wars, lightning, earthquake, windstorm, hail, volcanic eruption, water or flood, tornado, hurricane, terrorist acts or nuclear holocaust.
7. Products that are modified or altered in a manner not authorized by Generac Power Systems in writing.
8. Failures due, but not limited to, normal wear and tear, accident, misuse, abuse, negligence, or improper installation or sizing.
9. Any incidental, consequential or indirect damages caused by defects in materials or workmanship, or any delay in repair or replacement of the defective part(s).
10. Failure due to misapplication, misrepresentation, or bi-fuel conversion.
11. Telephone, facsimile, cell phone, satellite, internet, or any other communication expenses.
12. Rental equipment used while warranty repairs are being performed (i.e. rental generators, cranes, etc.).
13. Overtime, holiday, or emergency labor.
14. Planes, ferries, railroad, busses, helicopters, snowmobiles, snow-cats, off-road vehicle or any other mode of transportation deemed abnormal.
15. Any and all expenses incurred investigating performance complaints unless defective Generac materials and/or workmanship were the direct cause of the problem.
16. Starting batteries, fuses, light bulbs, engine fluids, and overnight freight cost for replacement part(s).

THIS WARRANTY IS IN PLACE OF ALL OTHER WARRANTIES, EXPRESSED OR IMPLIED, SPECIFICALLY, GENERAC POWER SYSTEMS MAKES NO OTHER WARRANTIES AS TO THE MERCHANTABILITY OR FITNESS FOR A PARTICULAR PURPOSE. Some states do not allow limitations on how long an implied warranty lasts, so the above limitation may not apply to purchaser/owner.

GENERAC POWER SYSTEMS ONLY LIABILITY SHALL BE THE REPAIR OR REPLACEMENT OF PART(S) AS STATED ABOVE. IN NO EVENT SHALL GENERAC POWER SYSTEMS BE LIABLE FOR ANY INCIDENTAL, OR CONSEQUENTIAL DAMAGES, EVEN IF SUCH DAMAGES ARE A DIRECT RESULT OF GENERAC POWER SYSTEMS, INC. NEGLIGENCE.

Some states do not allow the exclusion or limitation of incidental or consequential damages, so the above limitations may not apply to purchaser/owner. Purchaser/owner agrees to make no claims against Generac Power Systems, Inc. based on negligence. This warranty gives purchaser/owner specific legal rights. Purchaser/owner also may have other rights that vary from state to state.

Generac Power Systems, Inc. · P.O. Box 8 · Waukesha, WI 53187
Ph: (262) 544-4811 · Fax: (262) 544-4851

Bulletin 0171360SVE / Printed in U.S.A. 7.05