# GROUP D

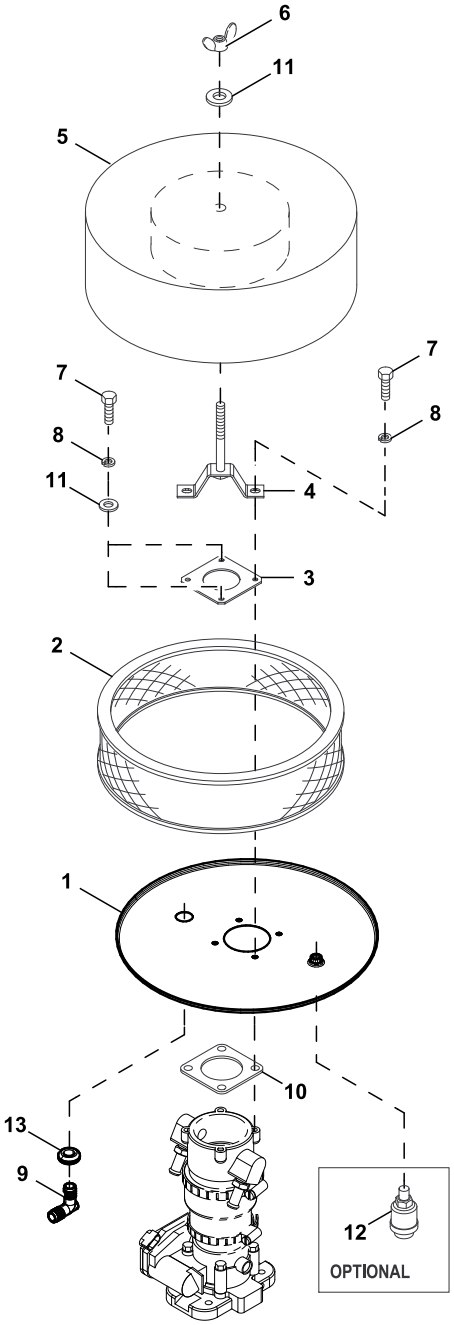


## NG / LPV

Revision : CN-0008186-G
Date : 7/11/17



Exploded View : EV AIR CLEANER
Drawing No. : 0F3569

**EXPLODED VIEW: EV AIR CLEANER**

**DRAWING #: 0F3569**

# GROUP D

| ITEM | PART# | QTY. | DESCRIPTION |
|---|---|---|---|
| 1 | 0D2513D | 1 | AIR CLNR BTM PLT W/CPLR 8.1L |
| | 0D2513E | 1 | PLATE AIR CLEANER W/COUPLER |
| 2 | 0F5419 | 1 | ELEMENT AIR FILTER |
| 3 | 0F4268 | 1 | TOP PLATE VENTURI |
| 4 | 0F4270A | 1 | HOLD DOWN AIR CLEANER PLATED |
| 5 | 0F6977 | 1 | PLATE AIR CLEAN TOP 5.4L/6.8L |
| 6 | 037561 | 1 | NUT WING 1/4-20 NYLK |
| 7 | 047411 | 4 | SCREW HHC M6-1.0 X 16 G8.8 |
| 8 | 022097 | 4 | WASHER LOCK M6-1/4 |
| 9 | 057795B | REF | BARBED EL 90 5/8 PLASTIC |
| 10 | 0F4269 | 1 | GASKET MIXER BODY |
| 11 | 022473 | 3 | WASHER FLAT 1/4-M6 ZINC |
| 12 | 0A4256 | 1 | INDICATOR FILTER MINDER (USE WITH ITEM #1 P/N 0D2513E) |
| 13 | 0G5954 | 1 | GROMMET .625 X 1.25 X .433 |