GROUP G

WEIGHT DATA				
ENGINE/KW	ENCLOSURE MATERIAL	WEIGHT (GENSET ONLY) KG [LBS]	WEIGHT (WOODEN SHIPPING CRATE/SKID) KG [LBS]	SHIPPING WEIGHT (SKID AND GENSET) KG [LBS]
2.4L/25KW	STEEL	631 [1393]	44 [98]	676 [1491]
	ALUMINUM	579 [1276]	44 [98]	623 [1374]
2.4L/35KW	STEEL	631 [1393]	44 [98]	676 [1491]
	ALUMINUM	579 [1276]	44 [98]	623 [1374]
2.4L/45KW	STEEL	641 [1414]	44 [98]	686 [1512]
	ALUMINUM	588 [1297]	44 [98]	633 [1395]

NOTES:

1) MINIMUM RECOMMENDED CONCRETE PAD SIZE: 1155 (45.5") WIDE X 2255 (88.8") LONG. REFERENCE INSTALLATION GUIDE SUPPLIED WITH UNIT FOR CONCRETE PAD GUIDELINES.

2) ALLOW SUFFICIENT ROOM ON ALL SIDES OF THE GENERATOR FOR MAINTENANCE AND SERVICING. THIS UNIT MUST BE INSTALLED IN ACCORDANCE WITH CURRENT APPLICABLE NFPA 37 AND NFPA 70 STANDARDS AS WELL AS ANY OTHER FEDERAL, STATE AND LOCAL CODES FOR MINIMUM DISTANCES FROM OTHER STRUCTURES.

3) CIRCUIT BREAKER INFORMATION:
SEE SPECIFICATION SHEET WITHIN OWNERS MANUAL

4) INSIDE STUB-UP AREA FOR AC LOAD LEAD CONDUIT CONNECTION, NEUTRAL CONNECTION, BATTERY CHARGER 120 VOLT AC (.5 AMP MAX.) CONNECTION, AND ACCESS TO TRANSFER SWITCH CONTROL WIRES. REMOVE FRONT COVER FOR ACCESS.

4A) FIELD CUT HOLE IS ONLY REQUIRED FOR MOUNTING OF GENERATOR ON AN EXISTING PAD.

5) REFERENCE OWNERS MANUAL FOR LIFTING WARNINGS.

6) REMOVE EITHER LEFT OR RIGHT HAND SIDE PANEL TO ACCESS EXHAUST MUFFLER AND FAN BELT.

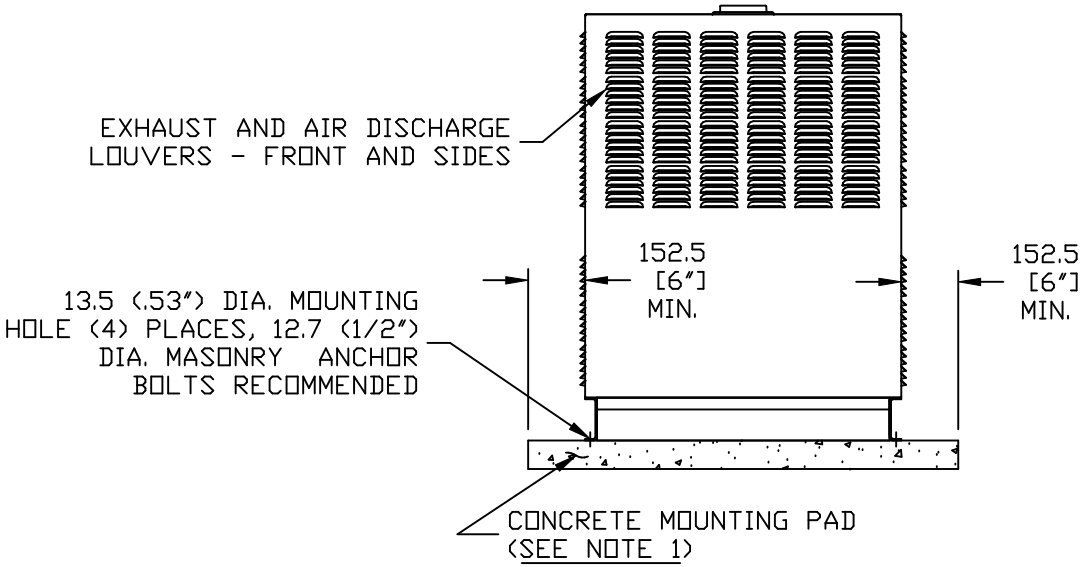

FRONT VIEW

EXPLODED VIEW:
INSTLTN DRAWING 2.4L 25 KW, 35KW & 45KW
DRAWING #: 0G0325

REVISION: H-6297-F
DATE: 3/31/10

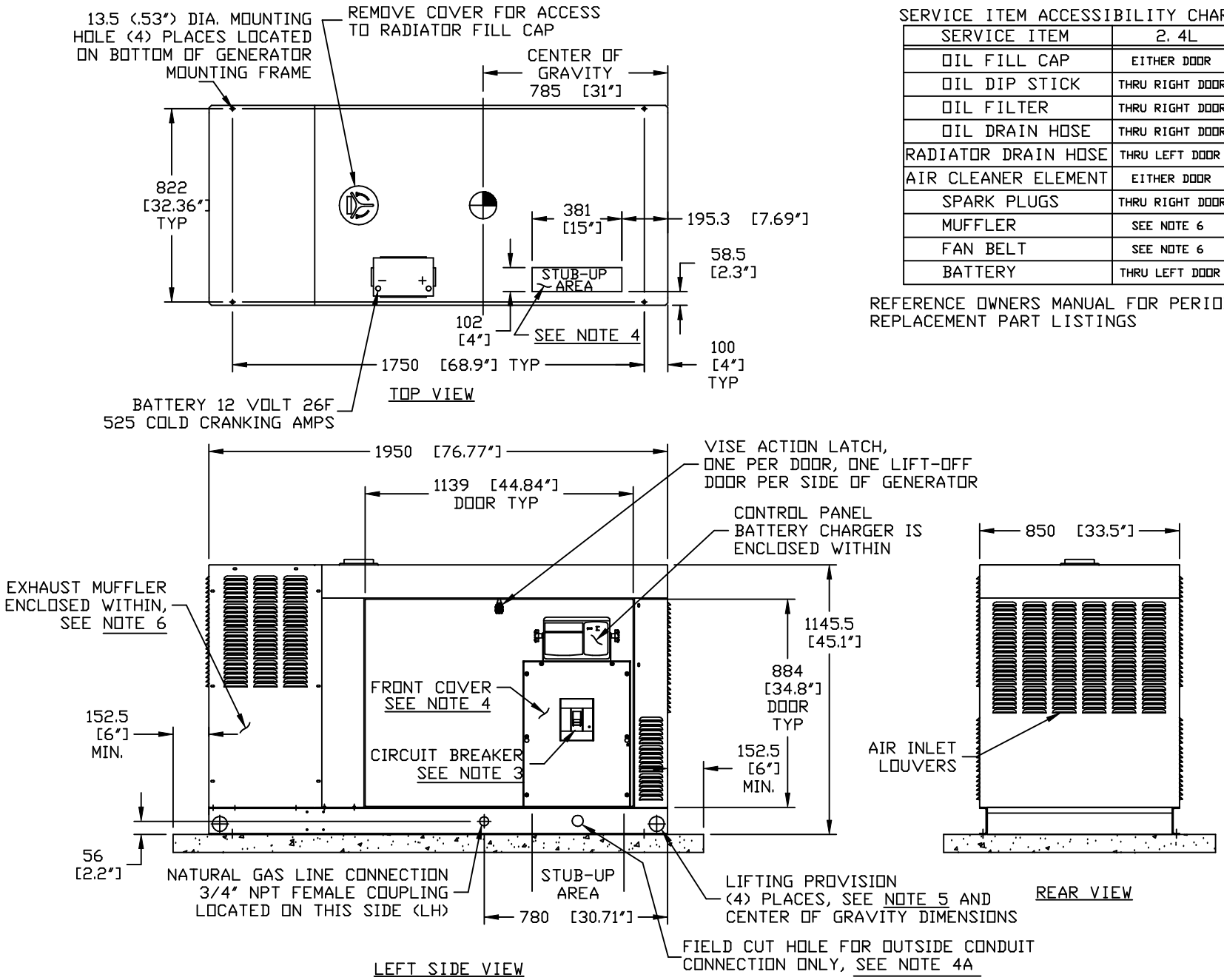

SERVICE ITEM ACCESSIBILITY CHART

SERVICE ITEM	2. 4L
OIL FILL CAP	EITHER DOOR
OIL DIP STICK	THRU RIGHT DOOR
OIL FILTER	THRU RIGHT DOOR
OIL DRAIN HOSE	THRU RIGHT DOOR
RADIATOR DRAIN HOSE	THRU LEFT DOOR
AIR CLEANER ELEMENT	EITHER DOOR
SPARK PLUGS	THRU RIGHT DOOR
MUFFLER	SEE NOTE 6
FAN BELT	SEE NOTE 6
BATTERY	THRU LEFT DOOR

REFERENCE OWNERS MANUAL FOR PERIODIC REPLACEMENT PART LISTINGS

EXPLODED VIEW:
INSTLTN DRAWING 2.4L 25 KW, 35KW & 45KW
DRAWING #: 0G0325