Serial Number

Industrial QT 2.4L 25kW Models

STANDBY GENERATOR

OWNER'S MANUAL

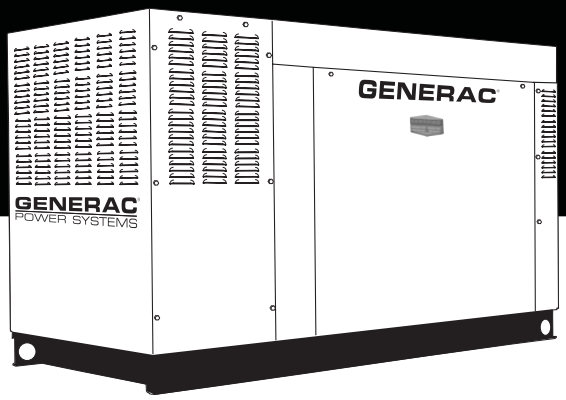

A new standard of reliability

GENERAC®
POWER SYSTEMS, INC.

This manual should remain with the unit.

Standby Generator Sets
Table of Contents

TABLE OF CONTENTS

INTRODUCTION

Thank you for purchasing this model of the Stationary Emergency Generator set product line.

Every effort was expended to make sure that the information and instructions in this manual were both accurate and current at the time the manual was written. However, the manufacturer reserves the right to change, alter or otherwise improve this product(s) at any time without prior notice.

◆ READ THIS MANUAL THOROUGHLY

If any portion of this manual is not understood, contact the nearest Authorized Service Dealer for starting, operating and servicing procedures.

Throughout this publication, and on tags and decals affixed to the generator, DANGER, WARNING, CAUTION and NOTE blocks are used to alert personnel to special instructions about a particular service or operation that may be hazardous if performed incorrectly or carelessly. Observe them carefully. Their definitions are as follows:

DANGER

After this heading, read instructions that, if not strictly complied with, will result in serious personal injury, including death, or property damage.

WARNING

After this heading, read instructions that, if not strictly complied with, may result in personal injury or property damage.

CAUTION

After this heading, read instructions that, if not strictly complied with, could result in damage to equipment and/or property.

NOTE:

After this heading, read explanatory statements that require special emphasis.

These safety warnings cannot eliminate the hazards that they indicate. Common sense and strict compliance with the special instructions while performing the service are essential to preventing accidents.

Four commonly used safety symbols accompany the DANGER, WARNING and CAUTION blocks. The type of information each indicates is as follows:

This symbol points out important safety information that, if not followed, could endanger personal safety and/or property of others.

This symbol points out potential explosion hazard.

This symbol points out potential fire hazard.

This symbol points out potential electrical shock hazard.

The operator is responsible for proper and safe use of the equipment. The manufacturer strongly recommends that the operator read this Owner's Manual and thoroughly understand all instructions before using this equipment. The manufacturer also strongly recommends instructing other users to properly start and operate the unit. This prepares them if they need to operate the equipment in an emergency.

◆ OPERATION AND MAINTENANCE

It is the operator's responsibility to perform all safety checks, to make sure that all maintenance for safe operation is performed promptly, and to have the equipment checked periodically by an Authorized Service Dealer. Normal maintenance service and replacement of parts are the responsibility of the owner/operator and, as such, are not considered defects in materials or workmanship within the terms of the warranty. Individual operating habits and usage contribute to the need for maintenance service.

Proper maintenance and care of the generator ensure a minimum number of problems and keep operating expenses at a minimum. See an Authorized Service Dealer for service aids and accessories.

Operating instructions presented in this manual assume that the generator electric system has been installed by an Authorized Service Dealer or other competent, qualified contractor. Installation of this equipment is not a “do-it-yourself” project.

◆ HOW TO OBTAIN SERVICE

When the generator requires servicing or repairs, simply contact an Authorized Service Dealer for assistance. Service technicians are factory-trained and are capable of handling all service needs.

When contacting a dealer about parts and service, always supply the complete Model Number, Serial Number and Type Code (where applicable) from the DATA LABEL that is affixed to the unit.

AUTHORIZED SERVICE DEALER LOCATION

To locate the nearest AUTHORIZED SERVICE DEALER, please call this number:

1-800-333-1322

or locate us on the web at:

www.generac.com

SAVE THESE INSTRUCTIONS – The manufacturer suggests that these rules for safe operation be copied and posted in potential hazard areas. Safety should be stressed to all operators, potential operators, and service and repair technicians for this equipment.

WARNING:

The engine exhaust from this product contains chemicals known to the state of California to cause cancer, birth defects or other reproductive harm.

WARNING:

This product contains or emits chemicals known to the state of California to cause cancer, birth defects or other reproductive harm.

Study these SAFETY RULES carefully before installing, operating or servicing this equipment. Become familiar with this Owner's Manual and with the unit. The generator can operate safely, efficiently and reliably only if it is properly installed, operated and maintained. Many accidents are caused by failing to follow simple and fundamental rules or precautions.

The manufacturer cannot anticipate every possible circumstance that might involve a hazard. The warnings in this manual, and on tags and decals affixed to the unit are, therefore, not all inclusive. If a procedure, work method or operating technique is used that the manufacturer does not specifically recommend, ensure that it is safe for others. Also make sure the procedure, work method or operating technique utilized does not render the generator unsafe.

DANGER

Despite the safe design of this generator, operating this equipment imprudently, neglecting its maintenance or being careless can cause possible injury or death. Permit only responsible and capable persons to install, operate or maintain this equipment.

Potentially lethal voltages are generated by these machines. Ensure all steps are taken to render the machine safe before attempting to work on the generator.

Parts of the generator are rotating and/or hot during operation. Exercise care near running generators.

GENERAL HAZARDS

- For safety reasons, the manufacturer recommends that this equipment be installed, serviced and repaired by an Authorized Service Dealer or other competent, qualified electrician or installation technician who is familiar with applicable codes, standards and regulations. The operator also must comply with all such codes, standards and regulations.
- Installation, operation, servicing and repair of this (and related) equipment must always comply with applicable codes, standards, laws and regulations. Adhere strictly to local, state and national electrical and building codes. Comply with regulations the Occupational Safety and Health Administration (OSHA) has established. Also, ensure that the generator is installed, operated and serviced in accordance with the manufacturer's instructions and recommendations. Following installation, do nothing that might render the unit unsafe or in noncompliance with the aforementioned codes, standards, laws and regulations.
- The engine exhaust fumes contain carbon monoxide gas, which can be DEADLY. This dangerous gas, if breathed in sufficient concentrations, can cause unconsciousness or even death. For that reason, adequate ventilation must be provided. This should be considered prior to installing the generator. The unit should be positioned to direct exhaust gasses safely away from any building where people, animals, etc., will not be harmed. Any exhaust stacks that ship loose with the unit must be installed properly per the manufacturer's instruction, and in strict compliance with applicable codes and standards.
- Keep hands, feet, clothing, etc., away from drive belts, fans, and other moving or hot parts. Never remove any drive belt or fan guard while the unit is operating.
- Adequate, unobstructed flow of cooling and ventilating air is critical in any room or building housing the generator to prevent buildup of explosive gases and to ensure correct generator operation. Do not alter the installation or permit even partial blockage of ventilation provisions, as this can seriously affect safe operation of the generator.
- Keep the area around the generator clean and uncluttered. Remove any materials that could become hazardous.
- When working on this equipment, remain alert at all times. Never work on the equipment when physically or mentally fatigued.
- Inspect the generator regularly, and promptly repair or replace all worn, damaged or defective parts using only factory-approved parts.
- Before performing any maintenance on the generator, disconnect its battery cables to prevent accidental start-up. Disconnect the cable from the battery post indicated by a NEGATIVE, NEG or (–) first. Reconnect that cable last.
- Never use the generator or any of its parts as a step. Stepping on the unit can stress and break parts, and may result in dangerous operating conditions from leaking exhaust gases, fuel leakage, oil leakage, etc.

⚠ ELECTRICAL HAZARDS ⚠

- All Stationary Emergency Generators covered by this manual produce dangerous electrical voltages and can cause fatal electrical shock. Utility power delivers extremely high and dangerous voltages to the transfer switch as well as the generator. Avoid contact with bare wires, terminals, connections, etc., on the generator as well as the transfer switch, if applicable. Ensure all appropriate covers, guards and barriers are in place before operating the generator. If work must be done around an operating unit, stand on an insulated, dry surface to reduce shock hazard.
- Do not handle any kind of electrical device while standing in water, while barefoot, or while hands or feet are wet. DANGEROUS ELECTRICAL SHOCK MAY RESULT.
- If personnel must stand on metal or concrete while installing, operating, servicing, adjusting or repairing this equipment, place insulative mats over a dry wooden platform. Work on the equipment only while standing on such insulative mats.
- The National Electrical Code (NEC) requires the frame and external electrically conductive parts of the generator to be connected to an approved earth ground. This grounding will help prevent dangerous electrical shock that might be caused by a ground fault condition in the generator or by static electricity. Never disconnect the ground wire.
- Wire gauge sizes of electrical wiring, cables and cord sets must be adequate to handle the maximum electrical current (ampacity) to which they will be subjected.
- Before installing or servicing this (and related) equipment, make sure that all power voltage supplies are positively turned off at their source. Failure to do so will result in hazardous and possibly fatal electrical shock.
- Connecting this unit to an electrical system normally supplied by an electric utility shall be by means of a transfer switch so as to isolate the generator electric system from the electric utility distribution system when the generator is operating. Failure to isolate the two electric system power sources from each other by such means will result in damage to the generator and may also result in injury or death to utility power workers due to backfeed of electrical energy.
- Stationary Emergency Generators installed with an automatic transfer switch will crank and start automatically when normal (utility) source voltage is removed or is below an acceptable preset level. To prevent such automatic start-up and possible injury to personnel, disable the generator's automatic start circuit (battery cables, etc.) before working on or around the unit. Then, place a "Do Not Operate" tag on the generator control panel and on the transfer switch.
- In case of accident caused by electric shock, immediately shut down the source of electrical power. If this is not possible, attempt to free the victim from the live conductor. AVOID DIRECT CONTACT WITH THE VICTIM. Use a nonconducting implement, such as a dry rope or board, to free the victim from the live conductor. If the victim is unconscious, apply first aid and get immediate medical help.
- Never wear jewelry when working on this equipment. Jewelry can conduct electricity resulting in electric shock, or may get caught in moving components causing injury.

FIRE HAZARDS

- Keep a fire extinguisher near the generator at all times. Do NOT use any carbon tetra-chloride type extinguisher. Its fumes are toxic, and the liquid can deteriorate wiring insulation. Keep the extinguisher properly charged and be familiar with its use. If there are any questions pertaining to fire extinguishers, consult the local fire department.

EXPLOSION HAZARDS

- Properly ventilate any room or building housing the generator to prevent build-up of explosive gas.
- Do not smoke around the generator. Wipe up any fuel or oil spills immediately. Ensure that no combustible materials are left in the generator compartment, or on or near the generator, as FIRE or EXPLOSION may result. Keep the area surrounding the generator clean and free from debris.
- These generators may operate using one of several types of fuels. All fuel types are potentially FLAMMABLE and/or EXPLOSIVE and should be handled with care. Comply with all laws regulating the storage and handling of fuels. Inspect the unit's fuel system frequently and correct any leaks immediately. Fuel supply lines must be properly installed, purged and leak tested according to applicable fuel-gas codes before placing this equipment into service.
- Diesel fuels are highly FLAMMABLE. Gaseous fluids such as natural gas and liquid propane (LP) gas are extremely EXPLOSIVE. Natural gas is lighter than air, and LP gas is heavier than air; install leak detectors accordingly.

IDENTIFICATION RECORD

◆ DATA LABEL

Every generator set has a DATA LABEL that contains important information pertinent to the generator. The data label, which can be found attached to the generator's lower connection box, lists the unit's serial number and its rated voltage, amps, wattage capacity, phase, frequency, rpm, power factor, production date, etc.

GENERATOR SET DATA — MADE IN USA

MODEL ____ SERIAL ____

RATED KW ____ RATED KVA ____ PHASE ____

RATED VOLTAGE ____ RATED AMPS ____

POWER FACTOR ____ HERTZ ____ ALT RPM ____

ENGINE RPM ____ PRODUCTION DATE ____

ALTERNATOR SUBTRANSIENT REACTANCE ____

ALTERNATOR TRANSIENT REACTANCE ____

CLASS ☐ ROTOR ☐ STATOR WINDING INSULATION AT 25°C AMBIENT

GENERAC POWER SYSTEMS, INC.
WAUKESHA, WI

NOTE:

For actual information related to this particular model, please refer to the Manual Drawing Listing located at the end of this manual, or to the data label affixed to the unit.

✦ Stationary Emergency Generator Model and Serial Number

This number is the key to numerous engineering and manufacturing details pertaining to your unit. Always supply this number when requesting service, ordering parts or seeking information.

✦ Identification Code

Use this code to obtain important information about the generator. For example, if the code is:

M	Q	T	1	0	0	5	4	A	N	S	N	A

M — Designates generators capable of paralleling. NOTE: Only 100kW and 150kW, 6.8L units are currently available for this configuration.
QT — Quiet Test Generator Series
100 — kw Rating
5.4 — Engine Size in Liters
A — Voltage Code: A = 120/240, Single-phase; G = 120/208, Three-phase; K = 277/480, Three-phase; J = 120/240, Three-phase; L = 346/600, Three-phase
N — Fuel: N = Natural Gas; V = Vapor Propane
S — Enclosure Material: A = Aluminum; S = Steel (Corrosion Resistant Aluminum Enclosure Material, Steel is Standard)
N — Emission Equipment: N = No Equipment; Y = Catalytic Converter and Air/Fuel Ratio Controller
A — Industrial Dealer Product

✦ Voltage Codes

The identification code letter following the unit's engine size is the generator's "voltage code."

✦ Groups and Assembly Numbers

The manual drawing listing lists the groups and corresponding assembly numbers for each unit. The assembly numbers refer to exploded view drawing numbers that are applicable to the specific generator model. These drawings are located in the back half of this manual.

EQUIPMENT DESCRIPTION

This equipment is a revolving field, alternating current Stationary Emergency Generator set. It is powered by a gaseous fueled engine operating at 1800 rpm for 4-pole direct drive units, 3600 rpm for 2-pole direct drive units and 2300 - 3000 rpm for quiet drive gear units. See the Specifications section for exact numbers. The unit comes complete with a sound attenuated enclosure, internally mounted muffler, control console, mainline circuit breaker, battery charger, and protective alarms as explained in the following paragraph.

All AC connections, including the power leads from the alternator, 120 volt battery charger input and control connections to the transfer switch are available in the main connection box.

The Stationary Emergency Generator incorporates the following generator features:

- Rotor and Stator insulation is Class F rated as defined by NEMA MG1-32.6, NEMA MG1-1.66. The generator is self ventilated and drip-proof constructed.
- The voltage waveform deviation, total harmonic content of the AC waveform and telephone influence factor have been evaluated and are acceptable according to NEMA MG1-32.

ENGINE OIL RECOMMENDATIONS

The unit has been filled with 15W-40 engine oil at the factory. Use a high-quality detergent oil classified "For Service SJ or SH." Detergent oils keep the engine cleaner and reduce carbon deposits. Use oil having the following SAE viscosity rating, based on the ambient temperature range anticipated before the next oil change:

Temperature	Oil Grade (Recommended)
Above 80° F (27° C)	SAE 30W or 15W-40
32° to 80° F (0° to 27° C)	SAE 20W-20 or 15W-40
Below 32° F (0° C)	See Note

CAUTION

Any attempt to crank or start the engine before it has been properly serviced with the recommended oil may result in an engine failure.

NOTE:

For temperatures below 32° F, it is strongly recommended to use the optional Cold Weather Start Kit (part number listed in the Specification Section). The oil grade for temperatures below 32° F is 5W-30 synthetic oil.

COOLANT RECOMMENDATIONS

Use a mixture of half low silicate ethylene glycol base anti-freeze and deionized water. Cooling system capacity is listed in the specifications. Use only deionized water and only low silicate anti-freeze. If desired, add a high quality rust inhibitor to the recommended coolant mixture. When adding coolant, always add the recommended 50-50 mixture.

CAUTION

Do not use any chromate base rust inhibitor with ethylene glycol base anti-freeze or chromium hydroxide ("green slime") forms and will cause overheating. Engines that have been operated with a chromate base rust inhibitor must be chemically cleaned before adding ethylene glycol base anti-freeze. Using any high silicate anti-freeze boosters or additives will also cause overheating. The manufacturer also recommends that any soluble oil inhibitor is NOT used for this equipment.

DANGER

Do not remove the radiator pressure cap while the engine is hot or serious burns from boiling liquid or steam could result.

Ethylene glycol base antifreeze is poisonous. Do not use mouth to siphon coolant from the radiator, recovery bottle or any container. Wash hands thoroughly after handling. Never store used antifreeze in an open container because animals are attracted to the smell and taste of antifreeze even though it is poisonous to them.

ENGINE PROTECTIVE DEVICES

The Stationary Emergency Generator may be required to operate for long periods of time without an operator on hand to monitor such engine conditions as coolant temperature, oil pressure or rpm. For that reason, the engine has several devices designed to protect it against potentially damaging conditions by automatically shutting down the unit when the oil pressure is too low, the coolant temperature is too high, the coolant level is too low, or the engine is running too fast.

NOTE:
Engine protective switches and sensors are mentioned here for the reader's convenience. Also refer to the applicable control panel manual for additional automatic engine shutdown information.

◆ COOLANT TEMPERATURE SENSING

An analog Water Temperature Sender (WTS) is located in the engine's cooling system. This sender is connected to the panel and allows the panel to monitor and display the temperature of the coolant system.

The WTS is a resistive device whose resistance changes based on coolant temperature. The resistance of the sender results in a voltage being developed across the sender. As the Coolant temperature increases, the resistance will decrease, causing the voltage to decrease. This changing voltage is converted to 4-20mA signal by a signal conditioner module. The corresponding 4-20mA signal is read by the control panel and displayed as the coolant temperature.

The control panel will monitor and display the coolant temperature anytime the DC input to the control panel is present.

If the temperature exceeds approximately 140° C (284° F), the engine shutdown will be initiated. The generator will automatically restart and the display will reset once the temperature has returned to an operating level.

◆ LOW COOLANT LEVEL

A Low Coolant Level (LCL) sensor is placed in the generators coolant system. This sensor allows the panel to detect a Low Coolant Level condition.

The LCL is a resistive device whose resistance changes rapidly based on the presence or absence of coolant.

The resistance of the LCL results in a voltage being developed across the LCL. This voltage changes as the resistance changes. This changing voltage is converted to 4-20mA signal by a signal conditioner module. The corresponding 4-20mA signal is read by the control panel and displayed as the low coolant level.

If the level of the engine coolant drops below the level of the low coolant level sensor, the engine shutdown will be initiated.

◆ OIL PRESSURE SENSING

An analog Oil Pressure Sender (OPS) is used for monitoring the engine oil pressure. This sender allows the control panel to measure and display the Engine oil pressure.

The OPS is a resistive device, whose resistance changes based on engine oil pressure. The resistance of the sender results in a voltage being developed across the sender. As the oil pressure increases, the resistance will decrease, causing the voltage to decrease. This changing voltage is converted to 4-20mA signal by a signal conditioner module. The corresponding 4-20mA signal is read by the control panel and displayed as the oil pressure.

The control panel will monitor and display oil pressure anytime the DC input to the control panel is present.

Should the oil pressure drop below the 8 psi range, the engine shutdown is initiated. The unit should not be restarted until oil is added. Turn the AUTO/OFF/MANUAL switch to the OFF position, then back to AUTO to restart.

◆ OVERCRANK SHUTDOWN

When the control panel receives a start signal, it initiates the programmed starting sequence. The start sequence consists of the number of crank attempts, the length of each crank attempt, and the rest time between each crank attempt. If the engine has not started by the end of the final crank attempt, an Overcrank alarm is generated, the control panel will sound the alarm and display the message "Failed to start".

◆ OVERSPEED SHUTDOWN

A speed circuit controls engine cranking, start-up, operation and shutdown. Engine speed signals are delivered to the circuit board whenever the unit is running. Should the engine over speed above a safe, preset value, the circuit board initiates an automatic engine shutdown. Contact the nearest Authorized Dealer if this failure occurs.

◆ RPM SENSOR LOSS SHUTDOWN

If the speed signal to the control panel is lost, engine shutdown will occur.

◆ DC FUSE

This fuse is located inside of the control panel. It protects the panel wiring and components from damaging overload. Always remove this fuse before commencing work on the generator. The unit will not start or crank if the fuse is blown. Replace the fuse with one of the same size, type, and rating. (See the exploded views and parts lists at the end of this manual for replacement part number.)

FUEL SYSTEM

◆ FUEL REQUIREMENTS

The Stationary Emergency Generator may be equipped with one of the following fuel systems:

- Natural gas fuel system
- Propane vapor (PV) fuel system
- Liquid propane (LP) fuel system

Recommended fuels should have a Btu content of at least 1,000 Btu's per cubic foot for natural gas; or at least 2,520 Btu's per cubic foot for LP gas. Ask the fuel supplier for the Btu content of the fuel.

Required fuel pressure for **natural gas is 5 inches to 14 inches water column (0.18 to 0.5 psi); and for liquid propane, 5 inches to 14 inches of water column (0.18 to 0.5 psi).**

NOTE:

Any piping used to connect the generator to the fuel supply should be of adequate size to ensure the fuel pressure NEVER drops below five inches water column for natural gas or 5 inches water column for propane vapor for all load ranges. The fuel supply piping shall be sized according to the installation manual using the fuel consumption requirements identified in the Specifications section of the Owner's Manual.

NOTE:

It is the responsibility of the installer to make sure that only the correct recommended fuel is supplied to the generator fuel system. Thereafter, the owner/operator must make certain that only the proper fuel is supplied.

◆ NATURAL GAS FUEL SYSTEM

Natural gas is supplied in its vapor state. In most cases, the gas distribution company provides piping from the main gas distribution line to the standby generator site. The following information applies to natural gas fuel systems.

- Gas pressure in a building is usually regulated by national, state and local codes.
- To reduce gas pressure to a safe level before the gas enters a building, a primary regulator is needed. The natural gas supplier may or may not supply such a regulator.
- It is the responsibility of the gas supplier to make sure sufficient gas pressure is available to operate the primary regulator.
- Gas pressure at the inlet to the fuel shutoff solenoid should not exceed approximately 14 inches water column (0.5 psi).

◆ PROPANE VAPOR WITHDRAWAL FUEL SYSTEM

This type of system utilizes the vapors formed above the liquid fuel in the supply tank. Approximately 10 to 20 percent of the tank capacity is needed for fuel expansion from the liquid to the vapor state. The vapor withdrawal system is generally best suited for smaller engines that require less fuel. The installer should be aware of the following:

- When ambient temperatures are low and engine fuel consumption is high, the vapor withdrawal system may not function efficiently.
- Ambient temperatures around the supply tank must be high enough to sustain adequate vaporization, or the system will not deliver the needed fuel volume.
- In addition to the cooling effects of ambient air, the vaporization process itself provides an additional cooling effect.

◆ LP LIQUID FUEL SYSTEM

LP is supplied as a liquid in pressure tanks. It is usually made up of propane, butane, or a mixture of the two gases. Propane tends to vaporize readily even at temperatures as low as -20° F (-29° C). However, butane reverts to its liquid state when temperatures drop below 32° F (0° C).

LP in a liquid withdrawal system must be converted to its gaseous state before it is introduced into the engine carburetor. A vaporizer-converter is generally used to accomplish this. In such a converter, heated engine coolant is ported through the converter to provide the necessary heat for conversion of the fuel from a liquid to a gaseous state.

SPECIFICATIONS

◆ STATIONARY EMERGENCY GENERATOR

Type.....Synchronous
Rotor Insulation.....Class F
Stator Insulation.....Class H
Total Harmonic Distortion.....<5%
Telephone Interference Factor (TIF) ..... < 50
Alternator Output Leads 3-phase.....6-wire
Bearings .....Sealed Ball
Coupling .....Flexible Disc
Load Capacity (Standby Rating) 25kW*

* NOTE: Generator rating and performance in accordance with ISO8528-5, BS5514, SAE J1349, ISO3046 and DIN 6271 Standards. KW rating is based on LPG fuel and may derate with natural gas.

Excitation System .....Direct

Generator Output Voltage/kW - 60 Hz	kW	Amp	CB Size
120/240V, 1-phase, 1.0 pf	25	104	125
120/208V, 3-phase, 0.8 pf	25	87	100
277/480V, 3-phase, 0.8 pf	25	38	40

Generator Locked Rotor KVA Available @ Voltage Dip of 35%
Single-phase..... 50 KVA
208V, 3-phase ..... 70 KVA
480V, 3-phase ..... 70 KVA

◆ ENGINE

Make .....Generac
Model .....In Line
Cylinders and Arrangement 4
Displacement.....2.4 Liter
Bore.....3.41 in.
Stroke.....3.94 in.
Compression Ratio..... 9.5-to-1
Air Intake System..... Naturally Aspirated
Valve Seats ..... Hardened
Lifter Type..... Hydraulic

Engine Parameters
Rated Synchronous RPM .....60 Hz, 1800
HP at rated kW.....60 Hz, 40

Exhaust System
Exhaust Flow at Rated Output 60 Hz.....130 cfm
Exhaust Temperature at Rated Output .....900° F

Combustion Air Requirements (Natural Gas)
Flow at rated power, 60 Hz.....70 cfm

Governor
Type.....Electronic
Frequency Regulation.....Isochronous
Steady State Regulation .....± 0.25%

Engine Lubrication System
Type of Oil Pump .....Gear
Oil Filter ..... Full Flow Spin-on, Cartridge
Crankcase Oil Capacity ..... 4 U.S. qts.

◆ COOLING SYSTEM

Type..... Pressurized Closed Recovery
Water Pump..... Belt Driven
Fan Speed.....1000 rpm
Fan Diameter.....22 inches
Fan Mode..... Puller
Air Flow (inlet air including alternator and combustion air) ..... 1600 ft^3/min.
Coolant Capacity..... (3.0 U.S. gal.)
Heat Rejection to Coolant.....106,900 Btu/h
Maximum Operating Air Temp. on Radiator..... 60° C (150° F)
Maximum Ambient Temperature ..... 50° C (140° F)

◆ FUEL SYSTEM

Type of Fuel .....Natural Gas, Propane Vapor
Carburetor..... Down Draft
Secondary Fuel Regulator..... Standard
Fuel Shut-off Solenoid..... Standard
Operating Fuel Pressure .....5 in. - 14 in. Water Column

Fuel Consumption - ft^3/hr (Natural Gas/LPV)

Exercise Cycle	*25% Load*	*50% Load*	*75% Load*	*100% Load*
42/16	107/41	204/77	293/111	375/142

◆ ELECTRICAL SYSTEM

Battery Charge Alternator .....12V, 30 Amp
Static Battery Charger .....12V, 10 Amp
Recommended Battery.....Group 26, 525CCA
System Voltage ..... 12 Volts

Voltage Regulator
Type.....Electronic
Sensing ..... Single-phase
Regulation.....± 1%
Features.....V/F Adjustable, Adjustable Voltage and Gain LED Indicators

Power Adjustment for Ambient Conditions
Temperature Deration
3% for every 10° C above °C 25
1.65% for every 10° above °F 77
Altitude Deration
1% for every 100 m above m.....183
3% for every 1000 ft. above ft. 600

Controller..... H-100

Figure 1 — Interconnections

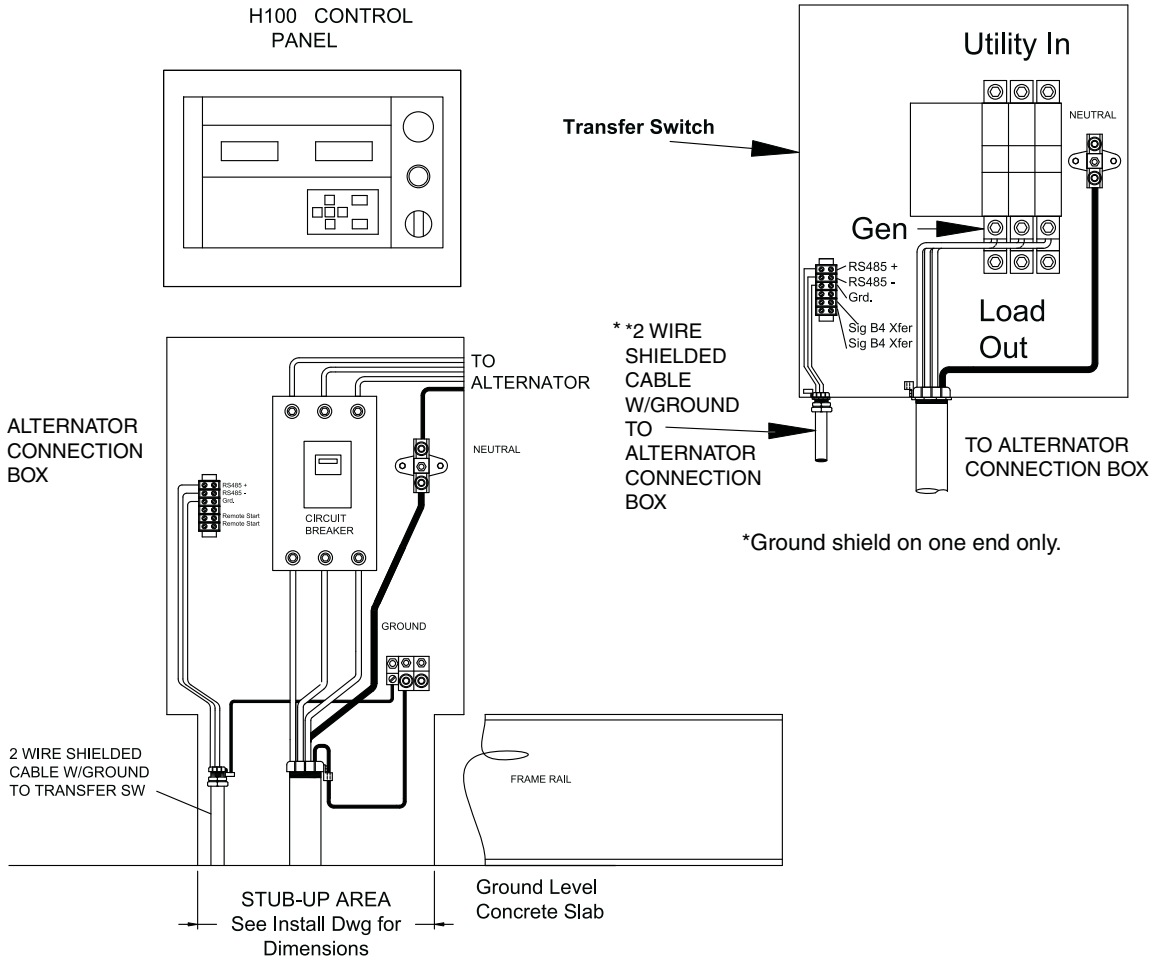

◆ COLD WEATHER KIT

For cold climates, optional cold weather kit (part number 0F6148) is recommended. The kit includes:

- Battery Warmer
- 4” Junction Box with hardware
- 6 qt. pack 5W-30 synthetic oil (engine)

RECONFIGURING THE FUEL SYSTEM

NOTE:

All models are configured to run on natural gas from the factory.

Before the generator can be operated using a LP fuel source, the fuel system, wire harness, and ignition control module must be reconfigured. The steps to reconfigure the generator from a natural gas (NG) to a liquidified petroleum (LP) fuel source are as follows:

◆ FUEL SYSTEM

1. Turn the main gas supply off and disconnect the battery. The battery may be reconnected after the wire harness has been reconfigured.
2. Remove the carburetor fuel hose from the outlet port of the demand regulator (see Figure 6.2).
3. Loosen the spring clamp on the start line hose and remove it from the brass hose fitting.
4. Remove the black pipe assembly from the outlet port of the demand regulator (Figure 6.2).
5. Remove the pipe plug.
6. Move NG jet from Port 2 to Port 1 and LP jet from Port 1 to Port 2.
7. Install the pipe plug. Apply pipe sealant compound to threads before installation.

NOTE:

The jet sizes are stamped on the individual jets. The larger jet size is used for running on NG.

8. Install the previously removed black pipe onto the outlet port of the demand regulator. Use pipe sealant on the pipe threads.
9. Reverse steps 1-3 in this procedure to reactivate the demand regulator.
10. Follow the instructions in the Wire Harness section.
11. Follow the instructions in the Ignition Control Modules section.

Figure 6.2 — Reconfigure the Fuel System

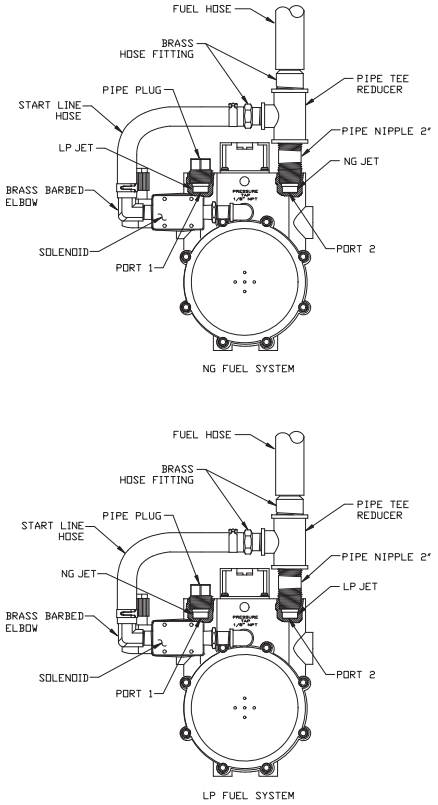

DANGER

⚠ **Serious injury or damage may occur if not configured properly. Please consult an Authorized Dealer with any questions.**

◆ WIRE HARNESS

A fuel select connector is located in the wire harness behind the control panel (Figure 6.3).

Engine timing for Natural Gas (NG) Fuel is selected when this connection is MADE (i.e. the two connector halves are plugged together).

Engine timing for LP Fuel is selected when this connection is LEFT OPEN. When this connector is left open, the plugs should be installed in these connectors to prevent moisture from entering the harness connectors.

CAUTION

⚠ **Whenever the Generator's Fuel Regulator is converted from one Fuel type to the other, make sure to configure the Fuel Select Connector for the correct Fuel type.**

Figure 6.3 — Fuel Select Connector

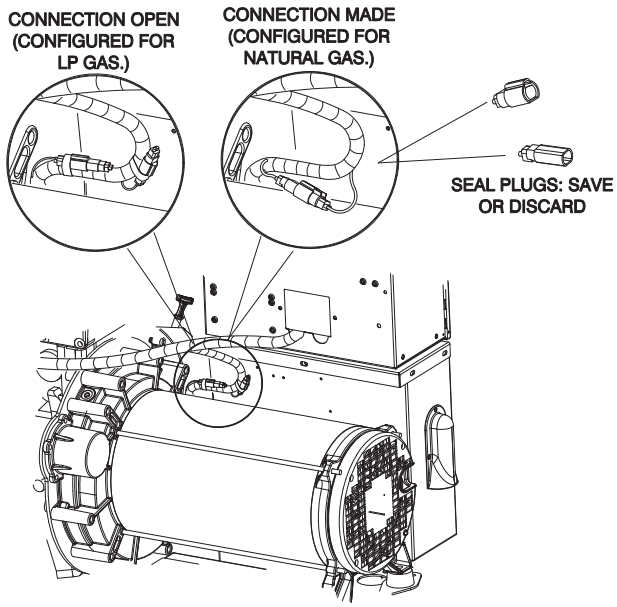

◆ IGNITION CONTROL MODULE

The ignition control module must be without power for at least one (1) minute before the new settings will take effect. If the battery hasn't already been disconnected, do so at this time for at least one (1) minute.

IGNITION DESCRIPTION

When this ignition is used on a 2.4L engine, a mag pick-up sensor and 164 tooth flywheel are used to determine engine timing. A CAM sensor establishes the location of flywheel tooth number one.

Nominal 2.4L Engine Timing versus Engine Speed:

RPM	LP Timing (BTDC)	NG Timing
1800 rpm	21 degrees	30 degrees

◆ IGNITION SHUTDOWN ON LOSS OF FLYWHEEL OR CAM/DISTRIBUTOR SIGNALS

The ignition will stop firing the coils immediately following the loss of the flywheel signal. The ignition will stop firing the coils approximately three (3) seconds following the loss of the cam signal.

◆ DIAGNOSTIC BLINK PATTERNS (IGNITION RED LED)

The diagnostic LED is located on the back of the ignition control module, near one of the module mounting bases. It will be necessary to remove the module from the panel, and turn over, to view the LED.

- Normal Operation: LED flashes at a 0.5 second ON and a 0.5 second OFF rate.

LED Fault Code with Priority as shown;

- No Crank Signal: LED blinks 2 times, is OFF for 3.0 seconds and then repeats
- No CAM Signal: LED blinks 3 times, is OFF for 3.0 seconds and then repeats

Only one fault is displayed at a time. If multiple faults exist then the highest priority fault must be resolved prior to a lower priority fault being displayed.

The diagnostic blink patterns provide flywheel and CAM sensor diagnostics only during cranking following the initial power-up of the ignition. The Generator must have been in the OFF mode for 60 seconds prior to cranking for the flywheel and CAM sensor diagnostics to be valid (i.e. diagnostics are not valid during a re-crank). The LED fault code blink pattern, if present, is displayed for 60 seconds and then the ignition will power itself down.

NOTE:

The ignition cover does not need to be removed to see the LED.

GENERATOR AC LEAD CONNECTIONS

See “Voltage Codes”. This Stationary Emergency Generator may be rated at any one of five voltages, either single-phase or three-phase. The electrical wires in the unit’s AC connection (lower) panel should be installed according to the number of leads and the voltage/phase required for the application. If there are any questions regarding lead connection, refer to the wiring diagrams at the back of this manual.

Voltage codes apply to the type of stator assembly installed on a particular generator.

ALTERNATOR POWER WINDING CONNECTIONS

◆ FOUR-LEAD, SINGLE-PHASE STATOR

Four-lead generators are built to supply electrical loads with voltage code "A" (240V, 1-phase, 60Hz). Electrical power is produced in the stator power windings. These windings were connected at the factory to the main circuit breaker as shown in Figure 7.1.

The rated voltage between each circuit breaker terminal is 240V. The rated voltage between each circuit breaker terminal and the neutral point 00 is 120V.

Figure 7.1 — Four-lead, Single-phase Stator

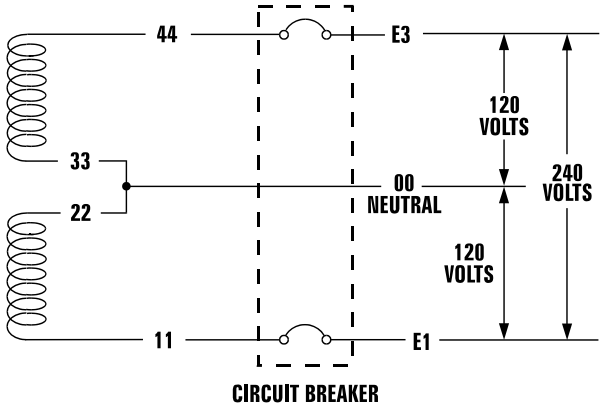

◆ 3-PHASE ALTERNATORS ("Y" CONFIGURATION)

The Stationary Emergency Generator is designed to supply 3-phase electrical loads. Electric power is produced in the alternator power windings. These windings were connected at the factory to the main circuit breaker with a “Y” configuration as shown in Figures 7.2, 7.3, and 7.4.

The rated voltage between circuit breaker terminals E1-E2, E1-E3 and E2-E3 is either 480V or 208V depending on the model.

The rated voltage between each circuit breaker terminal and the neutral point 00 is either 277V or 120V depending on the model.

Figure 7.2 — Stator Power Winding Connections - 3-phase, 120/208V (12 Lead)

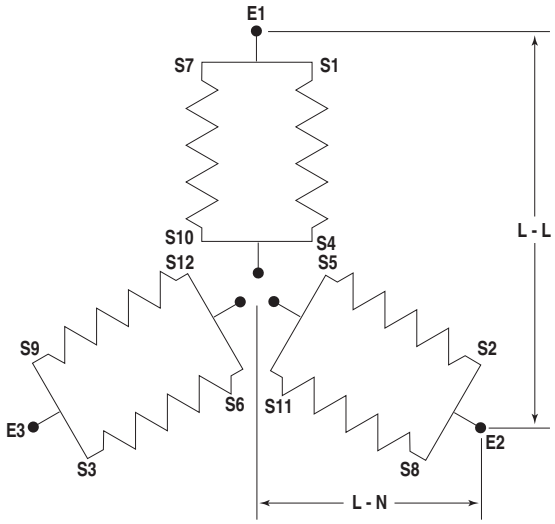

Figure 7.3 — Stator Power Winding Connections - 3-phase, 277/480V (12 Lead)

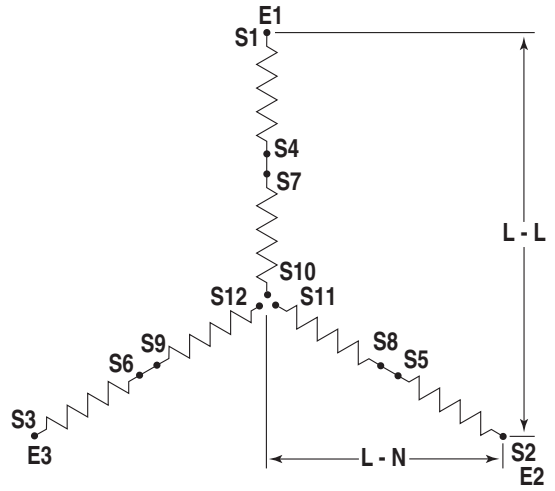

Figure 7.1 — Stator Power Winding Connections - 3-phase, 346/600V (6 Lead)

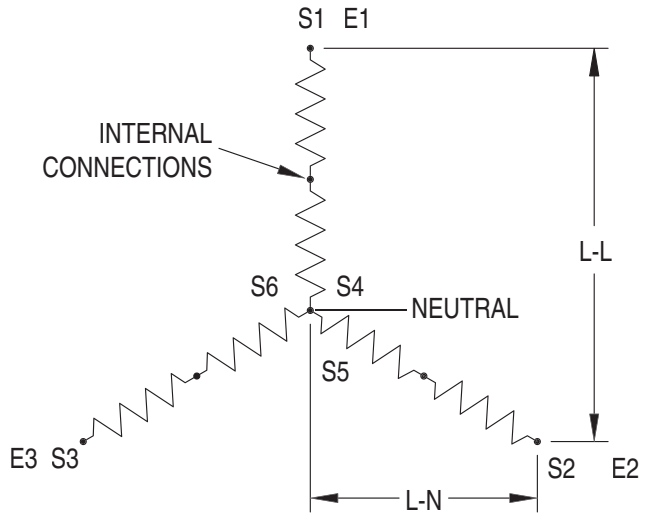

◆ 3-PHASE ALTERNATORS ("DELTA" CONFIGURATION)

The Stationary Emergency Generator is designed to supply 3-phase electrical loads. Electric power is produced in the alternator power windings. These windings were connected at the factory to the main circuit breaker with a “Delta” configuration as shown in Figures 7.5.

The rated voltage between circuit breaker terminals E1-E2, E1-E3 and E2-E3 is 208V.

The rated voltage between E1 or E3 and the neutral point 00 is 120V.

Figure 7.5 — Stator Power Winding Connections - 3-phase, 120/240V (12 Lead)

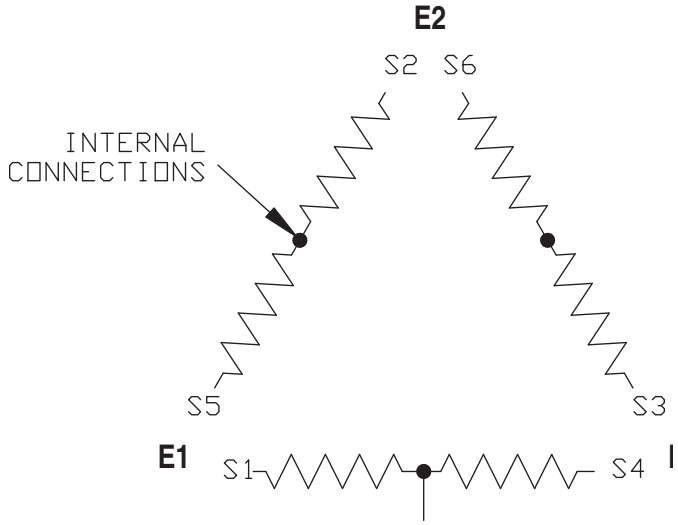

INSTALLATION

Refer to the separate "Installation Guide QT Product Line" supplied with the unit.

PREPARATION BEFORE START-UP

The instructions in this section assume that the Stationary Emergency Generator has been properly installed, serviced, tested, adjusted and otherwise prepared for use by a competent, qualified installation contractor. Be sure to read the "Safety Rules", as well as all other safety information in this manual, before attempting to operate this (and related) equipment.

Before starting the generator for the first time, the installer must complete the following procedures. For follow-up maintenance information and/or service intervals, please refer to the "Maintenance" section and the "Service Schedule".

◆ TRANSFER SWITCH

If this generator is used to supply power to any electrical system normally powered by an electric utility, the National Electrical Code requires that a transfer switch be installed. The transfer switch prevents electrical backfeed between two different electrical systems. (For additional information, see the applicable transfer switch manual for this unit.) The transfer switch, as well as the generator and other electrical components, must be properly located and mounted in strict compliance with applicable codes, standards and regulations.

◆ FUEL SYSTEM

Make sure the fuel supply system to the generator (a) delivers the correct fuel at the correct pressure and (b) is properly purged and leak tested according to code. No fuel leakage is permitted. See "Specifications" for more information.

◆ GENERATOR SET LUBRICATION

Check the engine crankcase oil level before operating and add oil to the proper level – the dipstick "FULL" mark. Never operate the engine with the oil level below the dipstick "ADD" mark. See "Specifications" and "Engine Oil Recommendations".

NOTE:

This engine is shipped from the manufacturer with "break-in" oil. This oil should be changed after 30 hours of operation.

Check the oil level in the generator gearbox (if so equipped) prior to initial use and at the intervals indicated by the "Service Schedule." The recommended oil is SAE 90 gear lubricant.

Also, if the engine is equipped with a mechanical governor, make sure the governor is properly lubricated with clean engine oil.

◆ PRIOR TO INITIAL START-UP

⚠ CAUTION ⚠

⚠ **Prior to initially starting the generator, it must be properly prepared for use. Any attempt to crank or start the engine before it has been properly serviced with the recommended types and quantities of engine fluids (oil, coolant, fuel, etc.) may result in an engine failure.**

◆ ENGINE COOLANT

Have the engine cooling system properly filled with the recommended coolant mixture. Check the system for leaks and other problems. See "Specifications" and "Coolant" sections.

◆ BELT TENSION

Check-the engine-fan belt tension and condition prior to placing the unit into service and at recommended intervals. Belt tension is correct when a force of approximately 22 pounds (10 kg), applied midway between pulleys, deflects the belt about 3/8- to 5/8-inch (10 to 16 mm).

◆ ELECTRICAL SYSTEM

Make sure the generator is properly connected to an approved earth ground.

Make sure the generator battery is fully charged, properly installed and interconnected, and ready for use.

NOTE:

Battery charger must be connected to 120 VAC, 15 amp circuit to operate.

Check to ensure that there are no loose electrical connections. Restrain any loose wires to keep them clear of any moving generator set components.

INITIAL INSPECTION FOR QT GENSET STARTUP

Inspect for the following.

- Freight Damage.
- Manuals present.
- Fluid Levels (Oil, coolant, battery, Gear Drive).
- Correct fuel piping.
- Correct muffler installation for external application.
- Adequate air flow, clearances and ventilation per installation drawings and applicable codes.
- Correct AC and DC wire size, connections and grounding. Control and communication wiring to/from the transfer switch must be run in a separate conduit from the AC power leads.

- **Battery charger connection to 120 VAC.**
- Communication wires connected between transfer switch and generator (HTS only).
- Unit secured to pad.

START-UP CHECKLIST

WARNING

Before working on the Stationary Emergency Generator, ensure the following:

- **The AUTO/OFF/MANUAL switch is in the OFF position.**
- **The 120VAC supply to the battery charger is switched OFF.**

◆ PREPARATION FOR START-UP

- Ensure that the 120VAC circuit breaker to the battery charger is open.
- Remove the fuse from the the control panel. For the H-100 and R-series: Open the front door of the control box and remove the 15 Amp ATO fuse in the lower left-hand corner of the control box.
- Connect the battery cables to the battery. Attach negative battery cable last.
- Close the 120VAC circuit breaker to the battery charger.
- Measure the voltage at the battery before and after the charger is turned on.
- Verify all AC electrical connections are tight at the circuit breaker and transfer switch.
- Visually inspect entire area looking for loose paper, plastic wrappings, leaves, etc.
- Check all hoses clamps fittings for leaks or damage.
- Check all electrical plugs throughout the generator. Ensure each plug is seated correctly and fully inserted into its receptacle.
- Verify the AUTO/OFF/MANUAL switch is in OFF position.
- Open the valve to the engine fuel line.
- Bleed the fuel system of air. (necessary for long fuel lines).
- Open the generator main line circuit breaker.
- Connect a manometer to the gas line and record the static pressure. It must be as listed in the Specifications.
- Insert the fuse into the control panel.
- Move the AUTO/OFF/MANUAL switch to the MANUAL position. The engine should now crank and start.
- Check voltage at the generator terminals.
- For 3-phase units, check phase rotation at the transfer switch terminals. The generator phase rotation must match the utility phase rotation.
- Check for coolant, fuel, oil, and exhaust leaks.
- Close the generators main line circuit breaker.
- Turn the generator set off.
- Connect the UTILITY supply to the transfer switch.
- Set the AUTO/OFF/MANUAL switch to AUTO.
- Disconnect utility power before the transfer switch.

  Engine should start, transfer to load.

  Run at least 15 minutes on generator power. Make certain all 3-phase loads are functioning correctly (correct phase rotation).
- Reconnect Utility power

  Transfer switch will transfer back to Utility and engine will shut down within the given time parameters set up for the specific transfer switch and controller.
- Install all covers, access plates and door panels.
- Put the Owners Manual in a safe and accessible place.
- Make certain the AUTO/OFF/MANUAL switch is in the AUTO position.

◆ START-UP INSPECTION

When a start-up is performed by an Authorized Service Dealer, a standard three-part form titled “Start-up Inspection for Standby Power Systems” (part no. 067377), should be completed by the installation technician or engineer. See page 1-3 for information on locating the nearest Authorized Service Dealer. The installer should complete the form and disseminate copies as follows:

- White copy: Mail to Generac Warranty Department, P.O. Box 340, 211 Murphy Dr., Eagle, WI 53119-2062.
- Pink Copy: For service file of installing dealer.
- Yellow Copy: For the customer’s records.

STATIONARY EMERGENCY GENERATOR CONTROL AND OPERATION

Refer to the appropriate control panel operator's manual for this unit.

OPERATING UNIT WITH MANUAL TRANSFER SWITCH

If the Stationary Emergency Generator was installed in conjunction with a transfer switch capable of manual operation only, the following procedure applies. A manually operated transfer switch is one that will not provide automatic start-up and does not include an intelligence circuit.

◆ ENGINE START-UP AND TRANSFER

For additional information, refer to the applicable control panel manual for this unit, as well as any literature pertaining to the specific transfer switch.

DANGER

The Maintenance Disconnect Switch and the AUTO/OFF/MANUAL switches (if so equipped) must be set properly, or the generator will crank and start as soon as the utility power to the transfer switch is turned off. Refer to applicable control panel and transfer switch manuals for more information.

Do not proceed until certain that utility source voltage is available to the transfer switch and the transfer switch main contacts are set to UTILITY.

Do not attempt manual operation until all power supplies to the transfer switch have been positively turned off, or extremely dangerous - possibly lethal - electrical shock will result.

Transfer switch enclosure doors should be kept closed and locked. Only authorized personnel should be allowed access to the transfer switch interior. Extremely high and dangerous voltages are present in the transfer switch.

In order to transfer load from the utility source to the generator, follow these directions:

- Turn OFF or disconnect the utility power circuit to the transfer switch, using the means provided (such as the utility source main line circuit breaker).
- Set the transfer handle to its UTILITY (NORMAL) position with load circuits connected to the utility power supply.
- Set the generator's main line circuit breaker to its OFF (or OPEN) position.
- Start the generator.

CAUTION

Do not crank the engine continuously for longer than 30 seconds, or the heat may damage the starter motor.

- Let engine stabilize and warm up.
- Check all applicable instrument and gauge readings. When certain that all readings are correct, move the transfer switch manual handle to the STANDBY (or EMERGENCY STANDBY) position, i.e., load circuits supplied by the generator.
- Set the generator's main line circuit breaker to its ON (or CLOSED) position.
- Load circuits are now powered by the generator.

◆ RETRANSFER AND SHUTDOWN

For additional information, refer to the applicable control panel manual for this unit, as well as any literature pertaining to the specific transfer switch.

To transfer the load back to the utility power source and shut down the generator, follow these directions:

- Set the generator's main line circuit breaker to its OFF (or OPEN) position.
- Manually move the transfer switch handle to its UTILITY (NORMAL) position, i.e., load circuits connected to the utility.
- Turn ON the utility power supply to the transfer switch, using the means provided (such as the utility power source main line circuit breaker).
- Let the generator run at no-load for a few minutes to stabilize internal temperatures.
- Shut down the generator.

OPERATING UNIT WITH AUTOMATIC TRANSFER SWITCH

If the Stationary Emergency Generator has been installed with an automatic transfer switch, the engine may be started and stopped automatically or manually.

NOTE:

Refer to the applicable manual for your transfer switch and to "Transfer Switch Start Signal Connections". In addition, please note the dangers under "Engine Start-up and Transfer."

MAINTENANCE PERFORMED BY SERVICE DEALERS/CONTRACTORS

WARNING

Before working on the Stationary Emergency Generator, ensure the following:

- **The AUTO/OFF/MANUAL switch is in the OFF position.**
- **The 15A fuse has been removed from the control box.**
- **The 120VAC supply to the battery charger is switched OFF.**

◆ EVERY THREE MONTHS

1. Check battery condition.
2. Inspect and test fuel system.
3. Check transfer switch.
4. Inspect exhaust system.
5. Check engine ignition system.
6. Check fan belts.

◆ ONCE EVERY SIX MONTHS

1. Test Engine Safety Devices (low oil pressure, low coolant level, high coolant temperature).

◆ ONCE ANNUALLY

1. Test engine governor; adjust or repair, if needed.
2. Clean, inspect generator.
3. Flush cooling system.
4. Clean/re-gap spark plugs or replace as necessary.

◆ FIRST 30 OPERATING HOURS

1. Change engine "break-in" oil and filter.

◆ FIRST 100 OPERATING HOURS

1. Change engine oil and oil filter. After initial change, service engine oil and filter at 100 operating hours or six months, whichever comes first.
2. Retorque intake and exhaust manifold.

◆ EVERY 500 OPERATING HOURS

1. Service air cleaner.
2. Check starter.
3. Check engine DC alternator.

COOLING SYSTEM

Air intake and outlet openings in the generator compartment must be open and unobstructed for continued proper operation. This includes such obstructions as high grass, weeds, brush, leaves and snow.

Without sufficient cooling and ventilating air flow, the engine/generator quickly overheats, which causes it to shut down. (See the installation diagram.)

WARNING

The exhaust system parts from this product get extremely hot and remains hot after shutdown. High grass, weeds, brush, leaves, etc. must remain clear of the exhaust. Such materials may ignite and burn from the heat of the exhaust system.

OVERLOAD PROTECTION FOR ENGINE DC ELECTRICAL SYSTEM

Engine cranking, start up and running are controlled by a solid state Engine Controller circuit board. Battery voltage is delivered to that circuit board via a 15 amp fuse. These overcurrent protection devices will open if the circuit is overloaded.

CAUTION

If a circuit breaker opens or a fuse element melts, find the cause of the overload before resetting the circuit breaker or replacing the fuse.

CHECKING FLUID LEVELS

◆ CHECK ENGINE OIL

Check engine crankcase oil level (Figure 10.1) at least every 20 hours of operation, or prior to use.

Figure 10.1 - Oil Dipstick and Oil Fill Cap

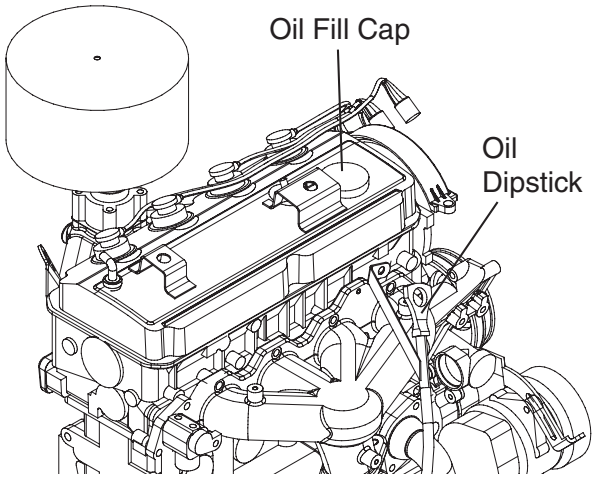

- Remove oil dipstick and wipe dry with a clean, lint-free cloth.
- Install oil dipstick, then remove again.
- Oil should be between FULL and ADD marks.
- If oil level is below the dipstick ADD mark, remove oil fill cap-. Add the recommended oil to bring oil level up to the FULL mark. DO NOT FILL ABOVE THE “FULL” MARK. See “Engine Oil Recommen-dations” for recommended oils.

◆ BATTERY FLUID

Check battery electrolyte fluid based on the Maintenance Schedule. Fluid should cover separators in all battery cells. If fluid level is low, add distilled water to cover tops of separators. DO NOT USE TAP WATER IN BATTERY.

◆ ENGINE COOLANT

Check coolant level in coolant recovery bottle. See Specifications.

- Add recommended coolant mixture as necessary.
- Periodically remove radiator pressure cap (only when engine has cooled down) to make sure the coolant recovery system is functioning properly. Coolant should be at bottom of radiator filler neck. If coolant level is low, inspect gasket in radiator pressure cap. Replace cap, if necessary. To have pressure cap tested, contact a Service Dealer. Inspect cooling system and coolant recovery system for leaks.

MAINTENANCE OWNER/ OPERATOR CAN PERFORM

WARNING

Before working on the generator, ensure the following:

- **The AUTO/OFF/MANUAL switch is in the OFF position.**
- **The 15A fuse has been removed from the control box.**
- **The 120VAC supply to the battery charger is switched OFF.**

◆ CHECK ENGINE OIL LEVEL

Refer to “Checking Fluid Levels”.

◆ CHECK BATTERY

- See “Checking Fluid Levels”.
- Check battery cables for condition, tightness, corrosion or damage. Clean, tighten or replace as necessary.

◆ EXERCISE SYSTEM

Start the Stationary Emergency Generator engine at least once every seven days and let it run at least 20 minutes. For more detailed exercise information, see the respective sections in the Control Panel Technical Manual that is supplied with the unit.

◆ INSPECT COOLING SYSTEM

- Inspect engine cooling system. See “Maintenance Schedule”.
- Check hoses for damage, deterioration, leaks, etc. Correct any discrepancies found.
- Check hose clamps for tightness.

◆ CHECK ENGINE COOLANT LEVEL

See “Checking Fluid Levels”.

◆ PERFORM VISUAL INSPECTION

Complete a thorough visual inspection of the entire engine-generator monthly. Look for obvious damage, loose, missing or corroded nuts, bolts and other fasteners. Look for fuel, oil or coolant leaks.

◆ INSPECT EXHAUST SYSTEM

Inspect the exhaust system at least once every three months. Check all exhaust system pipes, mufflers, clamps, etc. for condition, tightness, leaks, security, damage.

◆ CHECK FAN BELT

- Inspect fan belts every three months. Replace any damaged, deteriorated, worn or otherwise defective belt.
- Check fan belt tension. Thumb pressure, exerted midway between pulleys, should deflect about 3/8 to 5/8 of an inch. Adjust belt tension as required.
- Check fan belt alignment.

◆ INSPECT ENGINE GOVERNOR

Visually inspect electronic governor.

DANGER

Do not attempt to adjust the governor. Only qualified service facilities should adjust the governor. Excessively high operating speeds are dangerous and increase the risk of personal injury. Low speeds impose a heavy load on the engine when adequate engine power is not available and may shorten engine life. Correct rated frequency and voltage are supplied only at the proper governed speed. Some connected electrical load devices may be damaged by incorrect frequency and/ or voltage. Only qualified service technicians should adjust the governed speed.

◆ CHANGING ENGINE OIL

CAUTION

Hot oil may cause burns. Allow engine to cool before draining oil. Avoid prolonged or repeated skin exposure with used oil. Thoroughly wash exposed areas with soap.

Refer to maintenance performed by service facilities for engine oil and filter change frequencies.

Drain the oil while the engine is still warm from running. This means warm up the engine, shut it down and drain immediately as follows:

1. Remove OIL DRAIN HOSE from its retaining clip.
2. Loosen and remove OIL DRAIN HOSE CAP. Drain oil completely into suitable container.
3. When all oil has drained, install and tighten OIL DRAIN HOSE CAP, and re-install into its retaining clip.
4. Turn OIL FILTER (Figure 10.2) counterclockwise and remove. Properly dispose of old filter.

Figure 10.2 – Oil Filter

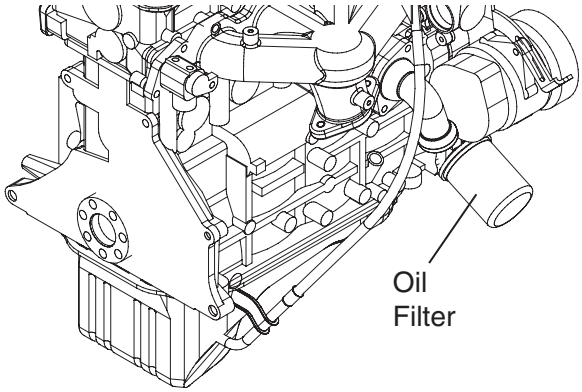

5. Apply light coating of new engine oil to seal of new oil filter.-Install FILTER and tighten by hand only. DO NOT OVER TIGHTEN.
6. Remove OIL FILL CAP and add recommended oil. Crankcase oil capacity is listed in the "Specifications" section.

CAUTION

After refilling the crankcase with oil, always check oil level on dipstick. NEVER OPERATE ENGINE WITH OIL BELOW THE DIPSTICK "ADD" MARK.

7. Start engine and check for oil leaks.
8. Shut OFF engine and wait 10 minutes for the oil to settle down into the oil pan. Recheck oil level on dipstick. DO NOT fill above the dipstick "FULL" mark.
9. Dispose of used oil at a proper collection center.

◆ CHANGING THE ENGINE AIR CLEANER

To replace the engine air cleaner, remove the air cleaner cover and replace the air filter making sure it is positioned properly before reattaching the cover (Figure 10.3).

Figure 10.3 – Engine Air Cleaner

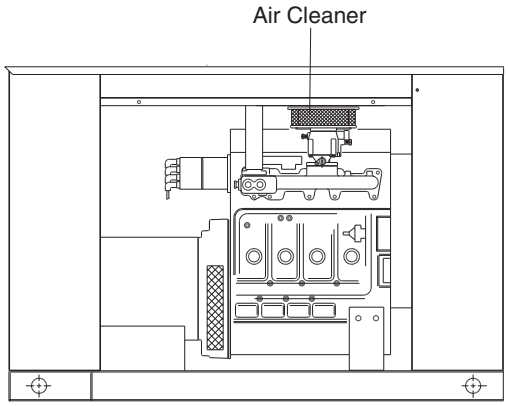

(Doors Removed for Clarity)

See the "Service Schedule," for air cleaner maintenance.

◆ SPARK PLUGS

Reset the spark plug gap or replace the spark plugs as necessary (Figure 10.4).

1. Clean the area around the base of the spark plugs to keep dirt and debris out of the engine. Clean by scraping or washing using a wire brush and commercial solvent. Do not blast the spark plugs to clean.
2. Remove the spark plugs and check the condition. Replace the spark plugs if worn or if reuse is questionable. See the "Service Schedule" section for recommended inspection.
3. Check the spark plug gap using a wire feeler gauge. Adjust the gap to 1.07-1.17 mm (0.042-0.046 inch) by carefully bending the ground electrode (Figure 10.4).

Figure 10.4 – Setting the Spark Plug Gap

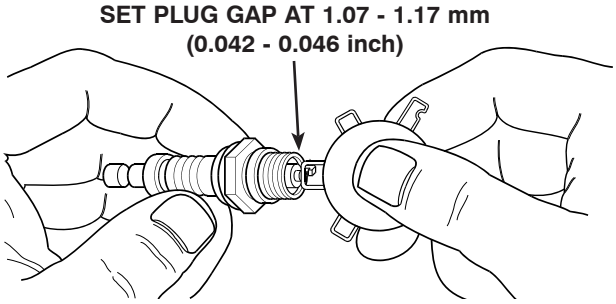

◆ COOLANT CHANGE

Every year, have a service facility drain, flush and refill the cooling system. See "Specifications" for cooling system recommendations.

MISCELLANEOUS MAINTENANCE

◆ CLEANING THE STATIONARY EMERGENCY GENERATOR

Keep the generator as clean and as dry as possible. Dirt and moisture that accumulates on internal generator windings have an adverse effect on insulation resistance.

Periodically clean generator exterior surfaces. A soft brush may be used to loosen caked on dirt. Use a vacuum system or dry, low pressure air to remove any accumulations of dirt. The generator is housed inside an all-weather enclosure, clean the enclosure with a soft, damp cloth or sponge and water.

Once each year have the generator cleaned and inspected by a Service Dealer. That dealer will use dry, low pressure air to clean internal windings. Parts inside the control console should be cleaned and inspected at this time as well.

Finally, have the insulation resistance of stator and rotor windings checked. If insulation resistances are excessively low, the generator may require drying.

◆ BATTERY

All lead-acid storage batteries discharge when not in use. Refer to specific instructions and warnings that accompany the battery. If such information is not available, observe the following precautions when handling a battery:

- DO NOT use jumper cables and a booster battery to crank or start the generator engine.
- DO NOT recharge a weak battery while it is installed in the generator. Remove battery from generator and recharge in a well-ventilated area, away from fuel vapors, sparks, heat or flames.
- Battery electrolyte fluid is an extremely caustic sulfuric solution that can cause severe burns. DO NOT permit fluid to contact eyes, skin, clothing, painted surfaces, wiring insulation, etc. If any battery fluid is spilled, flush the affected area with clear water immediately.
- Always wear safety glasses, rubber apron and gloves when handling a battery.
- Batteries give off explosive hydrogen gas while charging. The gas can form an explosive mixture around the battery for several hours after charging. Any spark, heat or flames can ignite the gas and cause an explosion which can shatter the battery, causing blindness or other serious injury.

◆ BATTERY MAINTENANCE

The battery should be inspected per the "Scheduled Maintenance" section. The following procedure should be followed for inspection:

1. Inspect the battery posts and cables for tightness and corrosion. Tighten and clean as necessary.
2. Check the battery fluid level of unsealed batteries and, if necessary, fill with DISTILLED WATER ONLY. DO NOT USE TAP WATER IN BATTERIES.
3. Have the state of charge and condition checked. This should be done with an automotive-type battery hydrometer.

DANGER

Storage batteries give off explosive hydrogen gas. This gas can form an explosive mixture around the battery for several hours after charging. The slightest spark can ignite the gas and cause an explosion. Such an explosion can shatter the battery and cause blindness or other injury. Any area that houses a storage battery must be properly ventilated. Do not allow smoking, open flame, sparks or any spark producing tools or equipment near the battery.

Battery electrolyte fluid is an extremely corrosive sulfuric acid solution that can cause severe burns. Do not permit fluid to contact eyes, skin, clothing, painted surfaces, etc. Wear protective goggles, protective clothing and gloves when handling a battery. If fluid is spilled, flush the affected area immediately with clear water.

Do not use any jumper cables or booster battery to crank and start the generator engine. If the battery has completely discharged, remove it from the generator for recharging.

WARNING

Be sure the AUTO/OFF/MANUAL switch is set to the OFF position, before connecting the battery cables. If the switch is set to AUTO or MANUAL, the generator can crank and start as soon as the battery cables are connected.

Be sure the 120VAC power supply to the battery is turned OFF, or sparking may occur at the battery posts as the cables are attached and cause an explosion.

◆ BATTERY REPLACEMENT

NOTE:

Unit DOES NOT include battery.

When supplying or replacing the battery, the recommended number and type of battery is listed in the Specifications Section.

NOTE:

The BCI number should be located directly on the battery.

SERVICE SCHEDULE

22 KW - 150 KW GASEOUS STATIONARY EMERGENCY GENERATOR

The following is a recommended maintenance schedule for Gaseous Stationary Emergency Generator sets from 22kW to 150 kW in size. The established intervals in the schedule are the maximum recommended when the unit is used in an average service application. They will need to be decreased (performed more frequently) if the unit is used in a severe application. Use calendar time, from the previous maintenance interval to determine the next required maintenance interval.

Service Maintenance Interval Information:

The various service maintenance intervals are designated by interval numbers as follows:

1 An early inspection of the generator set to insure it is ready to operate when required and to identify any potential problem areas.

CAUTION

This inspection may be performed by the end user providing the following safety steps are taken to prevent the engine from starting automatically without warning:

To prevent injury, perform the following steps in the order indicated before starting any maintenance:

- **Disable the generator set from starting and/or connecting to the load by setting the control panel Auto/Off/ Manual switch to the "OFF" position.**
- **Remove the 15 amp control panel fuse.**
- **Turn off the battery charger.***
- **Remove the negative battery cable.**

CAUTION

*** *The battery charger must be turned off BEFORE removing the battery cable to prevent an over current condition from burning out sensitive control panel components and circuits*.**

Following all maintenance, reverse these steps to insure the unit is returned to standby setup for normal operation when required.

2 A wear-in service inspection of the generator set to insure it is ready to operate and carry the load when required, and to identify any potential problem areas.

*Performed **ONLY ONCE** following the first three months or the first 30 hours of operation after purchase of the unit.*

This inspection contains some maintenance tasks which require special tools, equipment, and/or knowledge to accomplish and should be performed only by a Service Dealer.

3 An operational inspection of the generator set to insure it is ready to operate and carry the load when required, and to identify any potential problem areas.

Performed semi-annually or following each 50 hours of operation of the unit.

This inspection contains some maintenance tasks which require special tools, equipment, and/or knowledge to accomplish and should be performed only by a Service Dealer.

4 A mid-level inspection of the generator set to insure it is ready to operate and carry the load when required, and to identify any potential problem areas.

Performed annually or following each 100 hours of operation of the unit.

This inspection contains some maintenance tasks which require special tools, equipment, and/or knowledge to accomplish and should be performed only by a Service Dealer.

5 A comprehensive inspection of the generator set to insure it is properly serviced and ready to operate and carry the load when required, and to identify any potential problem areas.

Performed annually or following each 250 hours of operation of the unit.

This inspection contains some maintenance tasks which require special tools, equipment, and/or knowledge to accomplish and should be performed only by a Service Dealer.

Stationary Emergency Generator
Service Schedule

Maintenance Tasks	Level 1 Recom-mended to be done monthly/ 10 hrs.	Task Comp. (Date-Initials)	Level 2 Required to be done 3 months/ Break-in 30 hrs.	Task Comp. (Date-Initials)	Level 3 Required to be done Semi-annually/ 50 hrs.	Task Comp. (Date-Initials)	Level 4 Required to be done Annually/ 100 hrs.	Task Comp. (Date-Initials)	Level 5 Required to be done Bi-annually/ 250 hrs.	Task Comp. (Date-Initials)
1. Disable the unit from operating per the first page warning.	●		●		●		●		●	
2. Check the engine oil level. Adjust as necessary.	●		●		●		●		●	
3. Check the engine coolant level. Adjust as necessary.	●		●		●		●		●	
4. Check the engine coolant thermal protection level. Correct as necessary.							●		●	
5. Check the natural gas delivery system for leaks and correct pressure on gas engine driven units. Tighten connections as necessary.	●		●		●		●		●	
6. Check the air inlets and outlets of the enclosure and radiator for debris. Clean as necessary.	●		●		●		●		●	
7. Check the battery electrolyte level and specific gravity if accessible. Adjust as necessary.	●		●		●		●		●	
8. Check the battery posts, cables, and charger for loose connections corrosion, and proper operation. Correct as necessary.	●		●		●		●		●	
9. Check the unit wiring for loose connections, corrosion, and damage. Correct as necessary.	●		●		●		●		●	

Maintenance Tasks	Level 1 Recom-mended to be done monthly/ 10 hrs.	Task Comp. (Date-Initials)	Level 2 Required to be done 3 months/ Break-in 30 hrs.	Task Comp. (Date-Initials)	Level 3 Required to be done Semi-annually/ 50 hrs.	Task Comp. (Date-Initials)	Level 4 Required to be done Annually/ 100 hrs.	Task Comp. (Date-Initials)	Level5 Required to be done Bi-annually/ 250 hrs.	Task Comp. (Date-Initials)
10. Check the engine accessory drive belts and fan coupling device if equipped for correct tension, wear, weather cracking, and damage. Replace as necessary.			●				●		●	
11. Check the engine valve clearance/ lash. Adjust as necessary.**							●		●	
12. Visually inspect the unit looking for leaks, wear or damage, loose connections or components, and corrosion. Correct as necessary.							●		●	
13. Test the engine and transfer switch safety devices. Correct and/or adjust as necessary.	●		●		●		●		●	
14. Initiate an automatic start and transfer of the unit to site load and exercise it for at least 1 hour looking for leaks, loose connections or components, and abnormal operating conditions. Correct as necessary.							●		●	
15. Replace the engine accessory drive belts.									●	
16. Check gearbox oil level (if equipped).	●		●		●		●		●	
17. Change gearbox oil (if equipped).									●	

** Not required for engines equipped with hydraulic lifters. See the "Specification" section for lifter type.

Maintenance Tasks	Level 1 Recom-mended to be done monthly/ 10 hrs.	Task Comp. (Date-Initials)	Level 2 Required to be done 3 months/ Break-in 30 hrs.	Task Comp. (Date-Initials)	Level 3 Required to be done Semi-annually/ 50 hrs.	Task Comp. (Date-Initials)	Level 4 Required to be done Annually/ 100 hrs.	Task Comp. (Date-Initials)	Level5 Required to be done Bi-annually/ 250 hrs.	Task Comp. (Date-Initials)
18. Start and exercise the unit at full rated load (use a load bank if the site load is not enough) for at least 2 hours looking for leaks, loose connections or components, and abnormal operating conditions. Correct as necessary.									●	
19. Perform an engine oil analysis (send a sample to a lab for results). Change the engine oil and filters if the analysis results indicate this is required.							●			
20. Change the engine oil.			●				●		●	
21. Replace the engine oil filter(s).			●				●		●	
22. Replace engine spark plugs. Clean and re-gap or replace as necessary.							●			
23. Replace the engine air filter(s).									●	
24. Perform a 5 minute no-load operational run of the unit looking for any post service problems.			●						●	
25. Return the unit to standby setup for operation when required.	●		●		●		●		●	

TROUBLESHOOTING GUIDE

PROBLEM	CAUSE	CORRECTION
Engine won't crank.	1. 15 amp fuse blown. 2. Loose or corroded or defective battery cables. 3. Defective starter contactor. 4. Defective starter motor. 5. Dead or Defective Battery. 6. 5 amp fuse blown.	1. Replace fuse. 2. Tighten, clean or replace battery cables as necessary. 3. Replace contactor.* 4. Replace starter motor.* 5. Remove, change or replace battery. 6. Replace fuse.*
Engine cranks but won't start	1. Out of fuel. 2. Fuel solenoid (FS) is defective 3. Open Wire #14A from Engine Control circuit board. 4. Spark plugs defective. 5. Door on tank not closed.	1. Replenish fuel. 2. Replace solenoid.* 3. Reconnect wire. 4. Clean, regap or replace plugs. 5. Close door on tank.
Engine starts hard, runs rough.	1. Flame arrestor (air cleaner) plugged or damaged. 2. Plugged fuel line. 3. Defective spark plugs. 4. Fuel pressure incorrect.	1. Clean or replace as needed. 2. Unclog fuel line. 3. Clean, regap or replace plugs. 4. Confirm fuel pressure to regulator is as recommended in SPECIFICATIONS.
Engine starts then shuts down.	1. Engine oil level is low. 2. Engine is overheated. 3. Defective Low Oil Pressure Switch 4. Defective Coolant Temperature Switch 5. Defective Control Module circuit board. 6. Coolant Level is Low. 7. Defective Low Coolant Level Switch	1. Check oil and add oil as needed. 2. Check cooling system for leaks. 3. Replace switch.* 4. Replace switch.* 5. Replace board.* 6. Repair leak - Add coolant. 7. Replace Switch.*
AUTO/OFF/MANUAL Switch at OFF, engine continues to run	1. Defective AUTO/OFF/MANUAL switch 2. Open/disconnected wire #15A between AUTO/OFF/MANUAL switch and Control Module circuit board. 3. Defective Control Module circuit board	1. Replace switch.* 2. Reconnect/close wire. 3. Replace board.*
No AC output from generator.	1. Check main line circuit breaker. 2. Check circuit breaker & fuses. 3. Transfer switch set to NORMAL position 4. Generator internal failure. 5. Thermal circuit breaker open.	1. Reset to ON or CLOSED. 2. Reset and replace, if necessary. 3. Set to GENERATOR position. 4. * 5. Auto-reset - Wait 5 min. and attempt restart.

***Contact the nearest Authorized Dealer for assistance.**

GROUP A

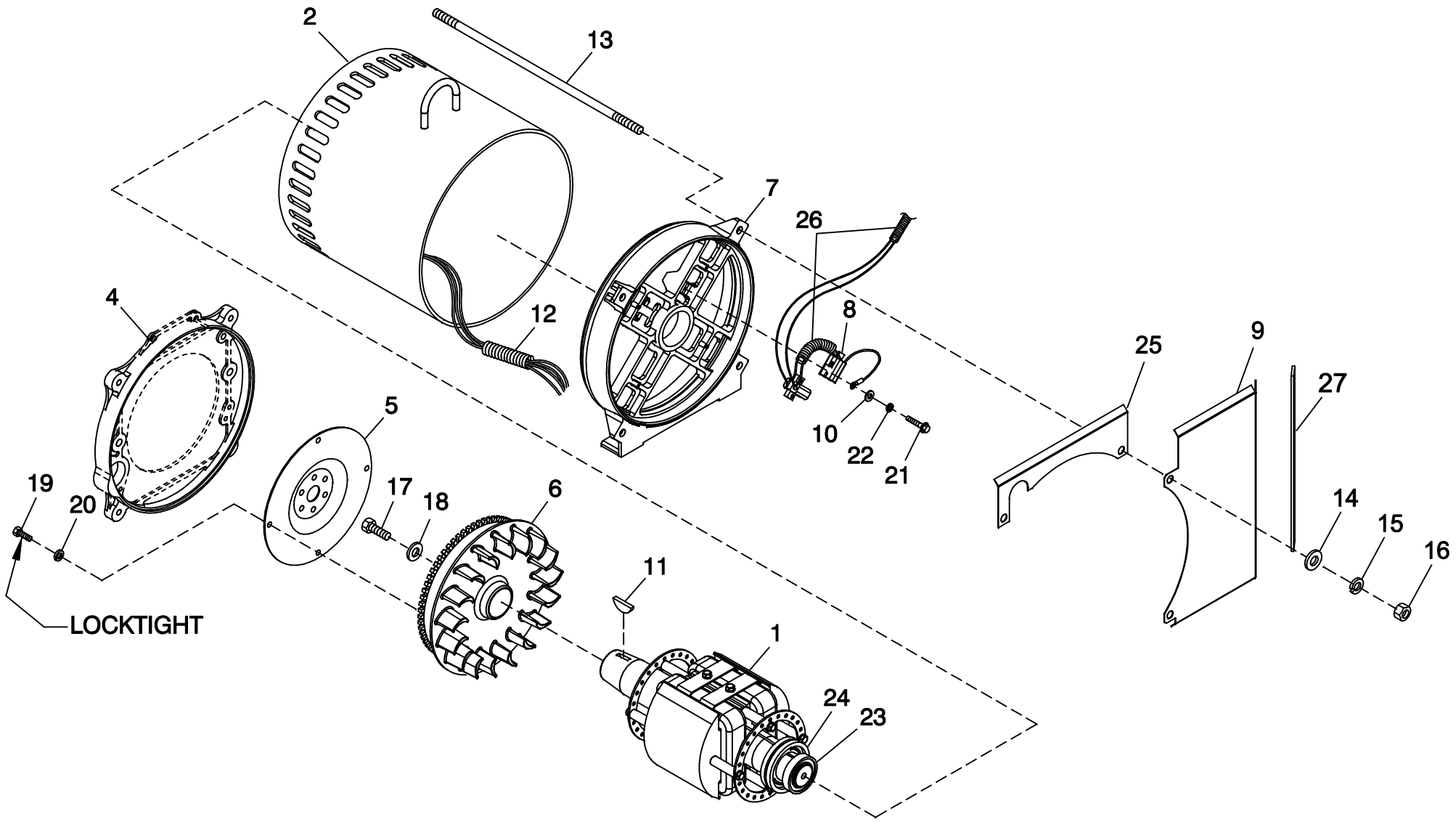

EXPLODED VIEW:
CPL ALTERNATOR DIRECT EXCITATION
DRAWING #: 0F9803

REVISION: H-4010-L
DATE: 3/3/09

EXPLODED VIEW: CPL ALTERNATOR DIRECT EXCITATION
DRAWING #: 0F9803

GROUP A

APPLICABLE TO:

ITEM	PART #	QTY.	DESCRIPTION
1	0F9677	1	ROTOR-2390-45KD1 CPL
	0G0056	1	ROTOR-2390-35KD1 CPL
	0G0959	1	ROTOR-2390-45KD1 CPL (G2)
	0G1155	1	ROTOR-2390-35KD1 CPL (G2)
	0G1931	1	ROTOR 25KW 3PH DIRECT 390 1800
	0G2101	1	ROTOR 25KW 1PH DIRECT 390 1800
	0G3734	1	RTR-2390-60KD2 CPL
	0G6562	1	RTR 390 35AD1 CPL
	0G6564	1	RTR 390 35KD1 CPL
2	0F9664	1	STATOR-390 45K 2P 1PH DIRECT
	0G0057	1	STATOR-2390-35AD1 CPL
	0G0058	1	STATOR-2390-35KD1 CPL
	0G0059	1	STATOR-2390-35GD1 CPL
	0G0183	1	STATOR-2309-45KW 2P 3PH 208V
	0G0184	1	STATOR-2309-45-KD1 CPL
	0G1932	1	ASSY STR 390 25GD3 CPL
	0G2098	1	ASSY STR 390 25AD1 CPL
	0G2099	1	ASSY STR 390 25KD3 CPL
	0G2100	1	ASSY STR 390 25JD3 CPL
	0G3736	1	ASSY STR 2390 60AD2 CPL
	0G3737	1	ASSY STR 390 60KW 2P 3PH 208V
	0G3738	1	ASSY STR 390 60KW 2P 3PH 480V
	0G6104	1	STR-2390--45JD1 CPL
	0G6563	1	STR 390 35AD1 CPL
	0G6565	1	STR 390 35GD1 CPL
	0G6566	1	STR 390 35KD1 CPL
	0G6567	1	STR 390 35JD1 CPL
	0H0201	1	STR-2390--60JD2 CPL
	0H1299	1	ASSY STR 390 36AD1 CPL
	0H1300	1	ASSY STR 390 36JD1 CPL
	0H1301	1	ASSY STR 390 36 GD1 CPL
3	0C9708	REF	INSTR HYPOT TEST (NOT SHOWN)
4	SEE ENGINE EV	REF	ENGINE ADAPTER
5	SEE ENGINE EV	REF	FLEXPLATE
6	0F5767B	1	ASSY FLYWHEEL CPL W/40MM FAN B
7	0E5706	1	REAR BEARING CARRIER 390/DRCT
8	0F7874	1	ASSY BRUSH HOLDER 390/HSB
9	0G0587	1	GUARD REAR BEARING CARRIER
10	038150	4	WASHER FLAT #8 ZINC
11	023454	1	KEY WOODRUFF #E
12	077043E	1	CONDUIT FLEX 1.0" ID (35” LG)
13	04576100BU	4	STUD M14-2.0 570 G5 ZINC
14	052646	4	WASHER FLAT M14
15	043123	4	WASHER LOCK M14
16	051779	4	NUT HEX M14-2.0 G8 YEL CHR
17	0A2601	1	SCREW HHC M16-2.0 X 45 G8.8
18	072879	1	SPACER .69 X 2.75 X .37 ST/ZNC
19	0F8408	4	SCREW HHC M10-1.50 X 16 G10.9
20	046526	4	WASHER LOCK M10
21	0C3992	4	SCREW HHTT M4-0.7 X 16 BP
22	022264	4	WASHER LOCK #8-M4
23 *	047248	1	BALL BEARING-45 MM
24 *	070892	1	SLIP RING MACHINED
25	0G0588	1	GUARD REAR BEARING CARRIER
26	077043A	1	CONDUIT FLEX .38" ID (60”)
27	056326	1	TRIM VINYL BLACK 1/8GP (16.5”LG)

* ROTOR REPLACEMENT PARTS

GROUP A

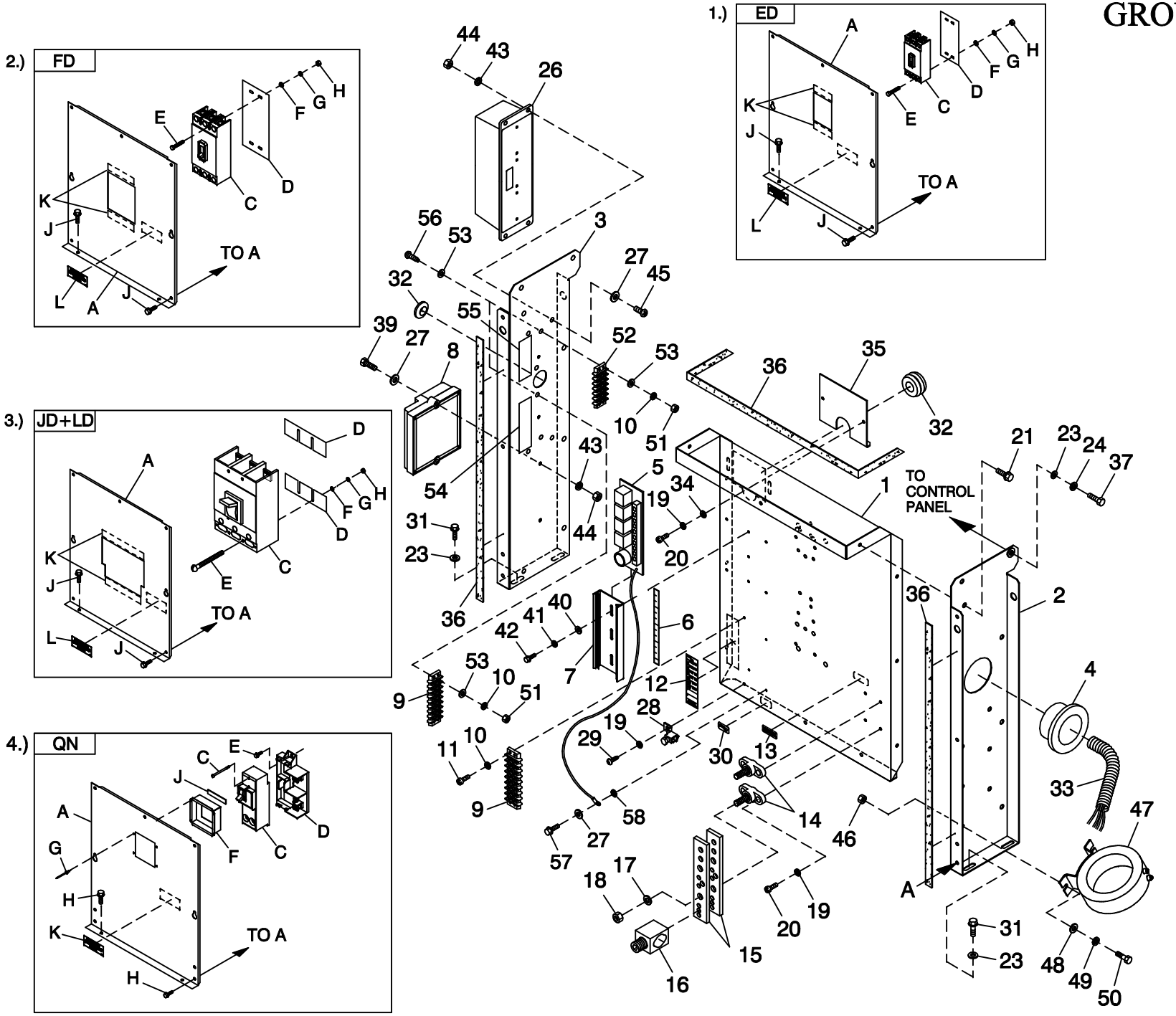

EXPLODED VIEW:
CPL C2 H CONTROL
DRAWING #: 0G2523D

REVISION: H-1436-F
DATE: 11/21/07

EXPLODED VIEW: CPL C2 H CONTROL
DRAWING #: 0G2523D

GROUP A

APPLICABLE TO:

ITEM	PART #	QTY.	DESCRIPTION
1	0F3137	1	PAN CB CONN BOX
2	0F3188	1	STAND RH CONTROL
3	0F3189A	1	STAND LH CONTROL H PNL
4	023484N	1	BUSHING SNAP SB-2.5-31
5	0G6962B	1	ASSY RELAY PCB 12VDC
6	0F0699	1	DECAL SPARE OUTPUT
7	0E9764	6"	RAIL SNAPTRACK PCB HOLDER BULK
8	0G3048	1	ASSY PCB IGNITION MODULE 2.4L
(1) 9	057701	REF	BLOCK TERM 20A 8 X 6 X 1100V
10	022155	6	WASHER LOCK #6
11	0C2428	2	SCREW PHTT #6-32 X 1/2 ZYC
12	0F3618	1	DECAL CPL CUST CONN H CTRL
13	0A9457	1	DECAL NEUTRAL
14	057073	2	JUNCTION BLOCK 3/8-16
(2) 15	0D5466	REF	BUS BAR NEUTRAL BLOCK 390
(2) 16	0A7822	REF	LUG SLDLSS 600/250-1/0 X 1/4-28
17	022237	2	WASHER LOCK 3/8
18	022241	2	NUT HEX 3/8-16 STEEL
19	049226	4	WASHER LOCK M5
20	0C2266	4	SCREW PHTT M5-0.8 X 16 ZYC
21	0C2454	8	SCREW THF M6-1 X 16 N WA Z/JS
23	022473	8	WASHER FLAT 1/4-M6 ZINC
24	022097	4	WASHER LOCK M6-1/4
(1) 26	0F5103	1	INTERFACE 3PH 416/480V
	0F5104	1	INTERFACE 3PH 208/240V
	0F5105	1	INTERFACE 1PH 120/240V
27	023897	7	WASHER FLAT #10 ZINC
28	025433	1	LUG SLDLSS #6-14 X 13/64 CU
29	024469	1	SCREW HHTT #10-32 X 3/8 CZ
30	067210A	1	DECAL GROUND LUG
31	0D6029	4	SCREW HHTT M6-1.0 X 16 ZYC
32	081008	2	GROMMET 1.25 X .25 X .75
33	077043J	1	CONDUIT FLEX 2.0" ID (36" LG)
34	051713	2	WASHER FLAT M5
35	0F6156	1	PLATE WIRE SNGL GALV
36	029289	1	TAPE ELEC 1/2 FOAM (AS REQ'D)
37	047411	4	SCREW HHC M6-1.0 X 16 G8.8
39	036943	2	SCREW PPHM #10/32 X 2
40	043180	2	WASHER FLAT M4
41	022264	2	WASHER LOCK #8-M4
42	0C3990	2	SCREW PHTT M4-0.7 X 10 ZYC
43	022152	2	WASHER LOCK #10
44	022158	6	NUT HEX #10-32 STEEL
45	023964	4	SCREW PRHM #10-32 X 1/2
(3) 46	049813	4/6	NUT HEX M6 X 1.0 G8 YEL CHR
47	0F4281C	2	XFMR CURRENT 200A W/BRKT (120/240 1P)
	0F4281A	3	XFMR CURRENT 100A W/BRKT (120/240 3P, 120/208 3P)
	0F4281	3	XFMR CURRENT 50A W/BRKT (277/480 3P)
(3) 48	022473	4/6	WASHER FLAT 1/4-M6 ZINC
(3) 49	022097	4/6	WASHER LOCK M6-1/4
(3) 50	047411	4/6	SCREW HHC M6-1.0 X 16 G8.8
51	022188	4	NUT HEX #6-32 STEEL
(1) 52	046357	REF	BLOCK TERM 20A 6 X 6 X 1100V
53	022985	8	WASHER FLAT #6 ZINC
54	0G2904	1	DECAL H-100 IFT
55	0G2905	1	DECAL EXCITER
56	022389	4	SCREW RHM #6-32 X 3/4
57	045764	1	SCREW HHTT M4-0.7 X 8 ZP
58	023762	1	WASHER SHAKEPROOF EXT #10 STL
1)		UL CIRCUIT BREAKER (ED)	
A	0F3328	1	COVER ED CB SHORT STND
C	0D5552	1	CB 0050A 3P 480V S ED4 LL
	0D5554	-	CB 0070A 3P 480V S ED4 LL
	0D5556	-	CB 0090A 3P 480V S ED4 LL
	0D9693	-	CB 0125A 3P 480V S ED4 LL
D	0F0492	1	INSULATOR CB S (ED-3P)
E	048927	4	SCREW RHM #10-32 X 4-1/2
F	023897	4	WASHER FLAT #10 ZINC
G	022152	4	WASHER LOCK #10
H	022158	4	NUT HEX #10-32 STEEL
J	0C2454	9	SCREW THF M6-1 X 16 N WA Z/JS
K	029289	1	TAPE ELEC 1/2 FOAM (AS REQ'D)
L	0F1733	1	DECAL CUSTOMER CONNECT INSIDE
2)		UL CIRCUIT BREAKER (FD)	
A	0F3138	1	COVER CB CONN BOX
C	0D5572	1	CB 0150A 3P 600V S FD6 LL
	0D5573	-	CB 0175A 3P 600V S FD6 LL
	0D5574	-	CB 0200A 3P 600V S FD6 LL
	0D5575	-	CB 0225A 3P 600V S FD6 LL
	0D5576	-	CB 0250A 3P 600V S FD6 LL
D	0F0199	1	INSULATOR CB FD FRAME 30MIL
E	081320	4	SCREW SHC 1/4-20 X 4.5 G8.8 NZ
F	022473	4	WASHER FLAT 1/4-M6 ZINC
G	022097	4	WASHER LOCK M6-1/4
H	022127	4	NUT HEX 1/4-20 STEEL
J	0C2454	9	SCREW THF M6-1 X 16 N WA Z/JS
K	029289	1	TAPE ELEC 1/2 FOAM (AS REQ'D)
L	0F1733	1	DECAL CUSTOMER CONNECT INSIDE
3)		UL CIRCUIT BREAKER (JD+LD)	
A	0F3329	1	COVER JD/LD CB SHRT STAND
C	0D5577	1	CB 0300A 3P 600V S JD6 LL
D	0F2353	2	INSULATOR CIRCUIT BR. JD/LD
E	022770	4	SCREW RHM 1/4-20 X 3
F	022473	4	WASHER FLAT 1/4-M6 ZINC
G	022097	4	WASHER LOCK M6-1/4
H	022127	4	NUT HEX 1/4-20 STEEL
J	0C2454	9	SCREW THF M6-1 X 16 N WA Z/JS
K	029289	1	TAPE ELEC 1/2 FOAM (AS REQ'D)
L	0F1733	1	DECAL CUSTOMER CONNECT INSIDE
4)		UL CIRCUIT BREAKER (QN)	
A	0F8135	1	COVER QN FRM CB
C	0E7283	-	CB 0150A 2P 240V S QN2 LL
	0E7284	-	CB 0175A 2P S QN2 LL 240V
D	0E3664	1	BASE, QN CIRCUIT BREAKER
E	074908	2	SCREW HHTT M5-0.8 X 10 BP
F	0F8140	1	COVER QN CB DISH
G	036261	4	RIVET POP .125 X .275 SS
H	0C2454	11	SCREW THF M6-1X16 N WA Z/JS
J	029289	1	TAPE ELEC 1/2 FOAM (AS REQ'D)
K	0F1733	1	DECAL CUSTOMER CONNECT INSIDE

(1) ITEM INCLUDED WITH HARNESS

(2) ITEM INCLUDED WITH 0D5464B

(3) 120/240 1P USES FEWER CURRENT TRANSFORMERS, REQUIRING LESS HARDWARE.

GROUP A

5.)

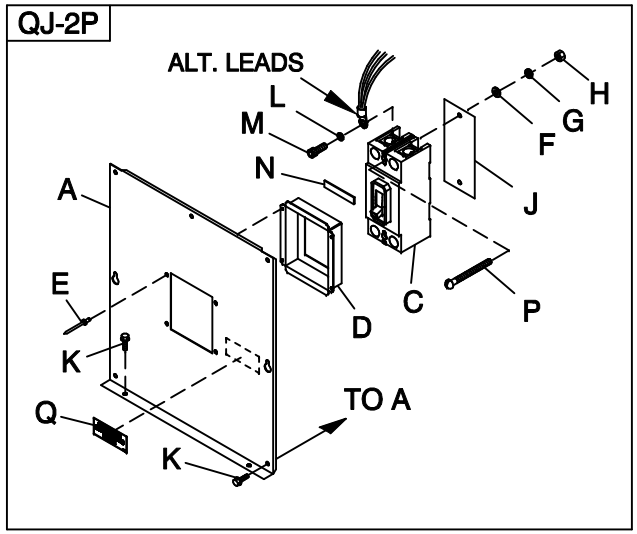

6.)

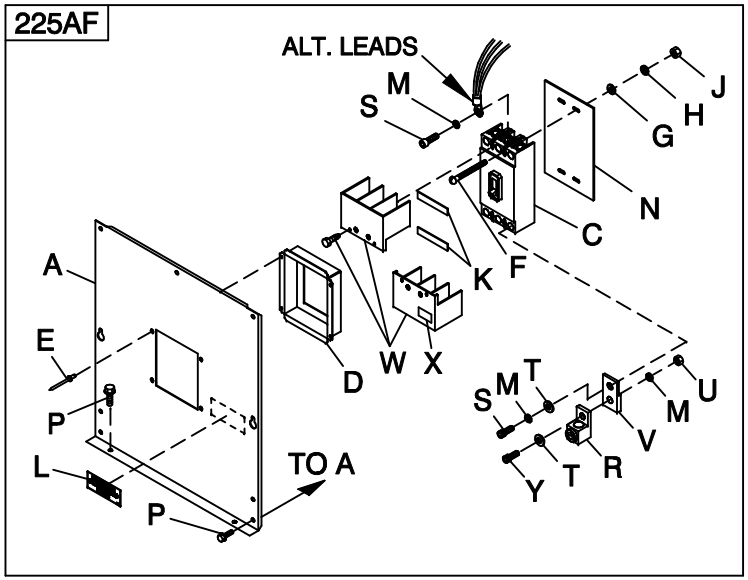

7.)

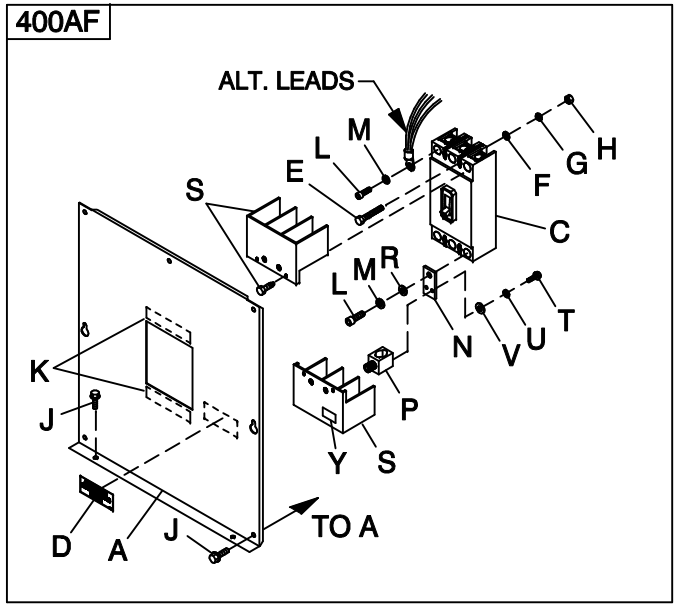

8.)

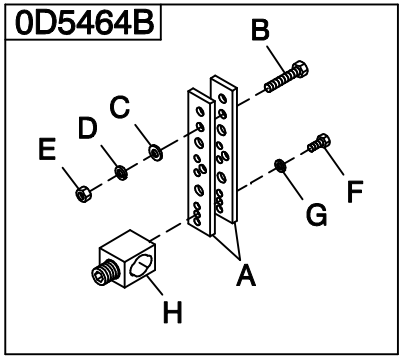

9.)

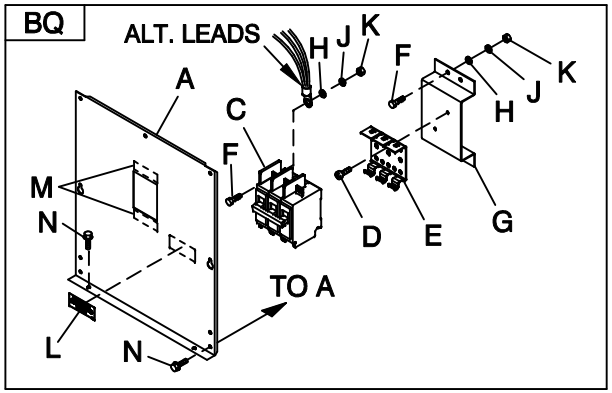

EXPLODED VIEW:
CPL C2 H CONTROL
DRAWING #: 0G2523D

EXPLODED VIEW: CPL C2 H CONTROL
DRAWING #: 0G2523D
APPLICABLE TO:

GROUP A

ITEM	PART #	QTY.	DESCRIPTION
5)			UL CIRCUIT BREAKER (QJ-2P)
A	0F8137	1	COVER QJ 2P FRM CB
C	0E7994	-	CB 0225A 240V 2P S QJ22
D	0F8136	1	COVER QJ 2P CB DISH
E	036261	4	RIVET POP .125 X .275 SS
F	022473	2	WASHER FLAT 1/4-M6 ZINC
G	022097	2	WASHER LOCK M6-1/4
H	022127	2	NUT HEX 1/4-20 STEEL
J	0F8139	1	INSUL CB 2P QJ
K	0C2454	9	SCREW THF M6-1 X 16 N WA Z/JS
L	022237	2	WASHER LOCK 3/8
M	048527	2	SCREW SHC 3/8-16 X 3/4 G8.8 NZ
N	029289	1	TAPE ELEC 1/2 FOAM (AS REQ'D)
P	022770	2	SCREW RHM 1/4-20 X 3
Q	0F1733	1	DECAL CUSTOMER CONNECT INSIDE
6)			UL CIRCUIT BREAKER (225AF)
A	0F4185	1	COVER CB C2-C4 225AF
C	0F4165$	REF	CIRCUIT BREAKERS 200A FRAME
	0F4143	REF	CIRCUIT BREAKER 0040A 3P 480V 225AF
D	0F4186	1	COVER CB DISH 225AF
E	036261	4	RIVET POP .125 X .275 SS
F	053640	4	SCREW RHM #8-32 X 3-1/4
G	038150	4	WASHER FLAT #8 ZINC
H	022264	4	WASHER LOCK #8-M4
J	022471	4	NUT HEX #8-32 STEEL
K	029289	2	TAPE ELEC 1/2 FOAM
L	0F1733	1	DECAL CUSTOMER CONNECT INSIDE
M	022129	9	WASHER LOCK M8-5/16
N	0F8432	1	INSULATOR CB 225AF
P	0C2454	11	SCREW THF M6-1 X 16 N WA Z/JS
R	0F8451	3	LUG SLDLSS 300 MCM-6 AL/CU
S	049897	6	SCREW SHC M8-1.25 X 20 G8
T	022145	6	WASHER FLAT 5/16-M8 ZINC
U	045771	3	NUT HEX M8-1.25 G8 CLEAR ZINC
V	0F8843	3	BUS BAR 200A LUG ADAPTOR
(1) W	W/CB	2	TERMINAL COVER CB
X	0G3259	1	DECAL TERMINAL SHOCK HZD BI
Y	058306	3	SCREW SHC M8-1.25 X 25 G12.9
7)			UL CIRCUIT BREAKER (400AF)
A	0F4187	1	COVER CB C2-C4 400AF
C	0F4166$	REF	CIRCUIT BREAKERS 400A FRAME
D	0F1733	1	DECAL CUSTOMER CONNECT INSIDE
E	042419	4	SCREW RHM 10-32 X 4
F	023897	4	WASHER FLAT #10 ZINC
G	022152	4	WASHER LOCK #10
H	022158	4	NUT HEX #10-32 STEEL
J	0C2454	9	SCREW THF M6-1 X 16 N WA Z/JS
K	029289	1	TAPE ELEC 1/2 FOAM
(2) L	052647	2/3	SCREW SHC M10-1.5 X 25 G12.9
(2) M	046526	2/3	WASHER LOCK M10
N	W/CB	3	BUS BAR CB ADAPTER 225-400 A
P	0A7822	3	LUG SLDLSS 600/250-1/0 X 1/4-28
(1) S	W/CB	2	TERM COVER CB
T	023334	6	SCREW HHC 1/4-28 X 1/2 G5
U	022097	6	WASHER LOCK M6-1/4
V	022473	6	WASHER FLAT 1/4-M6 ZINC
(2) W	W/CB	2/3	SCREW SHC M10-1.5 X 25 G12.9
(2) X	W/CB	2/3	WASHER LOCK M10
Y	0G3259	1	DECAL TERMINAL SHOCK HZD BI

ITEM	PART #	QTY.	DESCRIPTION
8)			NEUTRAL BLOCK 390 / 200-400A
A	0D5466	2	BUS BAR NEUTRAL BLOCK 390
B	039287	1	SCREW HHC M8-1.25 X 45 G8.8 FT
C	022145	1	WASHER FLAT 5/16-M8 ZINC
D	022129	1	WASHER LOCK M8-5/16
E	045771	1	NUT HEX M8-1.25 G8 YEL CHR
F	045335	2	SCREW HHC 1/4-28 X 3/4 G5
G	083896	2	WASHER LOCK 1/4-M6 SS
H	0A7822	1	LUG SLDLSS 600/250-1/0 X 1/4-28
9)			UL CIRCUIT BREAKER (BQ)
A	0G1968	1	COVER BQ CIR BREAKER CPL 3P
	0G1970	-	COVER BQ CIR BREAKER CPL 2P
C	0A2077	1	CB 0125A 2P 240V S BQ2 LL
	040532	-	CB 0100A 3P 240V S BQ3 LL
	062812	-	CB 0080A 3P 240V S BQ3 LL
D	0C3990	2	SCREW PHTT M4-0.7 X 10 ZYC
E	0E7890	1	BRKT CB MTG BACK
	0E6002	-	MTG TRACK BQ SIEMENS CB 3P
F	022859	6	SCREW RHM #10-32 X 3/4
G	0G0008	1	BRKT BQ CB STANDOFF
H	023897	6	WASHER FLAT #10 ZINC
J	022152	6	WASHER LOCK #10
K	022158	6	NUT HEX #10-32 STEEL
L	0F1733	1	DECAL CUSTOMER CONNECT INSIDE
M	029289	1	TAPE ELEC 1/2 FOAM
N	0C2454	11	SCREW THF M6-1 X 16 N WA Z/JS

(1) HARDWARE FOR MTG. CB TERMINAL COVERS IS SUPPLIED WITH CIRCUIT BREAKERS.

(2) 2/3 QTY. 2 POLE & 3 POLE CB.

GROUP B

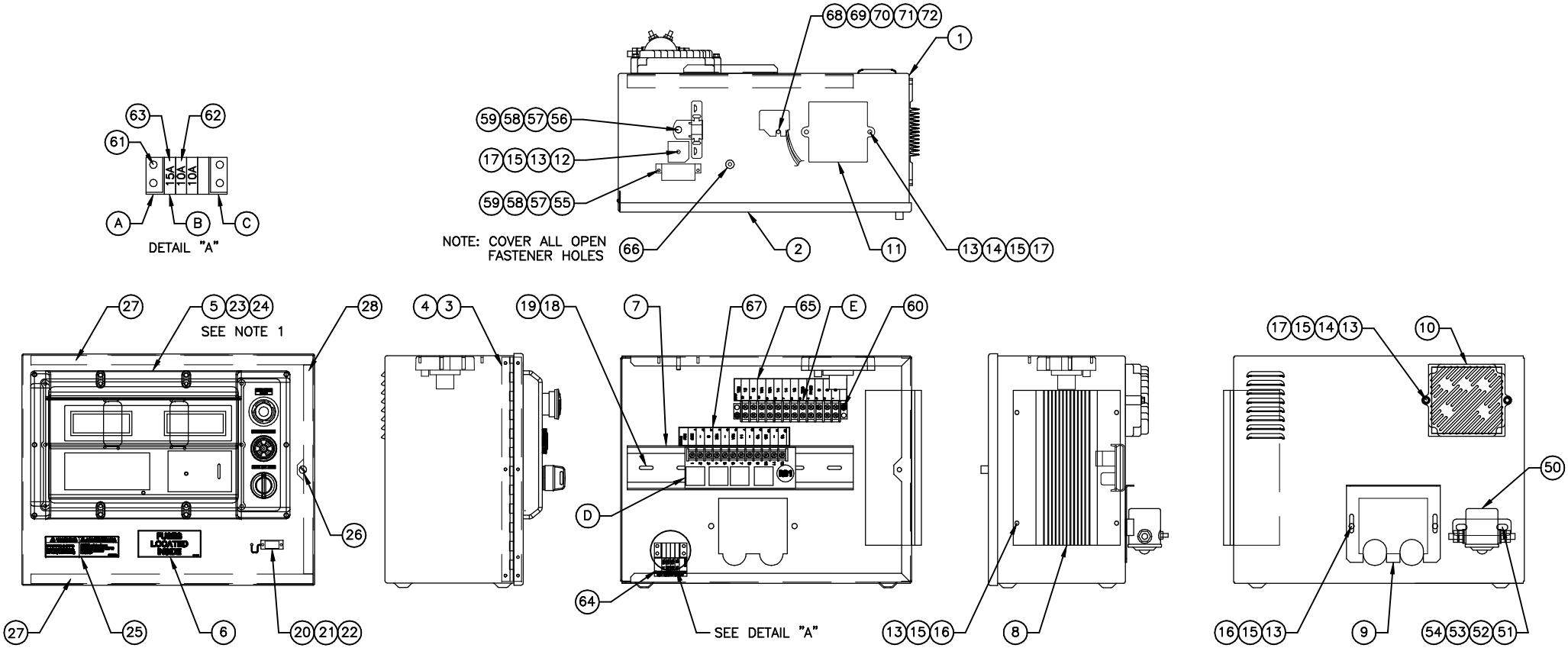

NOTE 1: ITEM 29 ATTACHES TO CONTACT ON REAR OF ITEM 5

REVISION: H-1483-B
DATE: 12/04/07

EXPLODED VIEW:
H-PANEL 10A BATTERY CHARGER E-GOV 12V
DRAWING #: 0G5337D

EXPLODED VIEW: H-PANEL 10A BATTERY CHARGER E-GOV 12V
DRAWING #: 0G5337D

GROUP B

APPLICABLE TO:

ITEM	PART #	QTY.	DESCRIPTION
			COMPONENTS INCLUDED IN 0G4140E
1	0F1823CST06	1	ENCL H/G CONTROL PANEL
2	0F1824AST06	1	COVER CONTROL PANEL
3	0F2606	1	HINGE CONTINUOUS H PANEL
4	036261	7	RIVET POP .125 X .275 SS
5	0F5763	1	ASSY PROGRAMMED H-100
6	0F1732	1	DECAL FUSES LOCATED INSIDE
7	0E9764	1 FT.	RAIL SNAPTRACK PCB HOLDER BULK
8	0F1740C	1	ASSY PCB 10A UL BATT CHRGR 12V
9	0F1958	1	PLATE HARNESS CLAMP
10	0F2256	1	ASSY PCB PWR AVR W/AMP HEADER
11	0E3161	1	ASSY PCB BOSCH GOV DRIVER
12	029673	1	DIO BRIDGE 25A 600V
13	049226	11	WASHER LOCK M5
14	079224	4	SCREW PPHM M5-0.8 X 30 SS
15	051713	11	WASHER FLAT M5
16	0F5886	6	SCREW HHPM M5-0.8 X 12
17	051716	5	NUT HEX M5-0.8 G8 YEL CHR
18	043180	3	WASHER FLAT M4
19	0C3990	3	SCREW PHTT M4-0.7 X 10 ZYC
20	0F4333	1	CONN DUST CAP W/CHAIN DB9
21	0F5883	1	WASHER FLAT M3.5
22	0F5884	1	SCREW PHTT M3.5-0.6 X 10
23	055014	10	SCREW PPHM M4-0.7 X 8 BLX OX
24	022264	10	WASHER LOCK #8-M4
25	0G3546	1	DECAL WRN BATT CHRG 12/24V BI
26	0G3648	1	M5-0.8 CAPTIVE PANEL KNLD HD
27	0F6305	2	SEAL COVER 3.18 X 12.7 X 382
28	0F6305A	1	SEAL COVER 3.18 X 12.7 X 283
29	0G4329	1	HARNESS H-PNL INTEGRATED SW (NOT SHOWN)
			COMPONENTS INCLUDED IN WIRE HARNESS
A	0F1263	1	ADPTR RH SIDE WICKMANN 178.6191
B	0F1262	4	HOLDER FUSE WICKMANN 178.6150
C	0F1264	1	ADPTR LH SIDE WICKMANN 178.6192
D	0E9049B	1	ASSY PCB G-PANEL RELAY 12VDC
E	055911	1	BLOCK TERM 20A 12 X 6 X 1100V

ITEM	PART #	QTY.	DESCRIPTION
			COMPONENTS NOT INCLUDED IN 0G4140E OR WIRE HARNESS
50	056739	1	RELAY CONTACTOR 12VDC
51	022287	2	SCREW HHC 1/4-20 X 3/4 G5
52	022473	4	WASHER FLAT M6 - 1/4
53	022097	2	WASHER LOCK M6 - 1/4
54	022127	2	NUT HEX 1/4-20 STEEL
55	048467	REF.	CIRCT BRK 7 X 1 ETA 46-500-P
56	0F5752F	REF.	RES WW 15R 5% 25W QK CONN
57	043182	REF.	WASHER LOCK M3
58	051714	REF.	NUT HEX M3-0.5 G8 YEL CHR
59	052777	REF.	WASHER FLAT M3
60	0C2323	2	SCREW PHTT #6-32 X 5/8 ZYC
61	0C2699	2	SCREW PHTT #6-32 X 3/8 ZYC
62	0E7403B	2	FUSE ATO TYPE 10 AMP (RED)
63	0E7403C	1	FUSE ATO TYPE 15 AMP (BLUE)
64	0F5459	1	DECAL CPL CONTROL PANEL FUSES
65	0F5461	1	DECAL CPL 5.4/6.8L TB3
66	0F6145	A/R	SEAL WEATHER .45" DIA
67	0F5460	1	DECAL CPL 5.4/6.8L RELAY BOARD
68	0G2305	1	ASSY PCB CAM TO DIST SENSOR
69	091526	1	SCREW PPHM M5-0.8 X 12 ZNC
70	051713	1	WASHER FLAT M5
71	049226	1	WASHER LOCK M5
72	051716	1	NUT HEX M5-0.8 G8 CLEAR ZINC

GROUP C

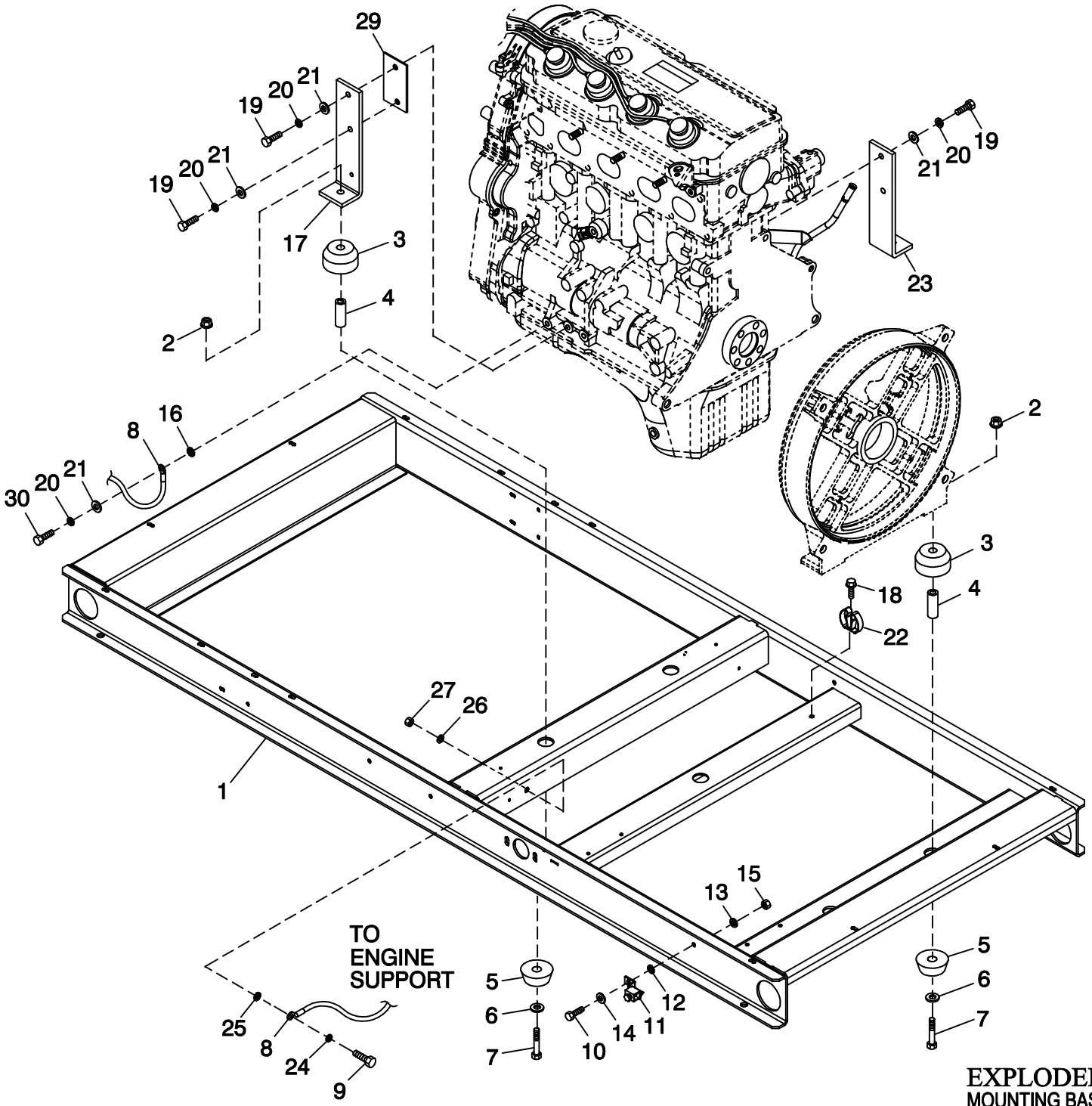

EXPLODED VIEW:
MOUNTING BASE 2.4L C2
DRAWING #: 0F9807

REVISION: H-4307-D
DATE: 4/15/09

EXPLODED VIEW: MOUNTING BASE 2.4L C2
DRAWING #: 0F9807

GROUP C

APPLICABLE TO:

ITEM	PART #	QTY.	DESCRIPTION
1	0F9517	1	WELDMENT FRAME 2.4L C2
2	052860	4	NUT FLANGED HEX M12-1.75
3	052251	4	DAMPENER VIBRATION 40 BLUE
4	052257	4	SPACER .49 X .62 X 1.87 PWDR/ZNC
5	052252	4	DAMPENER VIBRATION
6	052259	4	WASHER FLAT M12
7	052891	4	SCREW HHC M12-1.75 X 80 G8.8
8	0536210410	1	ASSY WIRE 14.00"
9	042909	1	SCREW HHC M8-1.25 X 30 G8.8
10	047411	1	SCREW HHC M6-1.0 X 16 G8.8
11	055414	1	LUG SLDLSS #2-#8 X 17/64 CU
12	022447	1	WASHER SHAKEPROOF INT 1/4
13	022097	1	WASHER LOCK M6-1/4
14	022473	2	WASHER FLAT M6-1/4 ZINC
15	049813	1	NUT HEX M6 -1.0 G8 YEL CHR
16	022261	1	WASHER SHAKEPROOF INT 3/8
17	0F9597A	1	SUPPORT LH ENGINE 2.4L
18	045764	1	SCREW HHTT M4-0.7 X 8 BP
19	062963	4	SCREW HHC M10-1.25 X 30 G8.8
20	022302	5	WASHER LOCK 7/16
21	022131	5	WASHER FLAT 3/8-M10 ZINC
22	065852	1	SPRING CLIP HOLDER .37-.62
23	0F9597	1	SUPPORT RH ENGINE 2.4L
24	022129	1	WASHER LOCK M8-5/16
25	026204	1	WASHER SHAKEPROOF INT 5/16
26	022145	1	WASHER FLAT 5/16-M8 ZINC
27	045771	1	NUT HEX M8-1.25 G8 CLEAR ZINC
29	0F9596	1	SPACER ENGINE MOUNT (2.4L G1)
	0F9596A	1	SPACER LH ENGINE MOUNT (2.4L G2)
30	052212	1	SCREW HHC M10-1.25 X 25 C8.8

GROUP C

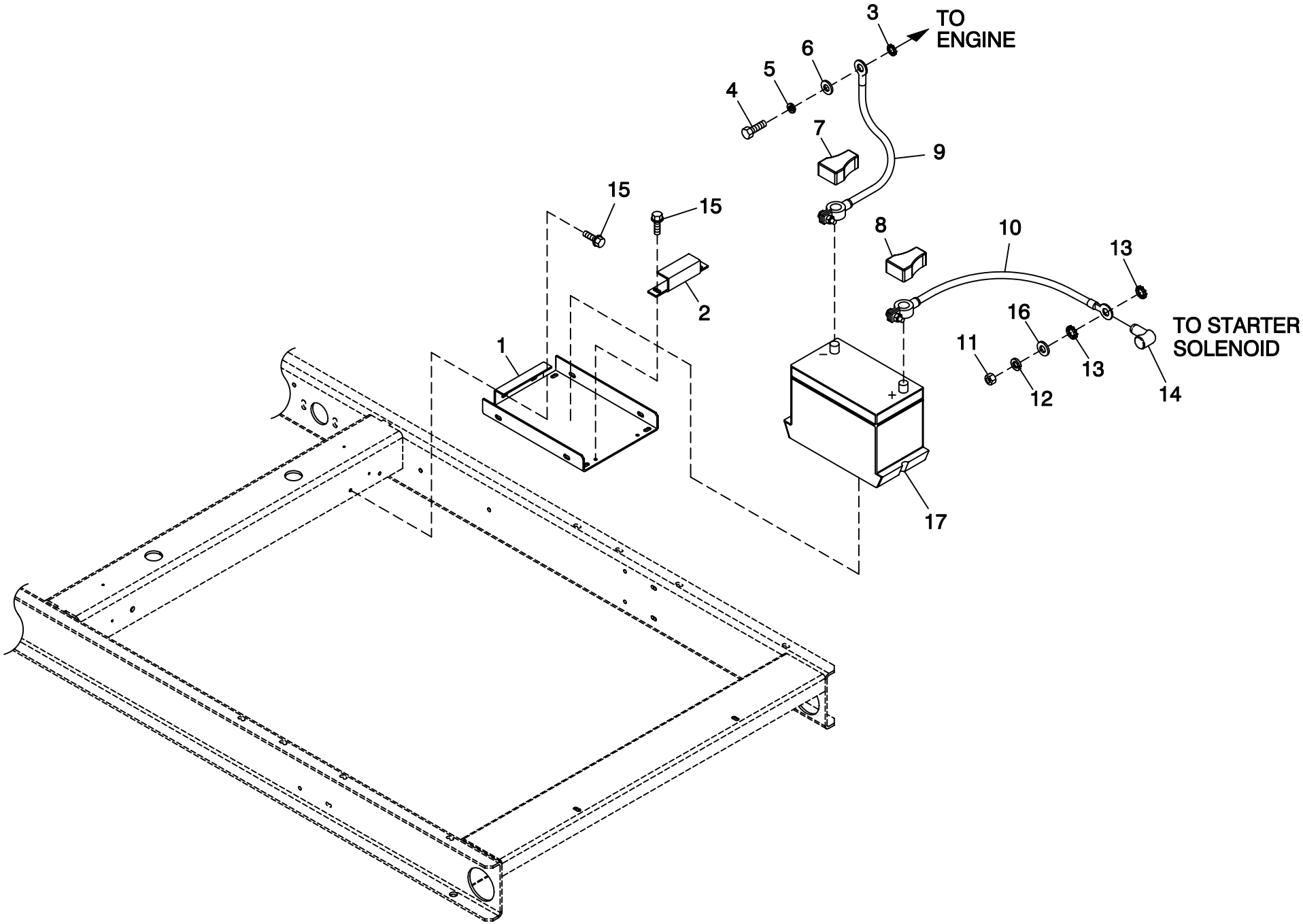

EXPLODED VIEW:
BATTERY 2.4L CPL
DRAWING #: 0F9813

REVISION: G-7805-B
DATE: 4/3/06

EXPLODED VIEW: BATTERY 2.4L CPL
DRAWING #: 0F9813

GROUP C

APPLICABLE TO:

ITEM	PART #	QTY.	DESCRIPTION
1	0F3408B	1	BATTERY TRAY C1 CPL
2	0F3411	1	STRAP BATTERY RETAINMENT
3	025507	REF	WASHER SHAKEPROOF EXT 7/16 STL
4	052212	REF	SCREW HHC M10-1.25 X 25 G8.8
5	046526	REF	WASHER LOCK M10
6	022131	REF	WASHER FLAT 3/8-M10 ZINC
7	050331A	REF	BATTERY POST COVER RED +
8	050331	REF	BATTERY POST COVER BLACK -
9	038805Y	1	CABLE BATTERY BLACK #1 X 18.00
10	03880400AE	1	CABLE BATT RED #1 X 18.00
11	045771	REF	NUT HEX M8-1.25 G8 YEL CHR
12	022129	REF	WASHER LOCK M8-5/16
14	0F3976	1	BOOT CONTACTOR CABLES
15	0C2454	4	SCREW THF M6-1 X 16 N WA Z/JS
16	022145	REF	WASHER FLAT 5/16-M8 ZINC
17	077483	REF	BATTERY 12VDC 75-AH 26

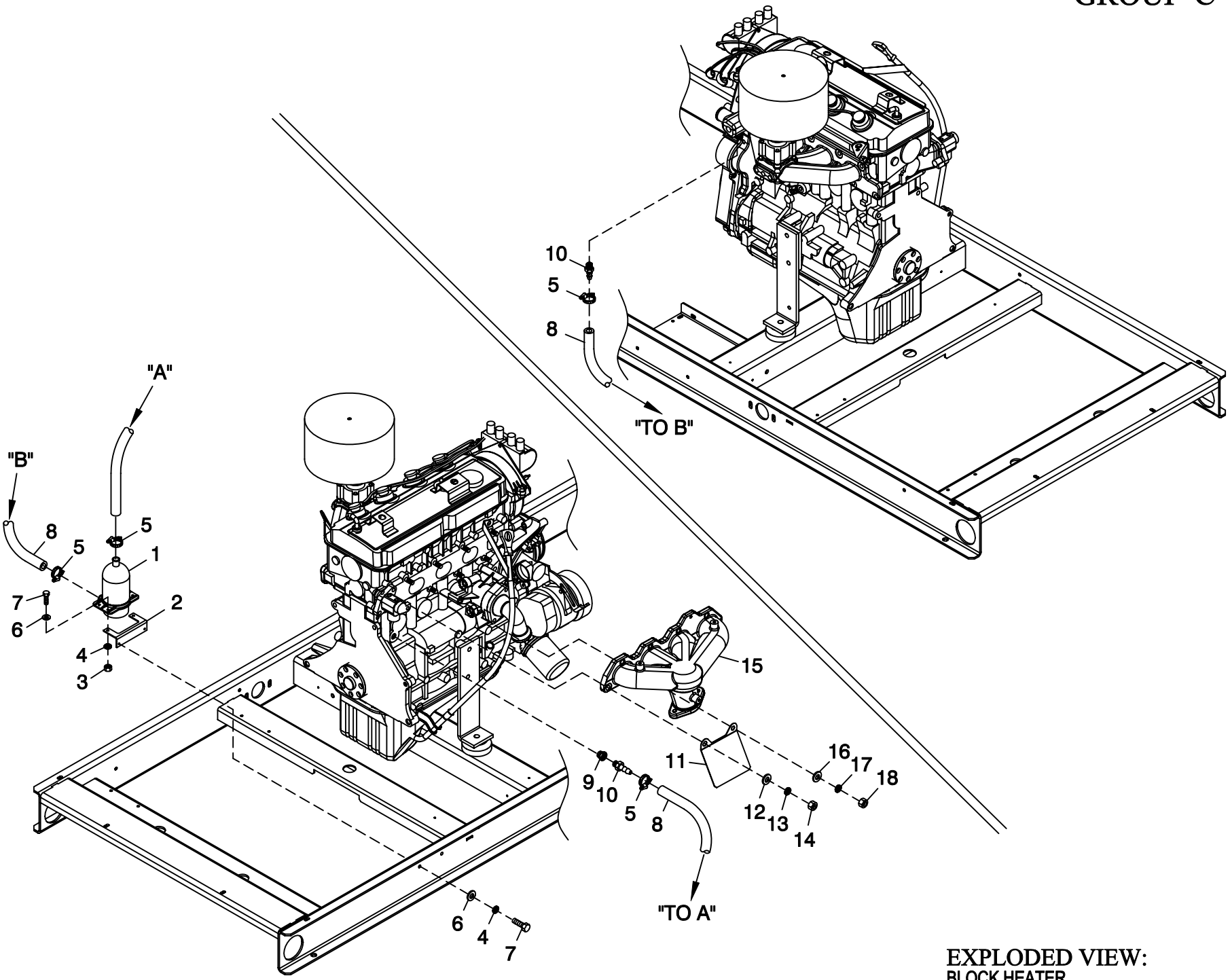

EXPLODED VIEW:
BLOCK HEATER
DRAWING #: 0G1803

REVISION: G-8362-A
DATE: 6/15/06

EXPLODED VIEW: BLOCK HEATER
DRAWING #: 0G1803

APPLICABLE TO:

GROUP C

ITEM	PART #	QTY.	DESCRIPTION
1	084918G	1	HEATER BLOCK 1500W 120V
2	084427	1	BRACKET HEATER W/WELDNUTS
3	049813	2	NUT HEX M6 X 1.0 G8 YEL CHR
4	022097	4	WASHER LOCK M6-1/4
5	057822	4	CLAMP HOSE #8 .53-1.00
6	022473	4	WASHER FLAT 1/4-M6 ZINC
7	042568	4	SCREW HHC M6-1.0 X 20 G8.8
8	050967	2	HOSE COOL 5/8 ID 20R3 (66” LG)
9	0F2579	2	ADAPTER 3/8 BSPT M X 3/8 NPT F
10	044117	2	BARBED STR 3/8 NPT X 5/8
11	0G1789	1	SHIELD HEAT WATER INLET
12	022131	1 (REF)	WASHER FLAT 3/8-M10 ZINC
13	046526	1 (REF)	WASHER LOCK M10
14	046525	1 (REF)	NUT HEX M10-1.25 G8 YEL CHR
15	0G0608	1 (REF)	MANIFOLD EXHAUST (MACHINED)
16	022145	1 (REF)	WASHER FLAT 5/16-M8 ZINC
17	022129	1 (REF)	WASHER LOCK M8-5/16
18	045771	1 (REF)	NUT HEX M8-1.25 G8 CLEAR ZINC

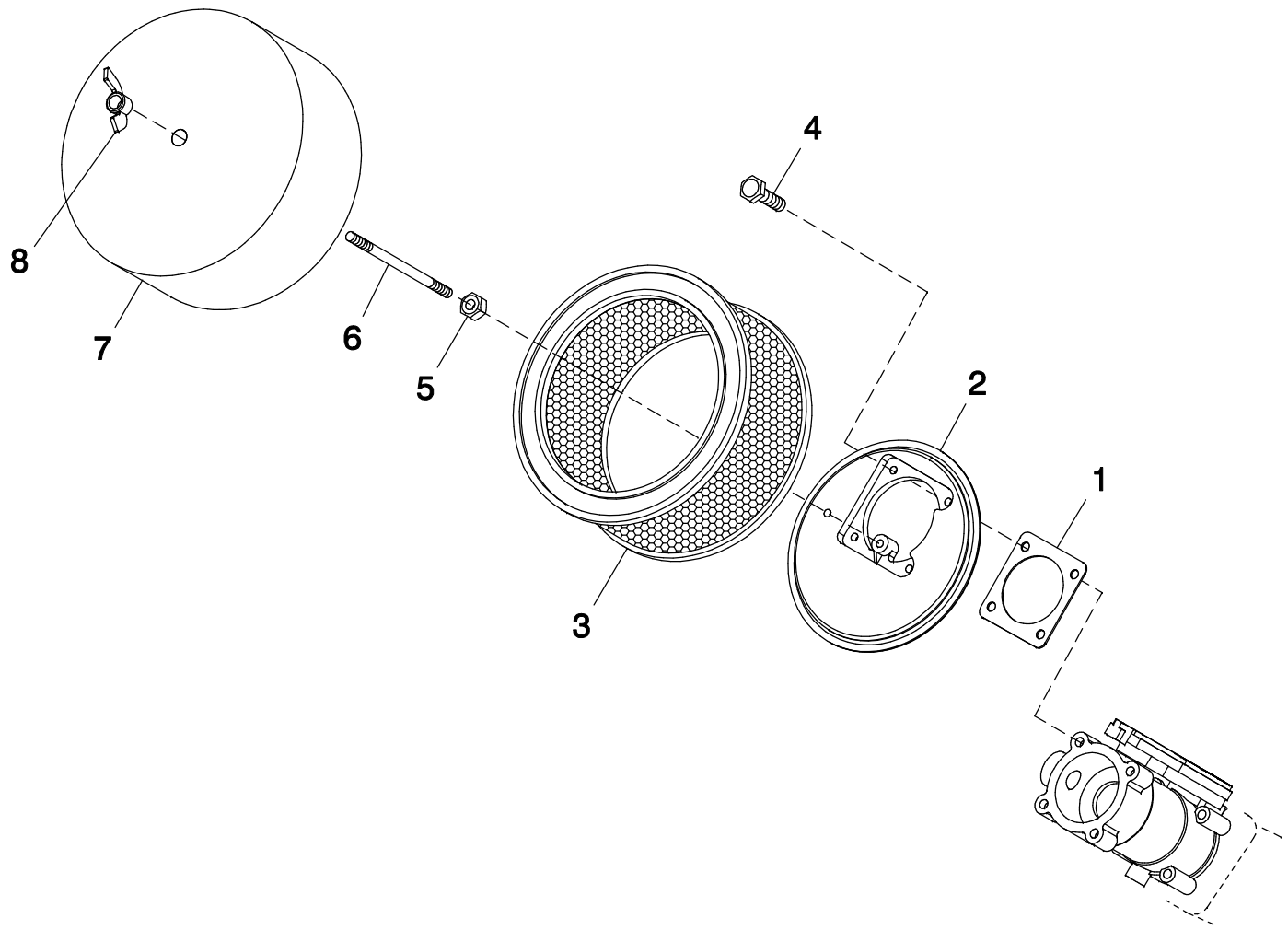

EXPLODED VIEW:
AIR CLEANER C2
DRAWING #: 0F9809

REVISION: H-1248-A
DATE: 10/18/07

EXPLODED VIEW: AIR CLEANER C2
DRAWING #: 0F9809

GROUP D

APPLICABLE TO:

ITEM	PART #	QTY.	DESCRIPTION
1	0E6586	1	GASKET BOSCH 32 & 40
2	0E0519A	1	ADAPTER CARBURETOR W/PVC CONN
3	0C8127	1	ELEMENT AIR CLEANER
4	049815	4	SCREW HHC M5-0.8 X 16 G8.8
5	022127	1	NUT HEX 1/4-20 STEEL
(1) 6	062974	1	STUD TH 1/4-20 X 4-1/2 G2 ZNC
7	0G0190	1	PLATE, AIR CLEANER TOP 2.4L
8	037561	1	NUT WING 1/4-20 NYLK

(1) APPLY MEDIUM STRENGTH BLUE TREAD LOCKING FLUID TO THREADS ON ONE END OF I/N 6 (STUD) THAT SCREWS INTO I/N 2 (CARB ADAPTER).

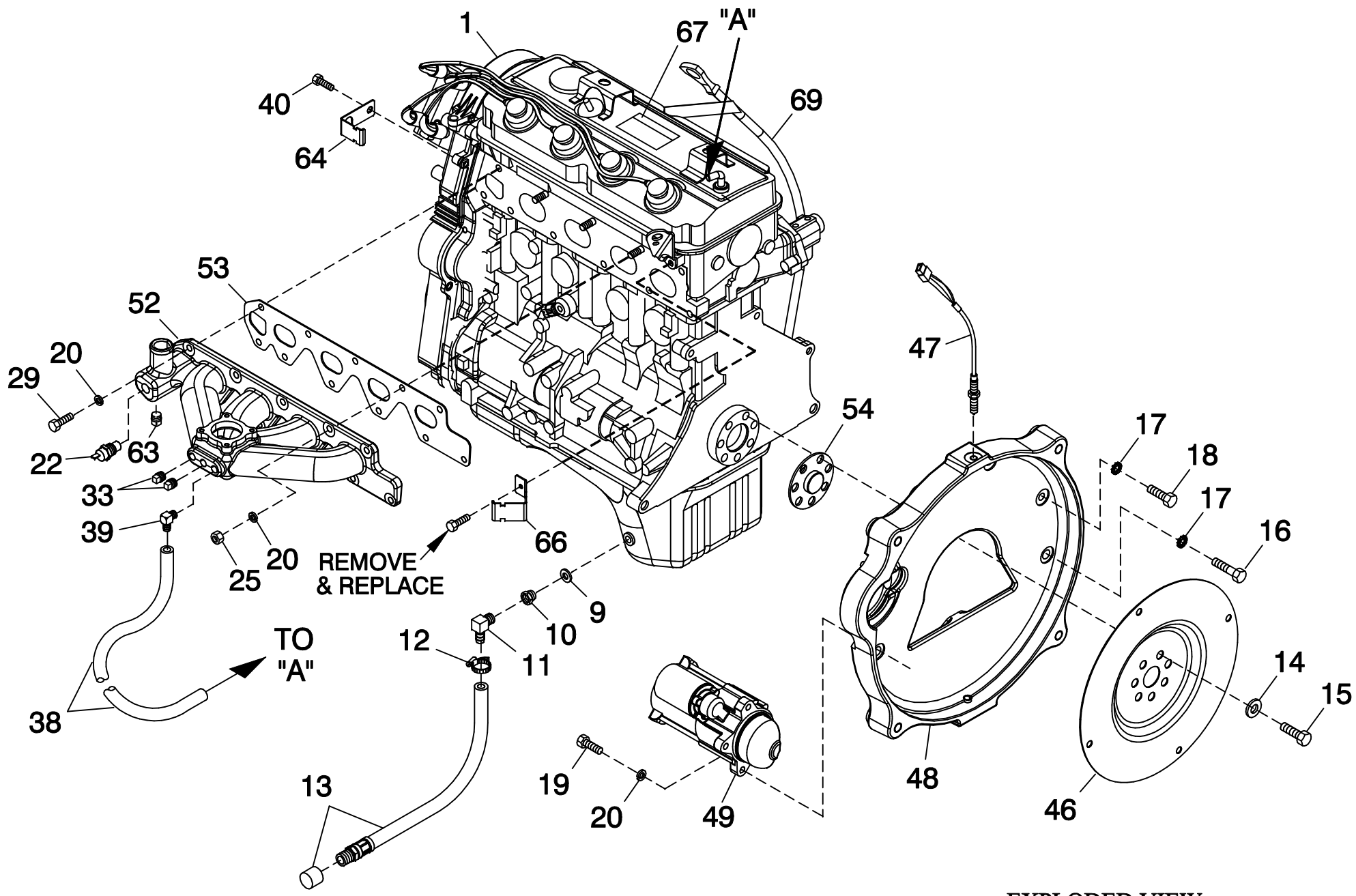

EXPLODED VIEW:
ENG COMMON PARTS 2.4L G2
DRAWING #: 0G1141

REVISION: H-4485-S
DATE: 5/15/09

EXPLODED VIEW: ENG COMMON PARTS 2.4L G2
DRAWING #: 0G1141

APPLICABLE TO:

GROUP D

ITEM	PART #	QTY.	DESCRIPTION
1	0H1951	1	ENGINE 2.4L G2 4G64 CERT
	0H1619	1	ENGINE 2.4L G2 CERTIFIED
2	046526	3	WASHER LOCK M10
3	039414	4	SCREW HHC M8-1.25 X 35 G8.8
4	0G0149	1	SCREW SHC M14-1.5 X 35 G10.9
5	0E9868A	1	ALTERNATOR DC W/OUT PULLEY
(2) 6	0F3217	1	SPACER DC ALTERNATOR PULLEY
7	042574	1	ADAPTOR 1/8 NPTF TO 1/8 BSPT
8	0A8584	1	SWITCH OIL PRESSURE 10 PSI 2 POL (R-PANEL)
	0F4612	1	SENDER OIL PRESSURE 1/8" NPT (H-PANEL)
9	057772	1	WASHER NYLON .565
10	057765	1	ADAPTER M14-1.50 X 3/8 NPT
11	043790	1	BARBED EL 90 3/8 NPT X 3/8
12	0C7649	1	CLAMP HOSE .38-.87
13	069860E	1	HOSE DRAIN ASSY 28"
14	063076	7	WASHER FLAT .531 ID X 1.062 OD
15	0G1394	7	SCREW HHC M12-1.25 X 20 G10.9
16	052830	2	SCREW HHC M10-1.25 X 45 G8.8
17	025507	5	WASHER SHAKEPROOF EXT 7/16 STL
18	062963	3	SCREW HHC M10-1.25 X 30 G8.8
19	049821	3	SCREW SHC M8-1.25 X 30 G12.9
20	022129	26	WASHER LOCK M8-5/16

ITEM	PART #	QTY.	DESCRIPTION
21	0D6029	3	SCREW THF M6-1 X 16 N WA Z/JS
22	0A6751	1	SWITCH HI-TEMP 245D X 3/8 NPT (R-PANEL)
	0E0502	1	TEMPERATURE SENDER DELPHI (H-PANEL)
23	022145	7	WASHER FLAT 5/16-M8 ZINC
25	045771	3	NUT HEX M8-1.25 G8 CLEAR ZINC
26	022131	1	WASHER FLAT 3/8-M10 ZINC
27	049813	3	NUT HEX M6 X 1.0 G8 YEL CHR
28	046525	2	NUT HEX M10-1.25 G8 YEL CHR
29	058306	15	SCREW SHC M8-1.25 X 25 G12.9
30	022097	7	WASHER LOCK M6-1/4
31	022473	10	WASHER FLAT 1/4-M6 ZINC
32	043116	4	SCREW HHC M6-1.0 X 12 G8.8
33	026073A	2	PLUG STD PIPE 1/4 STEEL SQ HD
34	052243	1	SCREW HHC M10-1.5 X 60 G8.8
35	0A8258	1	SCREW HHC M8-1.25 X 25 G10.9
(1) 36	0G0664	1(REF)	OIL FILTER G2 ENGINE
37	0G1502	1	COIL PACK
38	047290	1	HOSE 3/8 ID SINGLE BRAID (15" LG)
39	049340	1	BARBED EL 90 1/4 NPT X 3/8
(3) 40	045757	1	SCREW HHC M6-1.0 X 25 G8.8
(1) 44	0G0951	1(REF)	GASKET EXHAUST MANIFOLD
45	0G3910	1	EXHAUST MANIFOLD G2 (MACHINE) (25KW, 35KW & 45KW)
46	0G6093E	1	FLEX PLATE 2 POLE 2.4L G2
47	0D2244M	2	ASSY MAGPICKUP(3/8-24 MALE)
48	0F9420	1	ADAPTER ENGINE 2.4L MACHINE
49	0G7461	1	STARTER MOTOR 12V
50	0G1472A	1	CAM SENSOR PIN ASSY
51	0G1476	1(REF)	COVER CAM GEAR G2 REWORKED
52	0G0707	1	MANIFOLD INTAKE (USE HOSE 0G0816)
	0G8488	1	MANIFOLD INTAKE (MACHINED) (USE HOSE 0H1546)
(1) 53	0G0950	1(REF)	GASKET INTAKE MANIFOLD
54	0F9583	1	SPACER 2.4L G2 FLEX PLATE
55	0G0792	1	SHIELD HEAT G2
56	0G0792A	1	SHIELD HEAT SML
57	0G1501	1	BRACKET COIL PACK
59	0F9501	1	ADAPTER 2.4L CRANKSHAFT MACH
(1) 60	0G0952	1(REF)	POLY V-BELT G2 (3600 RPM)
	0D3488S	1	BELT SERPENTINE 37.0" (1800 RPM)
61	0G0788	1	PULLEY DC ALTERNATOR (3600 RPM)
	0G2750	1	PULLEY 69 OD DC ALTERNATOR (1800 RPM)
62	049721	3	SCREW HHC M6-1.0 X 35 G8.8 BLK
63	026925	1	PLUG STD PIPE 3/8 STEEL SQ HD
(3) 64	0F2776	1	BRACKET, SIGNAL CONDITIONER
65	052203	2	SCREW HHC M8-1.25 X 70 G8.8
(3) 66	0F2776D	1	BRACKET SIGNAL CONDITONER
67	0G7313	1(REF)	DECAL EMISSION CTRL INFO 2.4L
69	0G10080125	1	ROD ASSY OIL LEVEL GAUGE
70	0G3823	1	O-RING SIZE 9.0MM X 2.0MM NITR
71	0G10080288	1	CABLE, SPARK PLUG, NO.1
72	0G10080289	1	CABLE, SPARK PLUG, NO.2
73	0G10080290	1	CABLE, SPARK PLUG, NO.3
74	0G10080291	1	CABLE, SPARK PLUG, NO.4
(4) 75	0G9520	1(REF)	PLUG TAPER

(1) SUPPLIED WITH ENGINE.
(2) NOT USED ON 1800 RPM UNITS.
(3) USED WITH H-PANEL ONLY
(4) APPLY LOCTITE 620 BEARING RETAINMENT COMPOUND TO I/N 75.

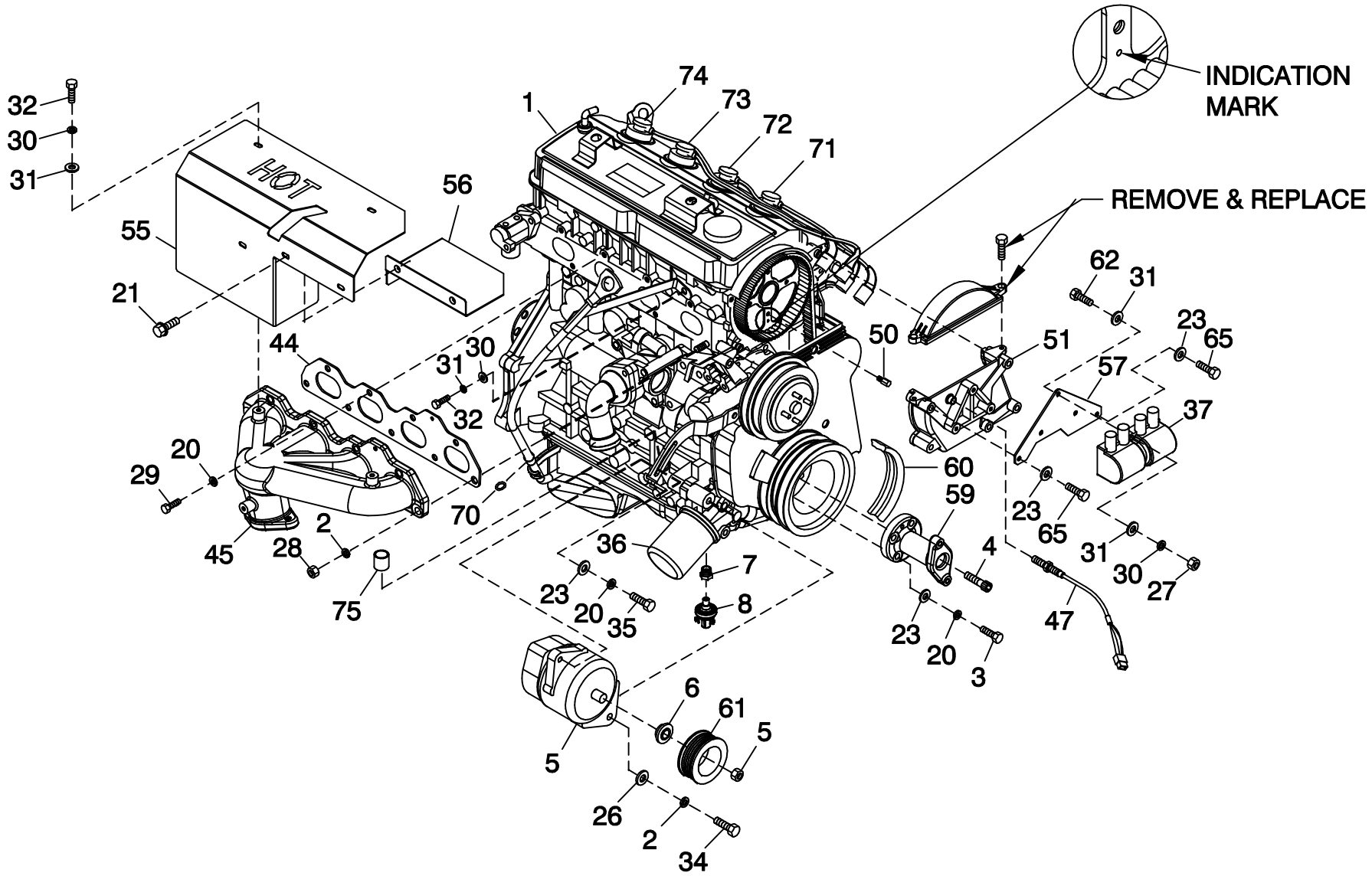

EXPLODED VIEW:
ENG COMMON PARTS 2.4L G2
DRAWING #: 0G1141

THIS PAGE IS LEFT INTENTIONALLY BLANK

GROUP D

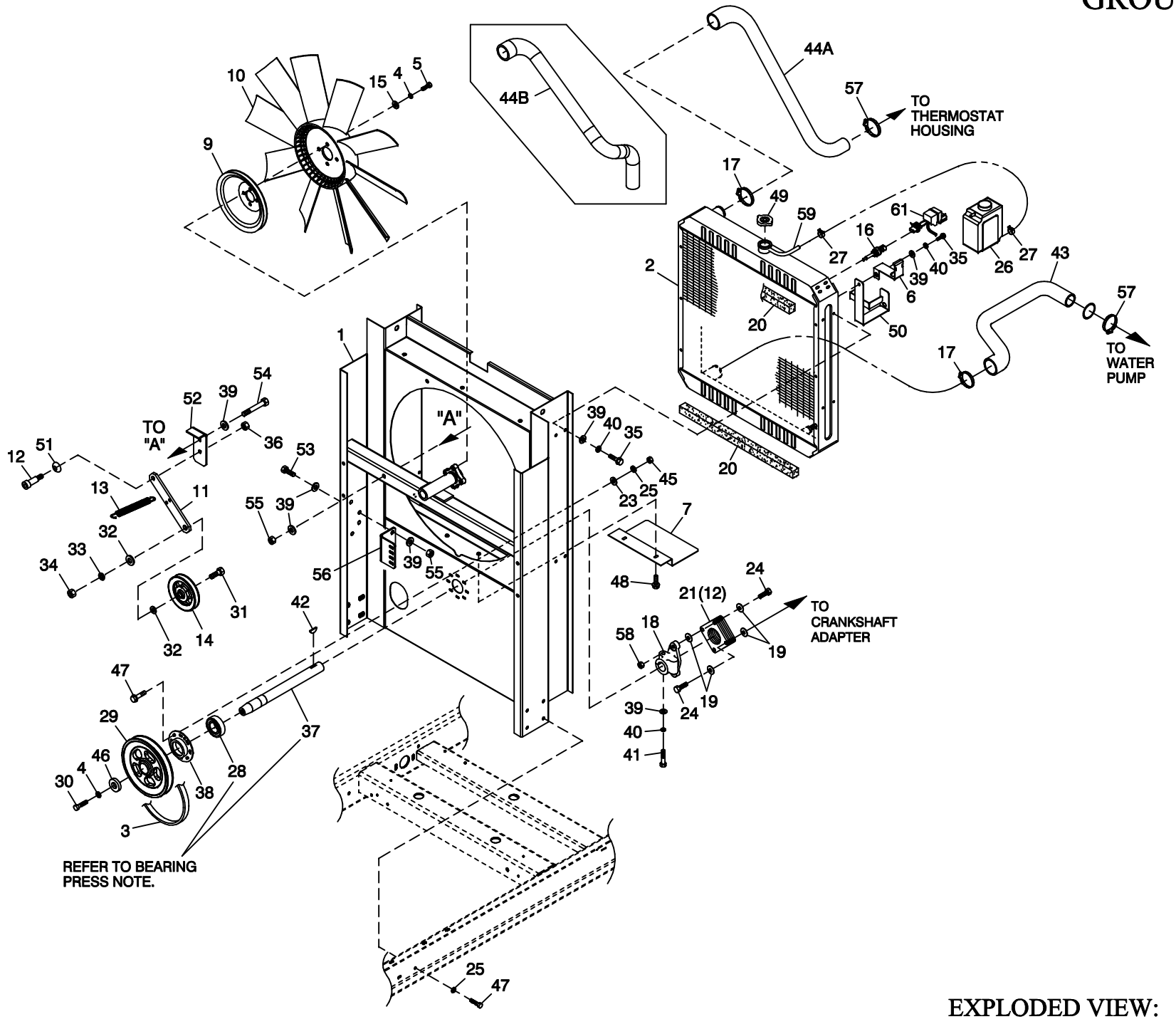

EXPLODED VIEW:
C2 COOLING SYTEM & FAN DRIVE
DRAWING #: 0G1142

REVISION: H-4305-P
DATE: 4/16/09

EXPLODED VIEW: C2 COOLING SYTEM & FAN DRIVE
DRAWING #: 0G1142

GROUP D

APPLICABLE TO:

ITEM	PART #	QTY.	DESCRIPTION
1	0G68030ST03	1	WELDMENT RADIATOR SUPPORT C2
2	0F2608	1	RADIATOR 598 X 568 X 49 CPL RH
3	0F5263	1	V-BELT 31/64" X 57-3/8"
4	046526	5	WASHER LOCK M10
(1) 5	059981	4	SCREW HHC M10-1.5 X 30 G10.9
6	0F2776A	1	BRACKET, SIGNAL CONDITIONER (USED ONLY WITH QTA PRODUCT)
7	0F5050A	1	SHIELD RADIATOR C4
9	0F2573	1	PULLEY FAN V-GROOVE 9"
10	0F4011	1	FAN COOL 22" DIA 10 BLADE LH
11	0G56820ST03	1	FLAT TENSIONER ARM
12	0G2990	1	SHOULDER BOLT 3/8 X 1/2"
13	0F2862	1	SPRING TENSION CPL
14	0F2560	1	PULLEY V-BELT 4" FLANGED
15	022131	4	WASHER FLAT 3/8-M10 ZINC
16	0E2507	1	PROBE COOLANT LEVEL 3/8 NPTF (USE WITH HARNESS P/N 0G4882)
	0H1827	1	PROBE COOLANT LEVEL 3/8-18NPTF (USE WITH HARNESS P/N 0H3069)
17	035685	2	CLAMP HOSE #28 1.32-2.25
18	0F2561	1	HUB FLEX PLATE
19	0C8145	8	WASHER FLEX (THIN)
20	052250	2	TAPE FOAM 1 X 1 (26.75" LG)
21	0C7043	12	DISK FLEX
23	022473	8	WASHER FLAT 1/4-M6 ZINC
(1) 24	0C8146	4	SCREW HHC 5/16-24 X 1.124
25	022097	16	WASHER LOCK M6-1/4
26	076749	1	TANK COOLANT RECOVERY
(2) 27	048031C	2(REF)	CLAMP HOSE BAND 1/4
28	031971	1	BEARING #6205 2NSE C3 E SRI2 S
29	0F4496	1	PULLEY 4.5" DIA MACHINED
(1) 30	042911	1	SCREW HHC M10-1.5 X 30 G8.8
31	0F2872	1	SCREW HHC 1/2-13 X 2" G8
32	022304	2	WASHER FLAT 1/2 ZINC
33	022195	1	WASHER LOCK 1/2
34	022196	1	NUT HEX 1/2-13 STEEL
35	0F8651	9	SCREW HHFC M8-1.25 X 20 W/M6
36	070015	1	NUT HEX LOCK 5/16-18 NY INS SS
37	0F9867	1	SHAFT FAN DRIVE
38	0F2461	1	RETAINER BEARING
39	022145	16	WASHER FLAT 5/16-M8 ZINC
40	022129	10	WASHER LOCK M8-5/16
(1) 41	039287	1	SCREW HHC M8-1.25 X 45 C8.8
42	082774	1	KEY WOODRUFF 4 X 19D
43	0G0795	1	HOSE LOWER RADIATOR G2
44A	0G0816	1	HOSE UPPER RADIATOR G2
44B	0H1546	1	HOSE UPPER RADIATOR G2
45	049813	8	NUT HEX M6 X 1.0 G8 YEL CHR
46	052644	1	SPACER .5 X 1.5 X .25 STL/ZINC
47	0C8566	16	SCREW HHFC M6-1.0 X 20 G8.8
48	0C2454	2	SCREW THF M6-1 X 16 N WA Z/JS
49	090283	1	CAP RADIATOR 13 PSI
50	080713	1	BRACKET COOLANT TANK
51	0G4376	1	WASHER BELLEVILLE .75X.38X.028
52	0G56830ST03	1	TENSIONER ARM SUPPORT BENT 90
53	039253	2	SCREW HHC M8-1.25 X 20 C8.8
54	051698	1	SCREW HHC M8-1.25 X 75 C8.8
55	049820	3	NUT HEX LOCK M8-1.25 NY INS
56	0G67930ST03	1	BRACKET TENSIONER SPRING
57	099502	2	CLAMP HOSE #24 B1.06-2.00
58	0C8165	2	NUT HEX LOCK 5/16-24 NY INS
59	029032	1	HOSE 9/32 ID (27"LG)
(3) 60	029333A	9	TIE WRAP UL 7.4" X .19" BLK (NOT SHOWN)
(3) 61	0H1851	1	ASSY PCB LCL SENSOR (USE WITH I/N 16, P/N 0H1827 ONLY)

BEARING PRESS NOTE:
APPLY LOCTITE 620 BEARING RETAINMENT COMPOUND TO BEARING SURFACE ON ITEM 37 PRIOR TO PRESSING ITEM 28 ONTO ITEM 37.
ALSO APPLY LOCTITE 620 BEARING RETAINMENT COMPOUND TO THE OUTSIDE OF 28 PRIOR TO INSTALLING ITEM 28 INTO ITEM 38.

(1) APPLY MEDIUM STRENGTH BLUE THREAD LOCKING FLUID TO THREADS.

(2) INCLUDED WITH I/N 26.

(3) USE WITH R-PANEL ONLY.

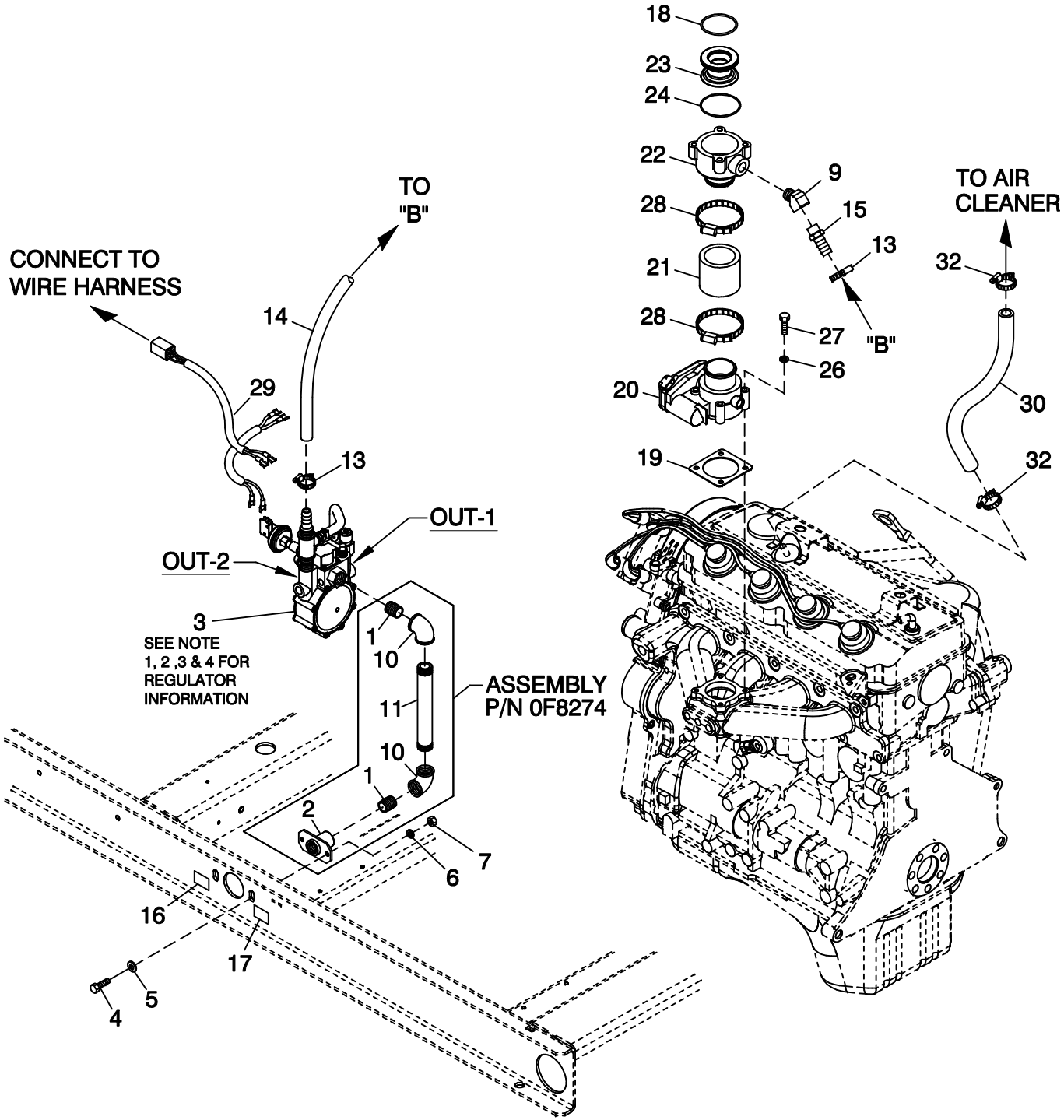

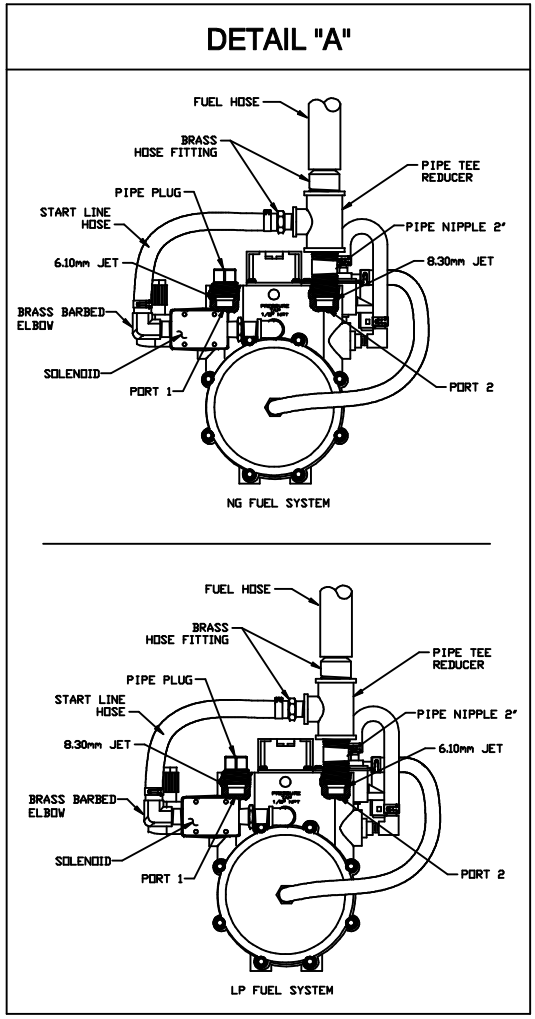

EXPLODED VIEW:
FUEL SYSTEM 2.4L C2 G2
DRAWING #: 0G1151

REVISION: H-0109-C
DATE: 4/19/07

EXPLODED VIEW: FUEL SYSTEM 2.4L C2 G2
DRAWING #: 0G1151

GROUP E

APPLICABLE TO:

ITEM	PART #	QTY.	DESCRIPTION
1	026915	2	NIPPLE CLOSE 3/4 X 1.375
2	075580	1	FLANGE FUEL INLET
3	0F6390C	1	REGULATOR ASSY 2.4L (25KW)
	0F6390B	1	REGULATOR ASSY 2.4L (35KW & 45KW)
4	039253	2	SCREW HHC M8-1.25 X 20 G8.8
5	022145	2	WASHER FLAT 5/16-M8 ZINC
6	022129	2	WASHER LOCK M8-5/16
7	045771	2	NUT HEX M8-1.25 G8 CLEAR ZINC
9	0E8286	1	STREET EL 45D 1/2 NPT BRASS
10	026812	2	ELBOW 90D 3/4 NPT
11	0F8379	1	NIPPLE PIPE 3/4 NPT X 7
13	057823	2	CLAMP HOSE #10 .56 - 1.06
14	059057	1	HOSE 3/4 ID SAE-30R2 (18" LG)
15	047527	1	BARBED STR 1/2 NPT X 3/4
16	0D1509	1	DECAL INLET PRESSURE
17	050279	1	DECAL FUEL INLET NG (NATURAL GAS APPLICATION)
	050280	1	DECAL FUEL INLET LPG (LP VAPOR APPLICATION)
18	0F2119	1	O-RING 45.63 ID X 2.62 WIDTH
19	0E6586	1	GASKET BOSCH 32
20	0E4394	1	ACTUATOR BOSCH 40 GOVERNOR (45KW)
	0E4395	1	ACTUATOR BOSCH 32 GOVERNOR (25 & 35KW)
21	040105	1	HOSE COOL 2 IN ID 20R4 (45KW)
	057753B	1	HOSE 1.5 ID X 2 LG 20R4 (35KW)
22	0G4573C	1	MIXER ACTUATOR 32MM MACHINED (25KW)
	0G4573B	1	MIXER ACTUATOR 40MM MACHINED (35 & 45KW)
23	0F7790E	1	VENTURI THROTTLE 26MM (35 & 45KW)
	0F7790H	1	VENTURI THROTTLE 19MM (25KW)
24	0E7121	1	O-RING 47.625 ID X 2.38 WIDTH
26	022097	4	WASHER LOCK M6-1/4
27	046580	4	SCREW SHC M6-1.0 X 45 G12.9
28	035685	2	CLAMP HOSE #28 1.32-2.25
29	0F6155	1	HARNESS CPL FUEL JUMPER
30	047290	1	HOSE 3/8 ID SINGLE BRAID (18" LG)
32	057823	2	CLAMP HOSE #10 .56-1.06

RECONFIGURING THE FUEL SYSTEM

Note: All models are configured to run on natural gas from the factory.

To reconfigure the fuel system from NG to LP, follow these steps:
1. Turn the main gas supply off.
2. Remove the carburetor fuel hose from the outlet port of the demand regulator (See Detail "A").
3. Disconnect the power wires from the fuel solenoid located on top of the regulator assembly.
4. Loosen the spring clamp on the small fuel enrichment line and remove the hose from the hose barb.
5. Remove the black pipe assembly from the outlet port of the demand regulator.
6. Remove the NG fuel jet (loosen counter clockwise) from the outlet port.
7. Remove the LP fuel jet (loosen counter clockwise) from the jet keeper port on the side of the regulator housing. Install this jet into the outlet port in the regulator casting.

Note: The jet sizes are stamped on the individual jets. The larger jet size is used for running on NG.

8. Install the previously removed NG jet into the jet keeper port on the side of the regulator housing.
9. Install the previously removed black iron pipe onto the outlet port of the demand regulator.
10. Reverse steps 1-4 in this procedure to reactivate the demand regulator.
11. For LP vapor application substitute LPG fuel inlet decal p/n 050280 for NG fuel inlet decal p/n 050279 (Item 17).
12. When switching fuel types, the proper dip switch settings must be made to the control panel. See owners manual, fuel section, for more details.

GROUP F

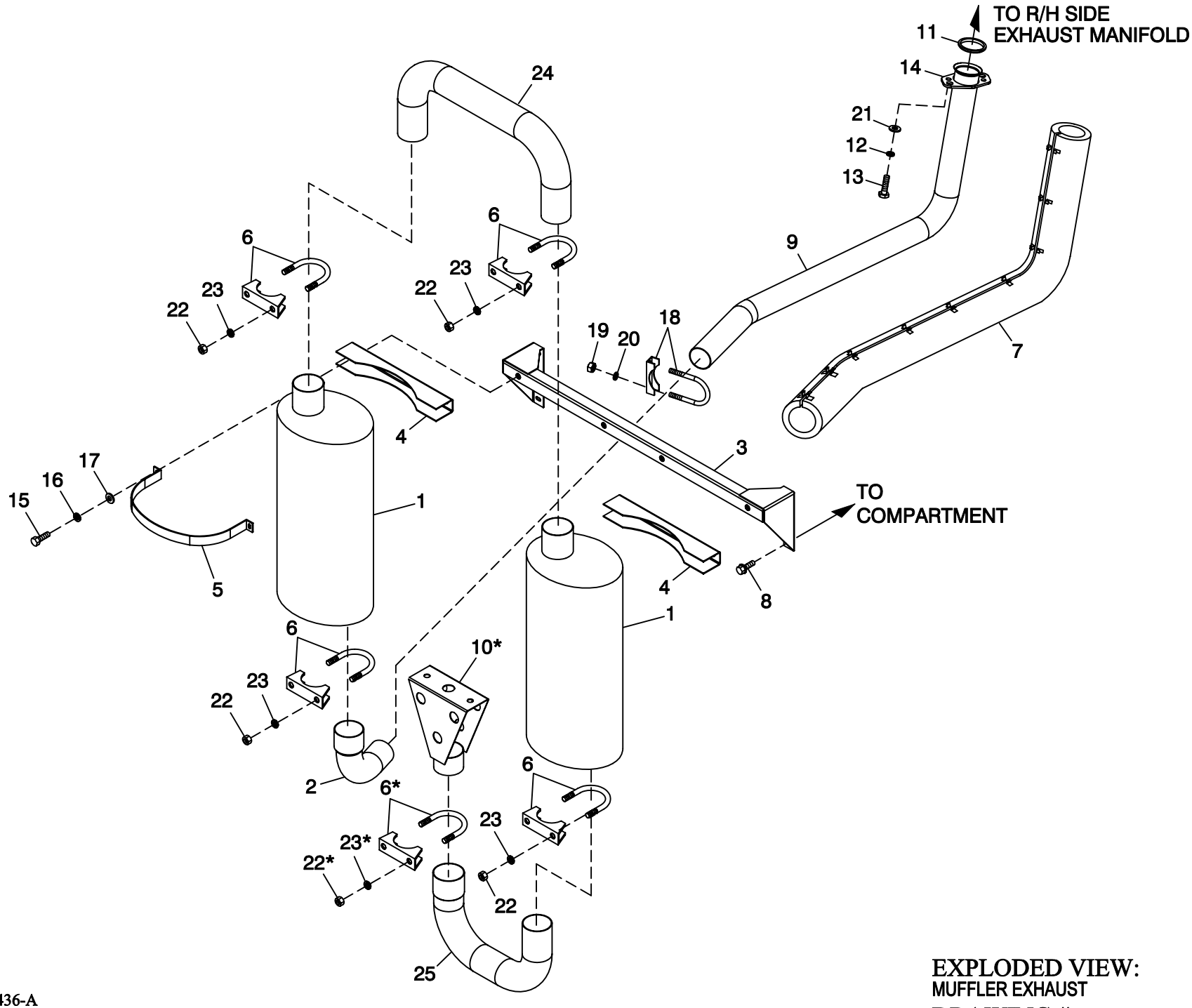

EXPLODED VIEW:
MUFFLER EXHAUST
DRAWING #: 0G1146

REVISION: G-8436-A
DATE: 6/28/06

EXPLODED VIEW: MUFFLER EXHAUST
DRAWING #: 0G1146

GROUP F

APPLICABLE TO:

ITEM	PART #	QTY.	DESCRIPTION
1	0F9794	2	MUFFLER 7" X 9" X 18-1/2" 2" IN/OUT
2	0G0113	1	EXHAUST ELBOW 2 1/4 OD 2 1/2OD
3	0G1007	1	BRACKET MUFFLER
4	0F2830	2	MUFFLER BRACKET STIFFENER
5	0F2962	2	MUFFLER STRAP
6	080762	5	BOLT U 3/8-16 X 2.62
7	0E0170A	1	EXHAUST BLANKET 988MM (C2)
8	0C2454	4	SCREW THF M6-1 X 16 N WA Z/JS
9	0G0776	1	PIPE EXHAUST G2
10	0G0007	1	DIFFUSER EXHAUST WELDMENT
11	044149	1	GASKET EXHAUST RING
12	085917	2	WASHER LOCK 3/8 SS
13	0D2611	2	SCREW HHC 3/8-16 X 1-3/4 SS
14	0E8816	1	EXHAUST FLANGE 2" PIPE
15	049721	4	SCREW HHC M6-1.0 X 35 G8.8 BLK
16	022097	4	WASHER LOCK M6-1/4
17	022473	4	WASHER FLAT 1/4-M6 ZINC
18	036797	1	BOLT U 5/16-18 X 2.25
19	022259	2	NUT HEX 5/16-18 STEEL
20	070006	2	WASHER LOCK M8 SS
21	088775	2	WASHER FLAT 3/8 SS
22	022241	10	NUT HEX 3/8-16 STEEL
23	085917	10	WASHER LOCK 3/8 SS
24	0F2809	1	PIPE EXHAUST CROSSOVER
25	0F2808B	1	PIPE EXHAUST MUFFLER OUT

* NOT USED ON OPEN SET.

GROUP F

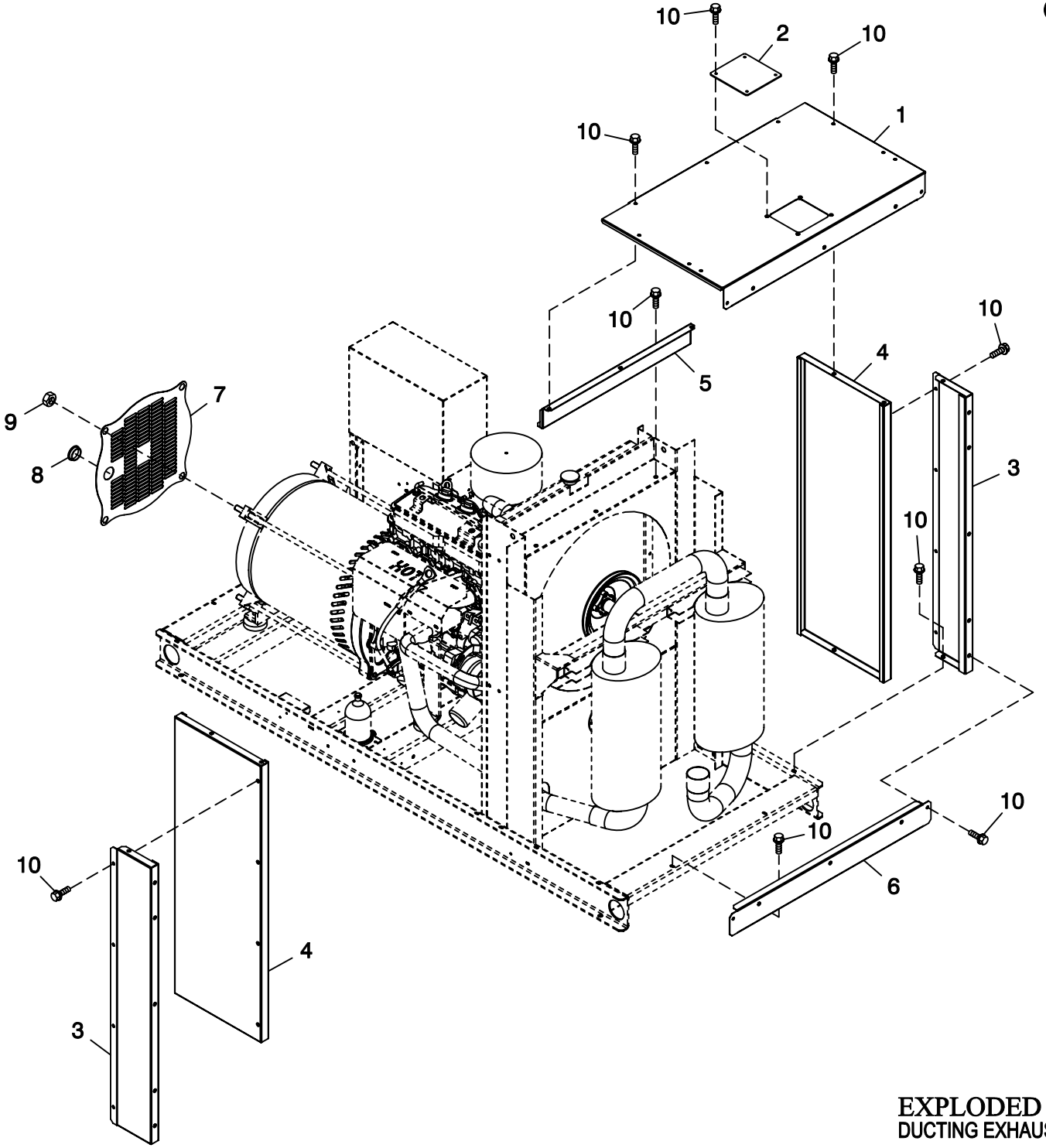

EXPLODED VIEW:
DUCTING EXHAUST (OPEN SET)
DRAWING #: 0G2758

DATE: 7/12/06

EXPLODED VIEW: DUCTING EXHAUST (OPEN SET)
DRAWING #: 0G2758

APPLICABLE TO:

GROUP F

ITEM	PART #	QTY.	DESCRIPTION
1	0G2575	1	PANEL TOP QTA C2
2	0D3215B	1	ACCESS COVER 160 X 170 GALV
3	0G2577	2	PANEL SIDES FRONT QTA C2
4	0G2576	2	PANEL REAR SIDES QTA C2
5	0G2580	1	PANEL TOP MOUNT QTA C2
6	0G2579	1	PANEL LOWER FRONT QTA C2
7	0G2631	1	GUARD REAR ALT
8	023484N	1	BUSHING SNAP SB-2.5-31
9	051779	4	NUT HEX M14-2.0 G8 YEL CHR
10	0C2454	28	SCREW THF M6-1 X 16 N WA Z/JS

GROUP F

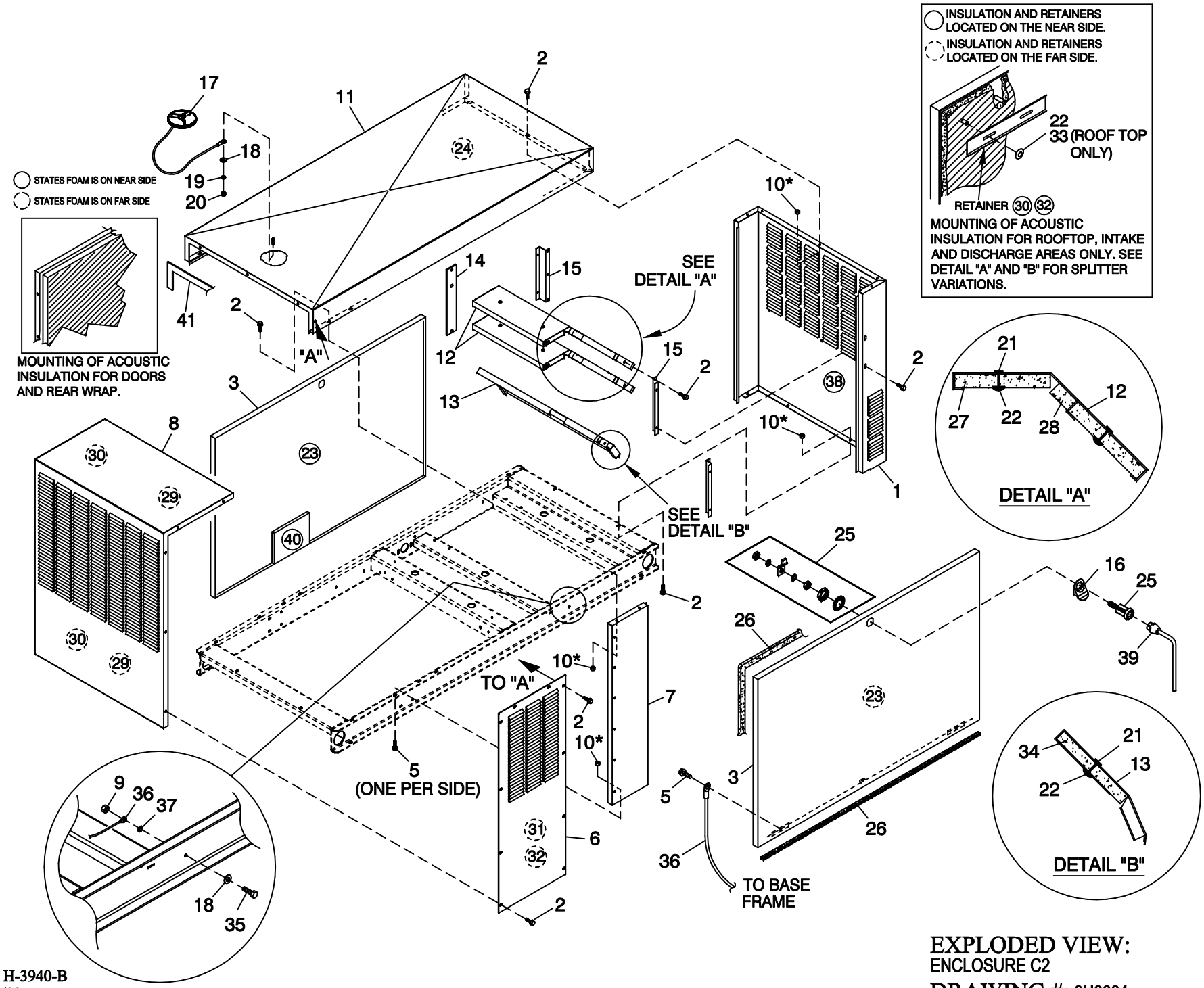

EXPLODED VIEW:
ENCLOSURE C2
DRAWING #: 0H0004

REVISION: H-3940-B
DATE: 2/13/09

EXPLODED VIEW: ENCLOSURE C2
DRAWING #: 0H0004

GROUP F

APPLICABLE TO:

ITEM	PART #	QTY.	DESCRIPTION
(2) 1	0G0045	1	REAR WRAP C2 CPL
2	0C2454	54	SCREW THF M6-1 X 16 N WA Z/JS
(2) 3	0F5849	2	DOOR C2
4	087233	2	RIVET POP .1875 X .450 SS
5	0E3257	4	SCREW TH-FRM M6 W/CAP SHKPRF W
(2) 6	0F5852	2	DISCHARGE DUCT LH & RH SIDE C2
(2) 7	0F9833	2	FRONT CORNERS C2
(2) 8	0F5851	1	DISCHARGE CENTER DUCT C2
9	049813	2	NUT HEX M6 X 1.0 G8 YEL CHR
(1) 10	077992	21	NUT HEX LOCK M6-1.0 SS NY INS
(3) 11	0F9835	1	ROOF C2
12	0F2786	2	SLITTER C4
13	0F2785	1	SPLITTER LOWER C4
14	0F3364	1	SPLITTER STINGER C2
15	0F4880	2	SUPPORT SPLITTER LH C2
16	0F5049	2	TAB PULL
17	0F4487A	1	ASSEMBLY COVER ACCESS
18	022473	3	WASHER FLAT 1/4-M6 ZINC
19	022097	1	WASHER LOCK M6-1/4
20	022127	1	NUT HEX 1/4-20 STEEL
21	0F3072	10	INSULATION RETAINMENT HANGER
22	078115	26	WASHER SELF LOCKING DOME #4-40
23	0G5892	2	INSULATION DOOR C2
24	0G5892A	1	INSULATION ROOF TOP
25	0F5048D	2	VISE-ACTION LATCH SLOTTED CIR
26	0E5968	1	GASKET EXTRUDED TRIM (328" LG)
27	0G5892D	2	INSULATION SPLITTER
28	0G5892C	2	INSULATION SPLITTER
29	0F4051C	2	INSULATION DUCT
30	0F3890B	4	RETAINER INSULATION (820)
31	0F4051B	2	INSULATION DUCT SIDES
32	0F3890	4	RETAINER INSULATION (450)
33	078115A	6	WASHER SELF LOCKING DOME #8-32
34	0G5892E	1	INSULATION LOWER SPLITTER
35	042568	2	SCREW HHC M6-1.0 X 20 G8.8
36	0912970094	2	ASSY WIRE 14 AWG 34.8" GRN/YEL
37	022447	2	WASHER SHAKEPROOF INT 1/4
38	0G5892B	1	INSULATION REAR WRAP
39	0F8869D	1	KEY VISE-ACTION LATCH SLOT CIR
40	0E5298L	1	FOAM 300 X 300 THERMAL ACO (APPLIES TO 4.2L UNITS ONLY)
41	066760	1	STRIP SEALANT 1/8 X 1 (44.52"LG)

(1) ALUMINUM ENCLOSURE NOTE: ALL ENCLOSURE PANELS THAT FASTEN TO THE BASE FRAME MUST BE SECURED USING ITEM 2 & 5 THREAD FORMING FASTENER AND I/N 10 LOCK NUT. LOCK NUT IS TO BE INSTALLED AFTER THREAD FORMING FASTENER HAS PENETRATED THROUGH EXTRUSIONS IN ENCLOSURE PANELS. ALL ROOF PANELS ARE TO BE SECURED IN THE SAME MANNER.

(2) NOTE: PART NUMBER SHOWN IS FOR TAN / STEEL. REFER TO THE SAMPLE GUIDE BELOW FOR AVAILABLE COLOR AND/OR ALUMINUM PART NUMBER FORMAT.

0FXXXXSN = TAN / STEEL
0FXXXXAN = TAN / ALUMINUM
0FXXXXSG = T- GRAY / STEEL
0FXXXXNG = T- GRAY / ALUMINUM
0FXXXX0ST05 = WHITE / STEEL
0FXXXX0AL05 = WHITE / ALUMINUM
0FXXXX0ST13 = BISQUE / STEEL
0FXXXXALT13 = BISQUE / ALUMINUM
0FXXXX0ST14 = GRAY / STEEL
0FXXXXALT14 = GRAY / ALUMINUM

(3) PART NUMBER SHOWN IS FOR TAN. SEE GUIDE BELOW FOR AVAILABLE COLOR AND PART NUMBER FORMAT.

0FXXXXAN = T- GRAY / ALUMINUM
0FXXXX0AL05 = WHITE / ALUMINUM
0FXXXXALT13 = BISQUE / ALUMINUM
0FXXXXALT14 = GRAY / ALUMINUM

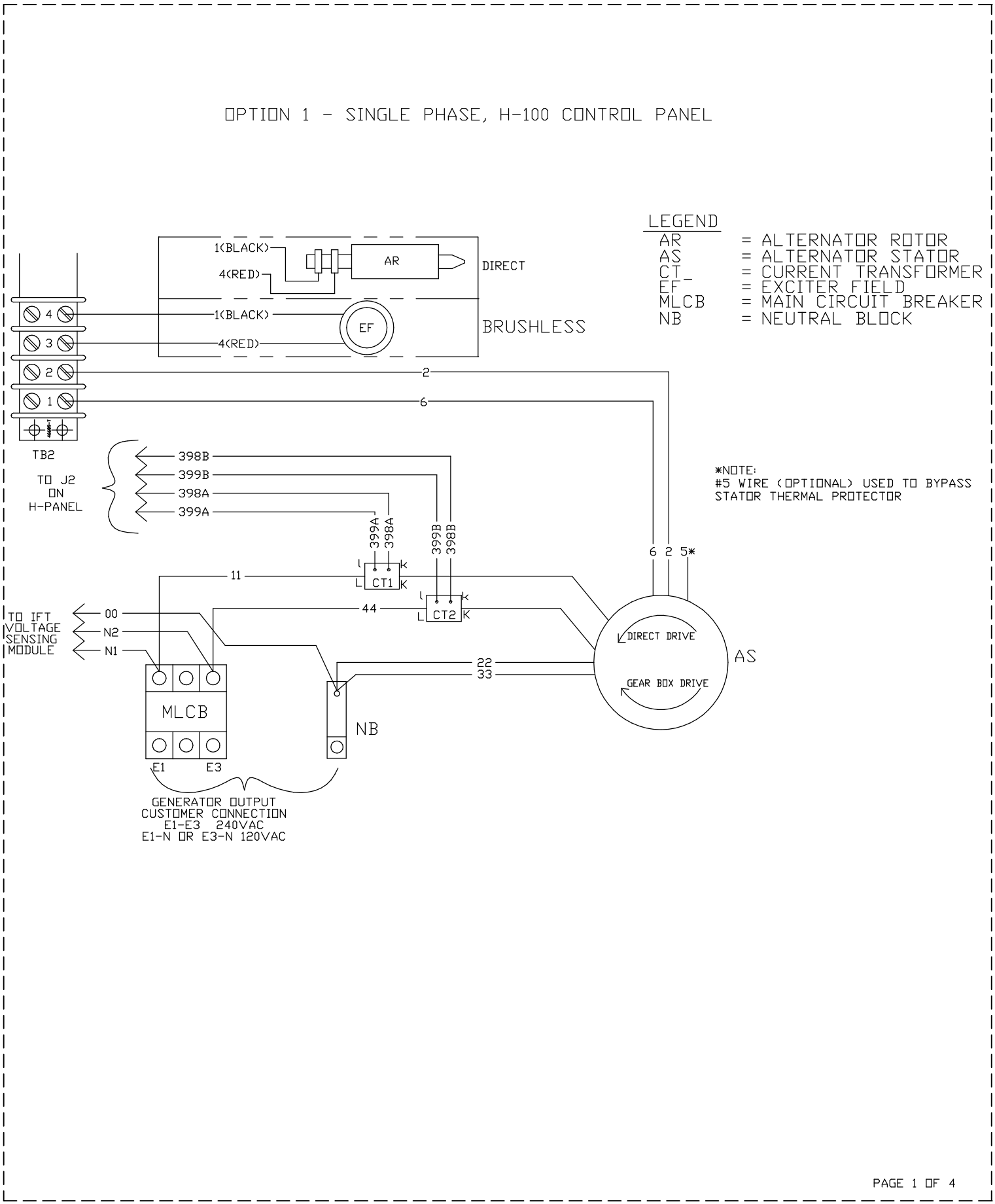

SCHEMATIC - DIAGRAM

REVISION: H-0941-C

CPL H-100 ALTERNATOR

DATE: 8/15/07

DRAWING #: 0F6587

OPTION 2 - THREE PHASE, H-100 CONTROL PANEL DIRECT DRIVE, 6 LEAD

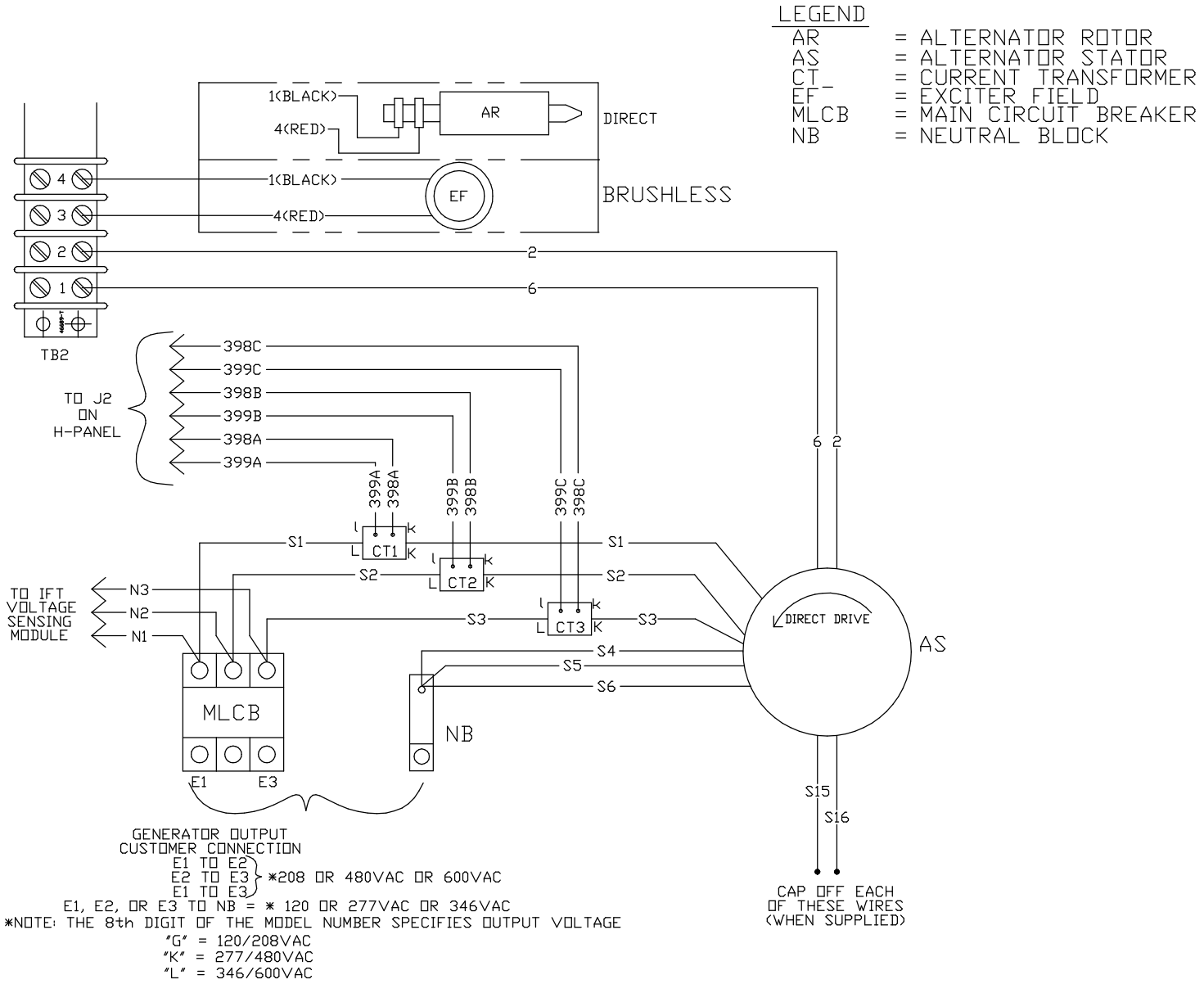

PAGE 2 OF 4

OPTION 3 - THREE PHASE, H-100 CONTROL PANEL GEAR BOX (REVERSE ROTATION)

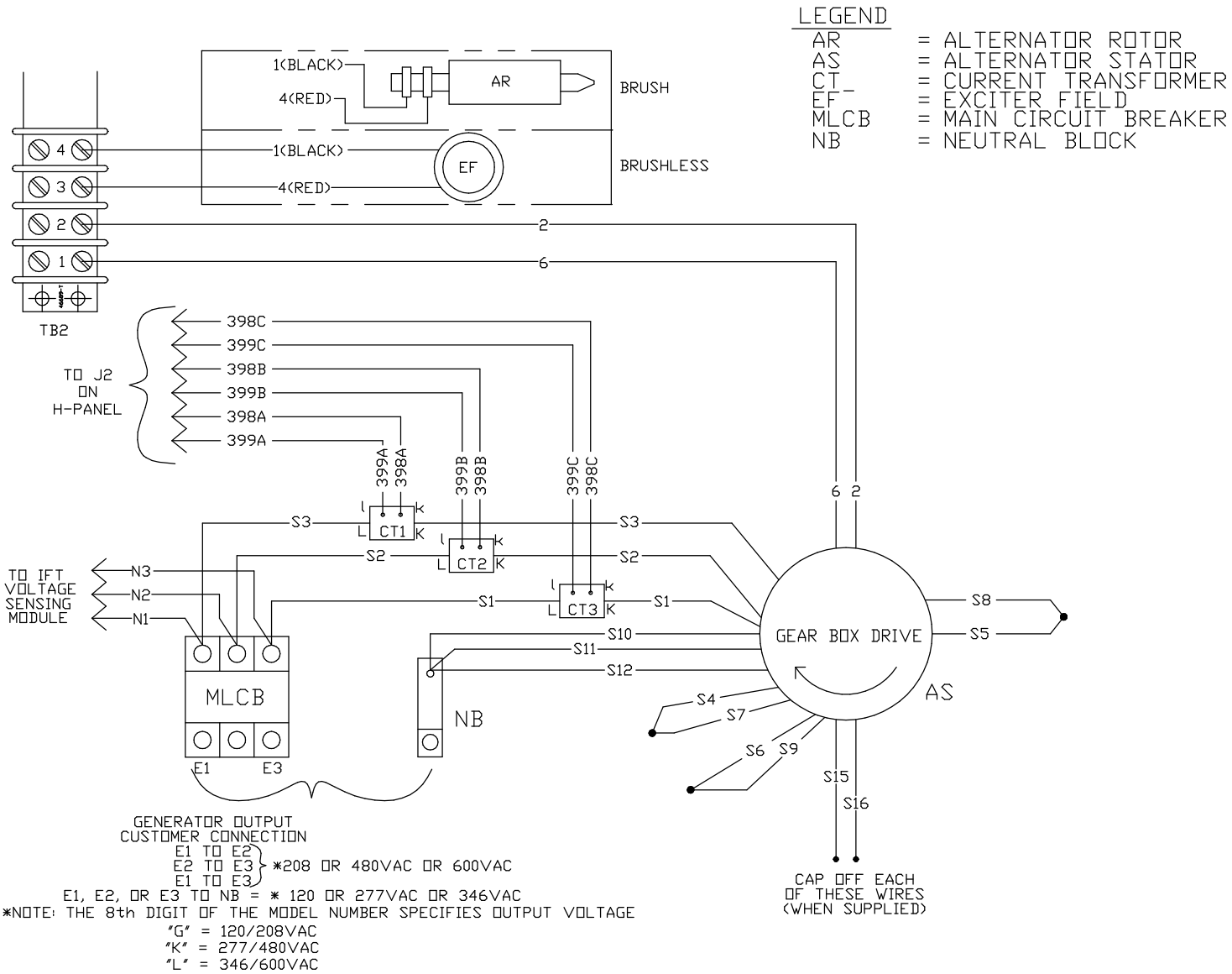

PAGE 3 OF 4

OPTION 4 - THREE PHASE DELTA, H-100 CONTROL PANEL DIRECT DRIVE, 7 LEAD

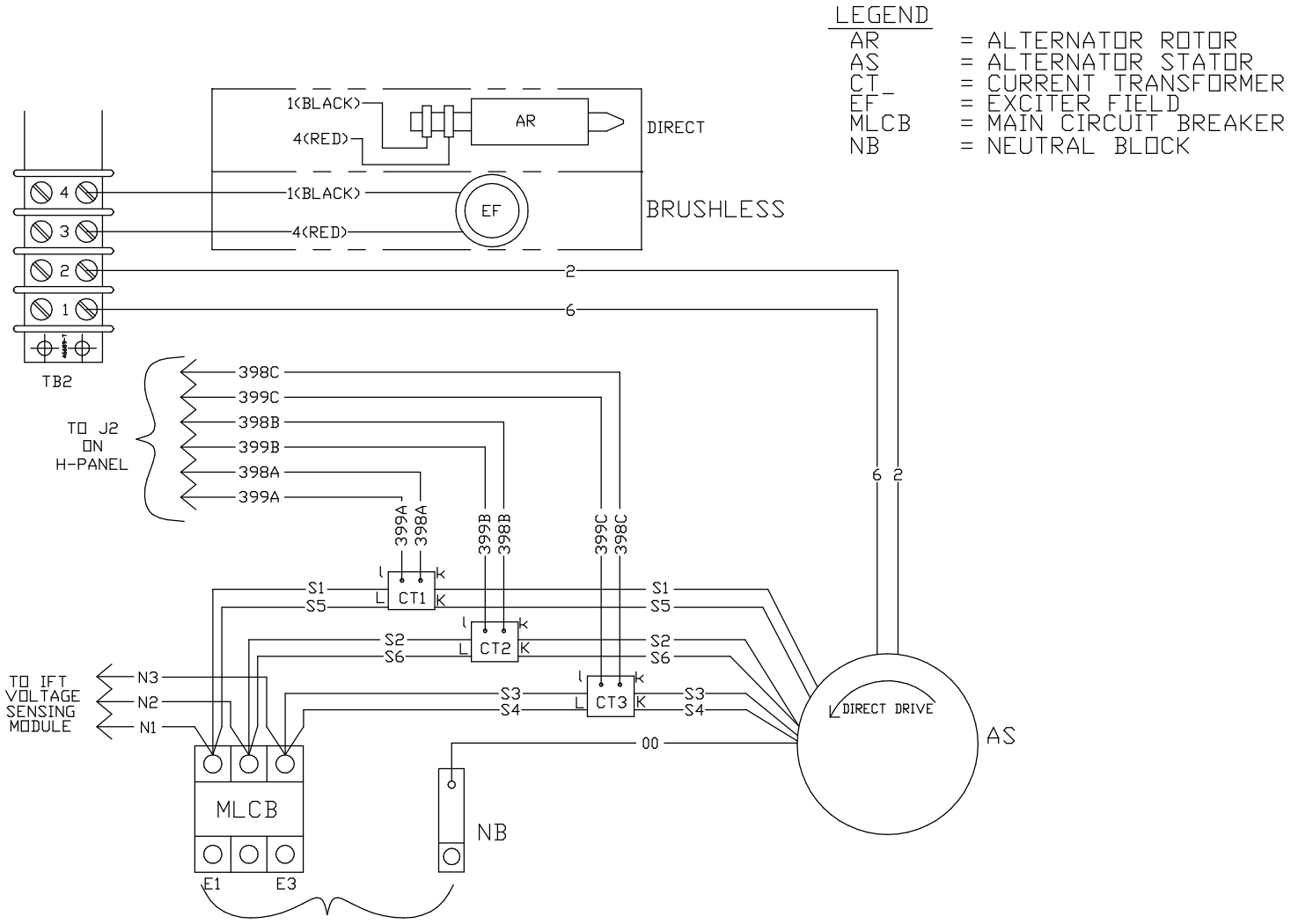

PAGE 4 OF 4

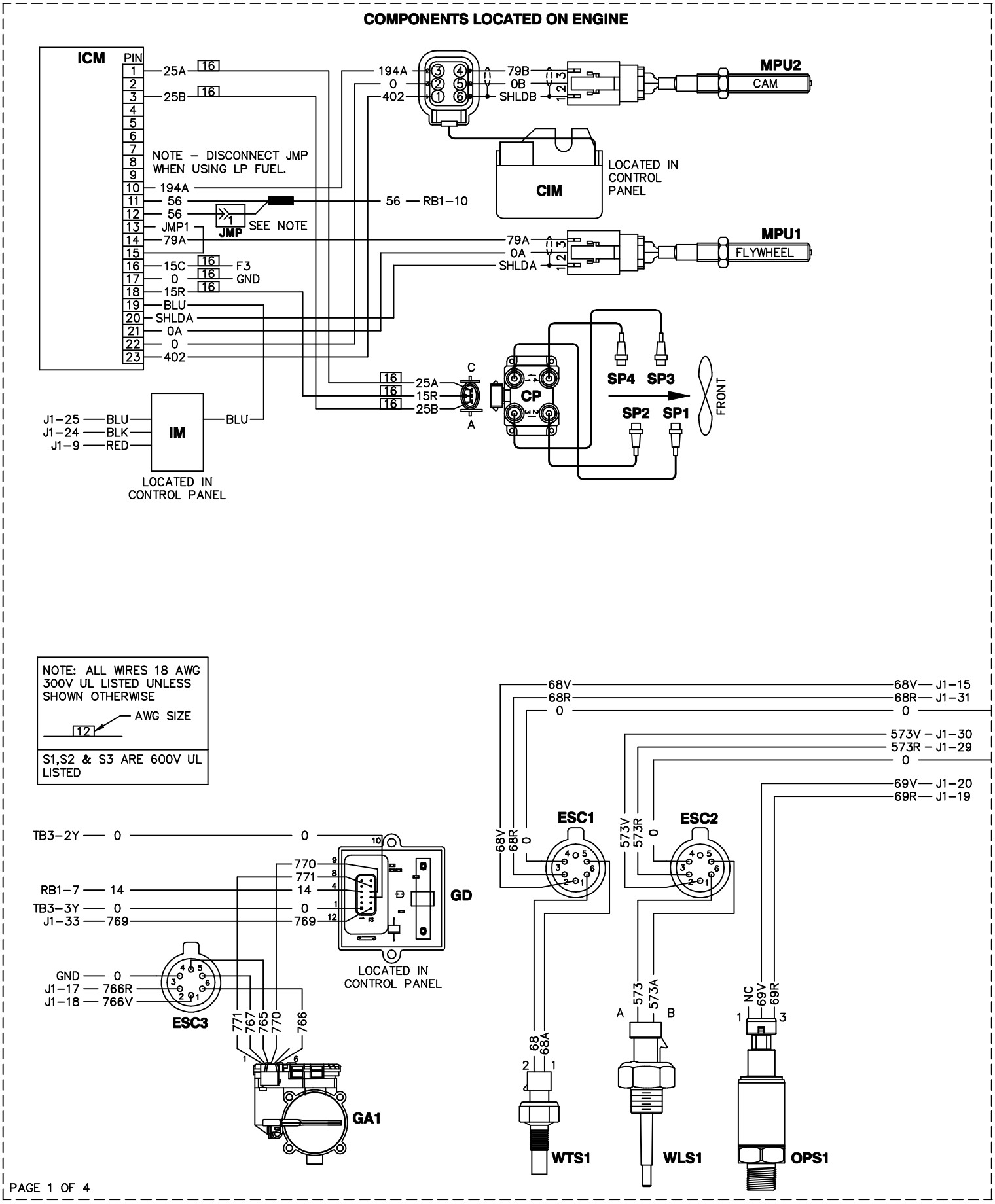
COMPONENTS LOCATED ON ENGINE
ICM
PIN
1 25A 16
2
3 25B 16
4
5
6
7
8
9
10 194A
11 56
12 56
13 JMP1
14 79A
15
16 15C 16 F3
17 0 16 GND
18 15R 16
19 BLU
20 SHLDA
21 0A
22 0
23 402
NOTE – DISCONNECT JMP WHEN USING LP FUEL.
JMP
SEE NOTE
56 — RB1–10
194A
0
402
79B
0B
SHLDB
MPU2
CAM
CIM
LOCATED IN CONTROL PANEL
79A
0A
SHLDA
MPU1
FLYWHEEL
16 25A
16 15R
16 25B
C
A
CP
SP4 SP3
SP2 SP1
FRONT
J1–25 BLU
J1–24 BLK
J1–9 RED
IM
BLU
LOCATED IN CONTROL PANEL
NOTE: ALL WIRES 18 AWG 300V UL LISTED UNLESS SHOWN OTHERWISE
AWG SIZE
12
S1,S2 & S3 ARE 600V UL LISTED
68V
68R
0
68V — J1–15
68R — J1–31
0
573V – J1–30
573R – J1–29
0
69V — J1–20
69R — J1–19
ESC1
ESC2
573V
573R
TB3–2Y 0 0
RB1–7 14 14
TB3–3Y 0 0
J1–33 769 769
770
771
GD
LOCATED IN CONTROL PANEL
GND 0
J1–17 766R
J1–18 766V
ESC3
771
767
765
770
766
GA1
68
68A
WTS1
573
573A
A
B
WLS1
NC
69V
69R
1
3
OPS1
PAGE 1 OF 4

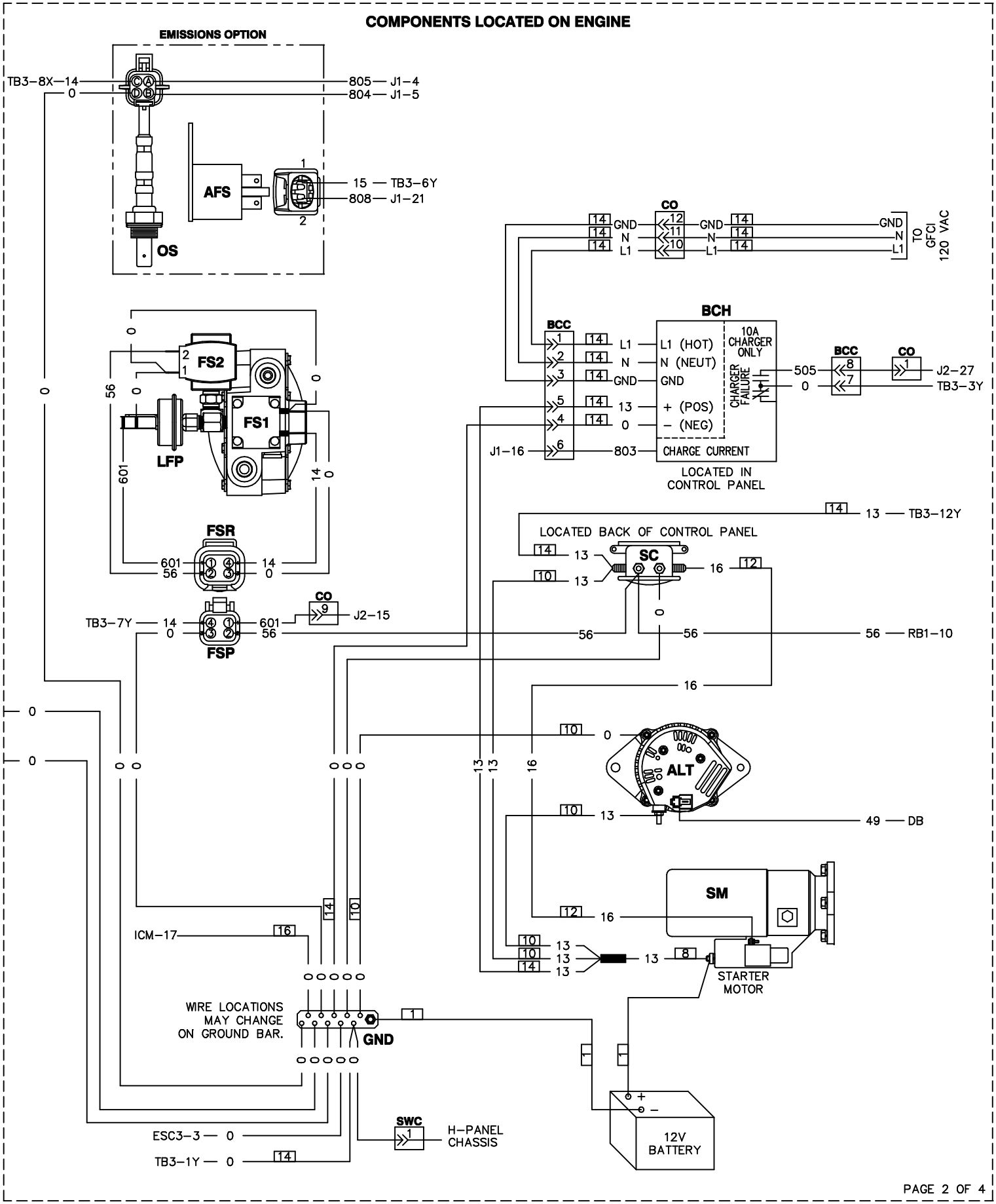

PAGE 2 OF 4

WIRING - DIAGRAM

2.4L IQT

DRAWING #: 0G2402

COMPONENTS LOCATED IN CIRCUIT BREAKER STAND

CONNECTIONS FOR 1Ø UNIT

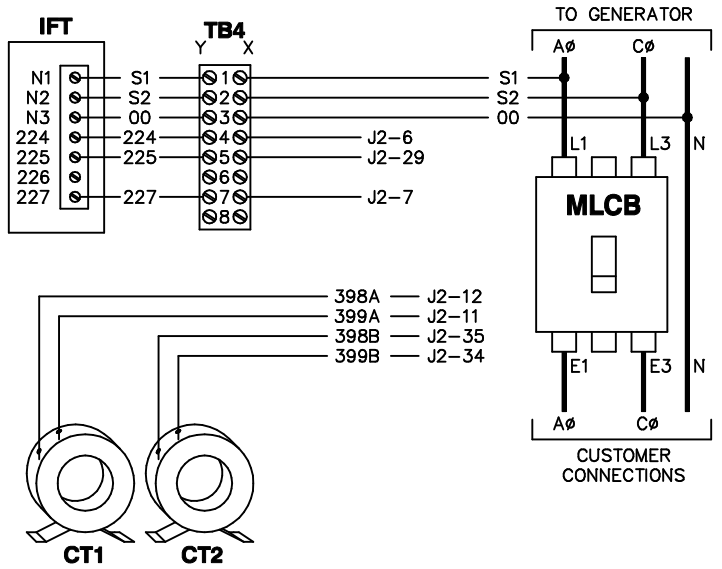

SEE DRAWING 0F8214 FOR CT WIRING.

CONNECTIONS FOR 3Ø UNIT

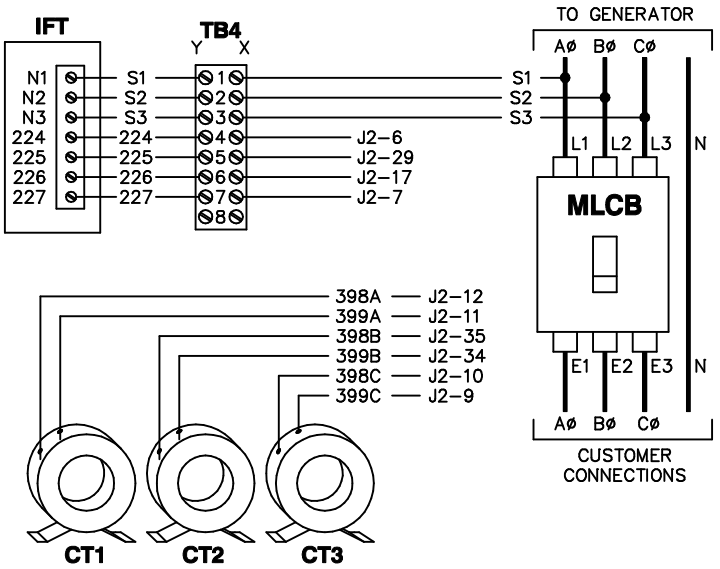

SEE DRAWING 0F8214 FOR CT WIRING.

COMPONENTS LOCATED IN CIRCUIT BREAKER STAND

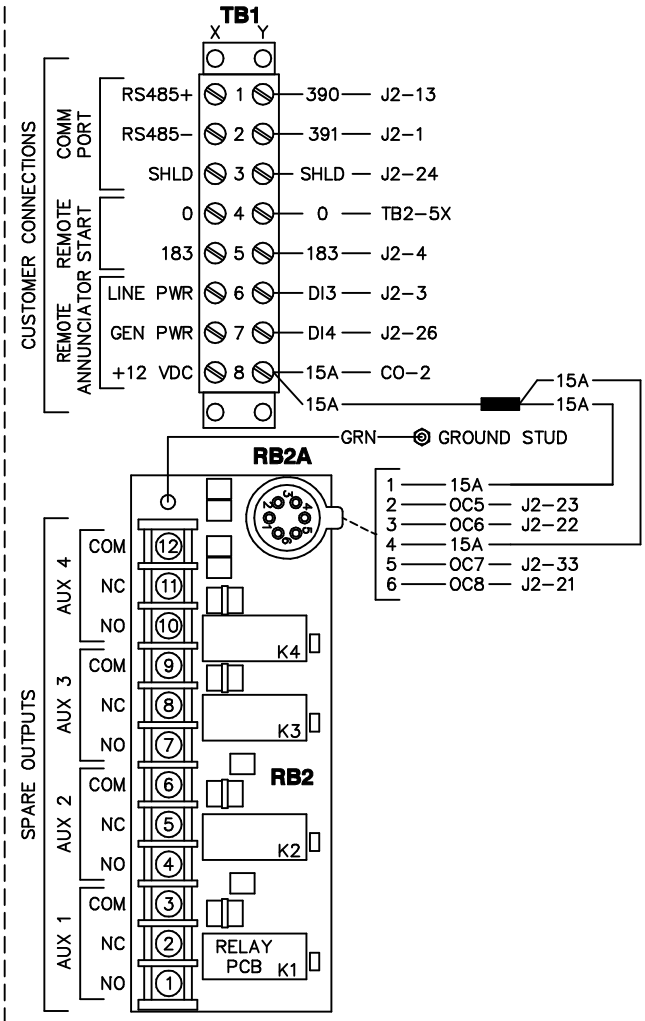

COMPONENTS LOCATED IN EXCITER SHIELD

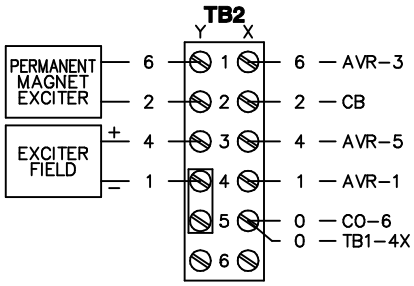

COMPONENTS LOCATED RIGHT SIDE OF ALT. CONN BOX ON THE FRAME RAIL.

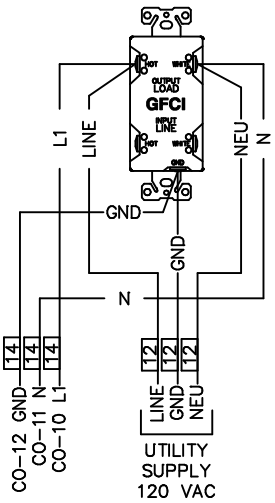

PAGE 3 OF 4

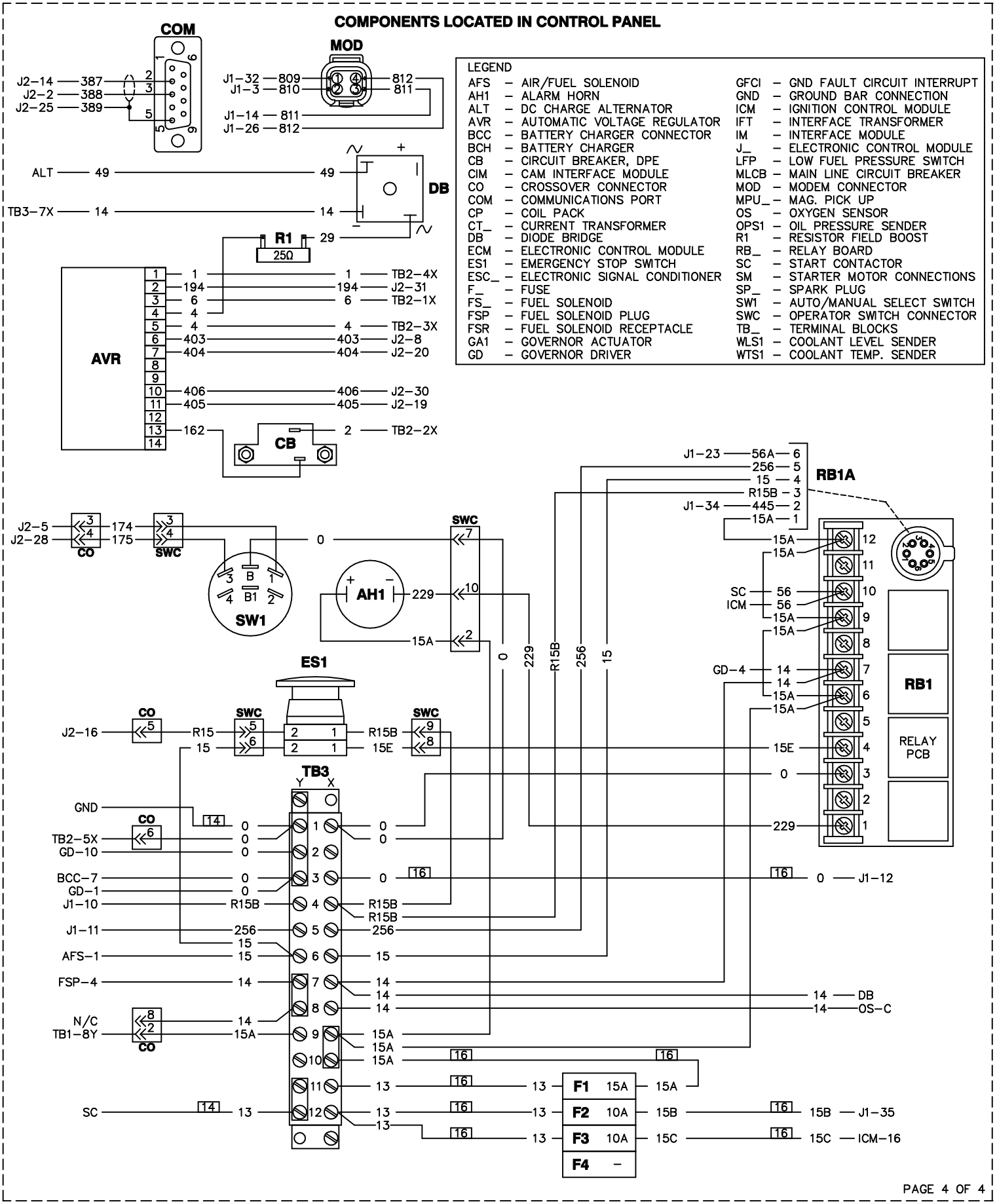
COMPONENTS LOCATED IN CONTROL PANEL
COM
MOD
J2-14 387
J2-2 388
J2-25 389
J1-32 809
J1-3 810
812
811
J1-14 811
J1-26 812
ALT 49
49
DB
TB3-7X 14
14
R1
25Ω
29
AVR
1 1 TB2-4X
2 194 194 J2-31
3 6 6 TB2-1X
4 4
5 4 4 TB2-3X
6 403 403 J2-8
7 404 404 J2-20
10 406 406 J2-30
11 405 405 J2-19
13 162 2 TB2-2X
CB
LEGEND
AFS – AIR/FUEL SOLENOID
AH1 – ALARM HORN
ALT – DC CHARGE ALTERNATOR
AVR – AUTOMATIC VOLTAGE REGULATOR
BCC – BATTERY CHARGER CONNECTOR
BCH – BATTERY CHARGER
CB – CIRCUIT BREAKER, DPE
CIM – CAM INTERFACE MODULE
CO – CROSSOVER CONNECTOR
COM – COMMUNICATIONS PORT
CP – COIL PACK
CT_ – CURRENT TRANSFORMER
DB – DIODE BRIDGE
ECM – ELECTRONIC CONTROL MODULE
ES1 – EMERGENCY STOP SWITCH
ESC_ – ELECTRONIC SIGNAL CONDITIONER
F_ – FUSE
FS_ – FUEL SOLENOID
FSP – FUEL SOLENOID PLUG
FSR – FUEL SOLENOID RECEPTACLE
GA1 – GOVERNOR ACTUATOR
GD – GOVERNOR DRIVER
GFCI – GND FAULT CIRCUIT INTERRUPT
GND – GROUND BAR CONNECTION
ICM – IGNITION CONTROL MODULE
IFT – INTERFACE TRANSFORMER
IM – INTERFACE MODULE
J_ – ELECTRONIC CONTROL MODULE
LFP – LOW FUEL PRESSURE SWITCH
MLCB – MAIN LINE CIRCUIT BREAKER
MOD – MODEM CONNECTOR
MPU_ – MAG. PICK UP
OS – OXYGEN SENSOR
OPS1 – OIL PRESSURE SENDER
R1 – RESISTOR FIELD BOOST
RB_ – RELAY BOARD
SC – START CONTACTOR
SM – STARTER MOTOR CONNECTIONS
SP_ – SPARK PLUG
SW1 – AUTO/MANUAL SELECT SWITCH
SWC – OPERATOR SWITCH CONNECTOR
TB_ – TERMINAL BLOCKS
WLS1 – COOLANT LEVEL SENDER
WTS1 – COOLANT TEMP. SENDER
J2-5 174
J2-28 175
CO
SWC
0
SW1
AH1
229
15A
ES1
J2-16
R15
15
R15B
15E
TB3
GND
TB2-5X
GD-10
BCC-7
GD-1
J1-10
J1-11
AFS-1
FSP-4
N/C
TB1-8Y
SC
J1-23 56A 6
256 5
15 4
R15B 3
J1-34 445 2
15A 1
RB1A
RB1
RELAY PCB
SC 56
ICM 56
GD-4 14
14
0
229
J1-12
DB
OS-C
F1 15A
F2 10A
F3 10A
F4 –
15B J1-35
15C ICM-16
PAGE 4 OF 4

GD CONNECTOR

PIN	WIRE	TO	FUNCTION
1	0	GND	NOTE 1
4	14	RB1–7	NOTE 3
8	771	GA1–1	THROTTLE DRIVE LO
9	770	GA1–4	THROTTLE DRIVE HI
10	0	GND	NOTE 1
12	769	J1–33	THROTTLE PWM

AVR CONNECTOR

PIN	WIRE	TO	FUNCTION
1	1	FIELD	– FIELD
2	194	J2–31	+12VDC
3	6	PME	PME OUTPUT
4	4	R1/FIELD	+ FIELD
5	4	R1/FIELD	+ FIELD
6	403	J2–8	GATE TRIGGER B
7	404	J2–20	GATE TRIGGER A
10	406	J2–30	ZERO CROSSING I/P
11	405	J2–19	GROUND (ISO)
13	162	CB1	PME OUTPUT (AFTER CB)

ICM – IGNITION MODULE CONNECTOR

	PIN	WIRE	TO	FUNCTION
	1	25A	CP–C	IGNITION COIL DRIVE A
	3	25B	CP–A	IGNITION COIL DRIVE B
	10	194A	CIM–3	CIM POWER
	11	56	RB1–10	STARTER RELAY OUT
#	12	56	JMP–1	STARTER RELAY OUT (# SEE NOTE)
	13	JMP1	ICM–15	2.4L ENGINE SEL RETURN
	14	79A	MPU1–3	FLYWHEEL SENSOR +
	15	JMP1	ICM–13	2.4L ENGINE SELECT
	16	15C	F3	NOTE 7
	17	0	GND	NOTE 1
	18	15R	CP–B	IGNITION COIL PWR
	19	BLU	IM	FLYWHEEL SIGNAL OUT
	20	SHLDA	MPU1–1	FLYWHEEL SENSOR DRAIN
	21	0A	MPU1–2	FLYWHEEL SENSOR –
	22	0	CIM–2	CIM PWR RETURN
	23	402	CIM–1	CAM SIGNAL

#NOTE: DISCONNECT JMP WHEN USING LP FUEL.

ENGINE CONTROL MODULE CONNECTIONS

J1

PIN	WIRE	TO	FUNCTION
3	810	MOD–2	MODEM SIGNAL RETURN
4	805	OS–A	OXYGEN SENSOR RTN (OPTION)
5	804	OS–B	OXYGEN SENSOR + (OPTION)
9	RED	IM	+12VDC
10	R15B	RB1A–3/ES1	OVERSPEED/WATCHDOG
11	256	RB1A–5	FUEL RELAY
12	0	GND	NOTE 1
14	811	MOD–3	MODEM DATA CARRIER DETECT
15	68V	ESC1–1	COOLANT TEMP +
16	803	BCH	BAT CHARGER CURRENT
17	766R	ESC3–2	THROTTLE POS RTN
18	766V	ESC3–1	THROTTLE POS +
19	69R	OPS1–3	OIL PRESS RTN
20	69V	OPS1–2	OIL PRESS +
21	808	AFS–2	AIR/FUEL SOLENOID (OPTION)
23	56A	RB1A–6	STARTER RELAY
24	BLK	IM	MPU1 SIGNAL –
25	BLU	IM	MPU1 SIGNAL +
26	812	MOD–4	MODEM ENABLE
29	573R	ESC2–2	COOLANT LVL RTN
30	573V	ESC2–1	COOLANT LVL +
31	68R	ESC1–2	COOLANT TEMP RTN
32	809	MOD–1	MODEM 12V POWER
33	769	GD–12	THROTTLE PWM
34	445	RB1A–2	ALARM RELAY
35	15B	F2	NOTE 6

J2

	PIN	WIRE	TO	FUNCTION
	1	391	CUST CON	RS485– (XFER SW)
	2	388	COM–3	RS232 TX (GENLINK)
	3	DI3	CUST CON	LINE POWER SIGNAL
	4	183	CUST CON	REMOTE START
	5	174	SW1	"AUTO" START
	6	224	IFT	V SENSE GEN A PH
	7	227	IFT	V SENSE RTN
	8	403	AVR–6	AVR GATE TRIGGER B
*	9	399C	CT3	GEN C PH CURRENT –
*	10	398C	CT3	GEN C PH CURRENT +
	11	399A	CT1	GEN A PH CURRENT –
	12	398A	CT1	GEN A PH CURRENT +
	13	390	CUST CON	RS485+ (XFER SW)
	14	387	COM–2	RS232 RX (GENLINK)
	15	601	LFP	LOW FUEL PRESSURE
	16	R15	ES1	EMERGENCY STOP
*	17	226	IFT	V SENSE GEN C PH
	19	405	AVR–11	AVR GROUND
	20	404	AVR–7	AVR GATE TRIGGER A
	21	OC8	RB2A–6	SPARE OUTPUT 4
	22	OC6	RB2A–3	SPARE OUTPUT 2
	23	OC5	RB2A–2	SPARE OUTPUT 1
	24	SHLD	CUST CON	RS485 DRAIN (XFER SW)
	25	389	COM–5	RS232 COM (GENLINK)
	26	DI4	CUST CON	GEN POWER SIGNAL
	27	505	BCH	BAT CHARGER FAIL
	28	175	SW1	"MANUAL" START
	29	225	IFT	V SENSE GEN B PH
	30	406	AVR–10	AVR ZERO CROSSING I/P
	31	194	AVR–2	AVR +12VDC
	33	OC7	RB2A–5	SPARE OUTPUT 3
	34	399B	CT2	GEN B PH CURRENT–
	35	398B	CT2	GEN B PH CURRENT+

* – CONNECTIONS NOT USED IN 1ø UNITS.

NOTES:
1) WIRE# 0 IS CHASSIS GROUND (BATTERY–) UNLESS NOTED OTHERWISE.
2) WIRE# 13 IS UNFUSED +12VDC (BATTERY+)
3) WIRE# 14 IS FUSED +12VDC WHEN GENERATOR IS CRANKING OR RUNNING.
4) WIRE# 15 IS FUSED +12VDC WHEN E–STOP IS NOT ACTIVATED.
5) WIRE# 15A IS FUSED +12VDC FOR GENERAL USE.
6) WIRE# 15B IS FUSED +12VDC FOR THE ENGINE CONTROL MODULE .
7) WIRE# 15C IS FUSED +12VDC FOR THE IGNITION

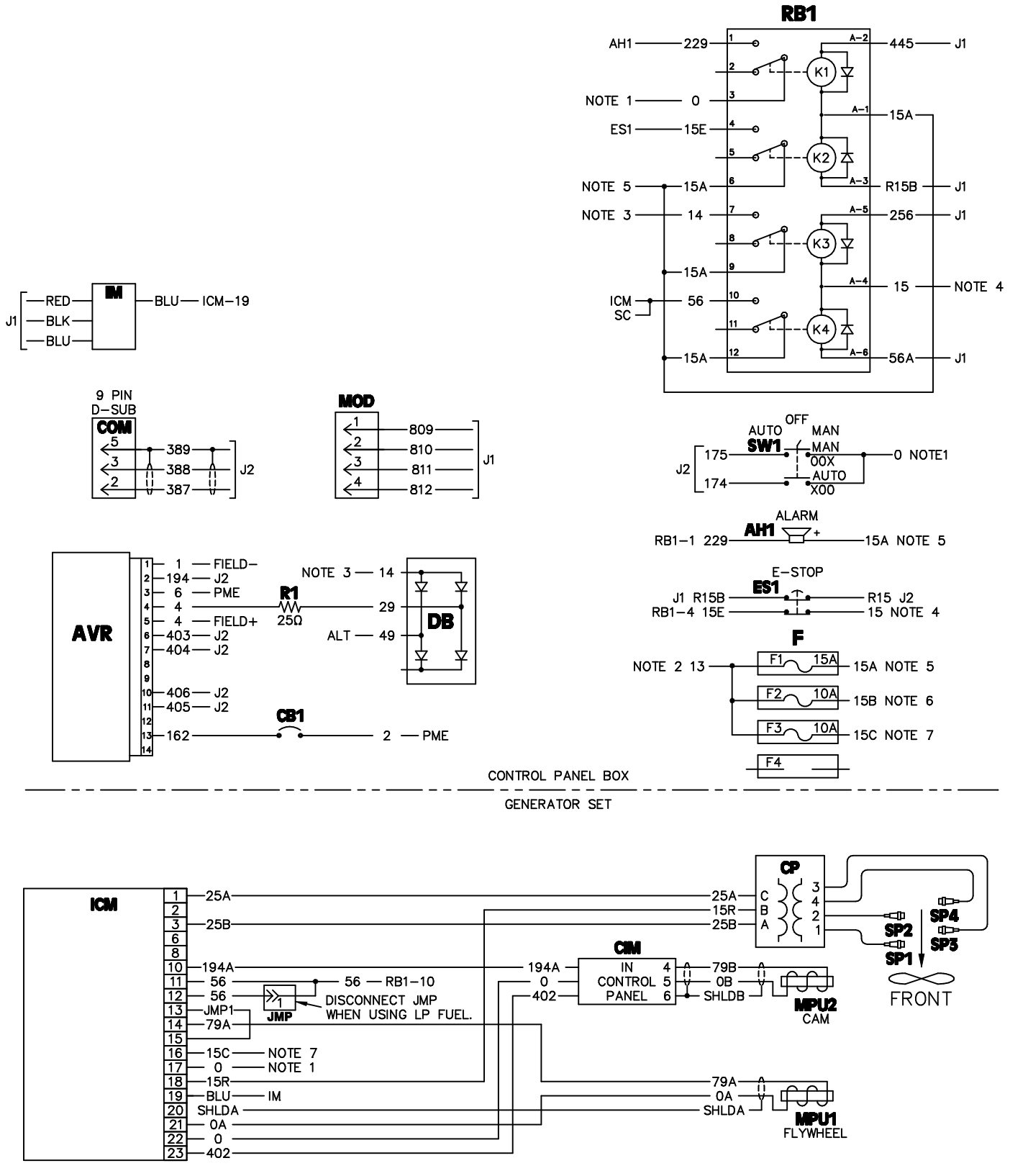

PAGE 2 OF 4

SCHEMATIC - DIAGRAM

2.4L IQT

REVISION: H-1436-C

DATE: 11/16/07

DRAWING #: 0G2403

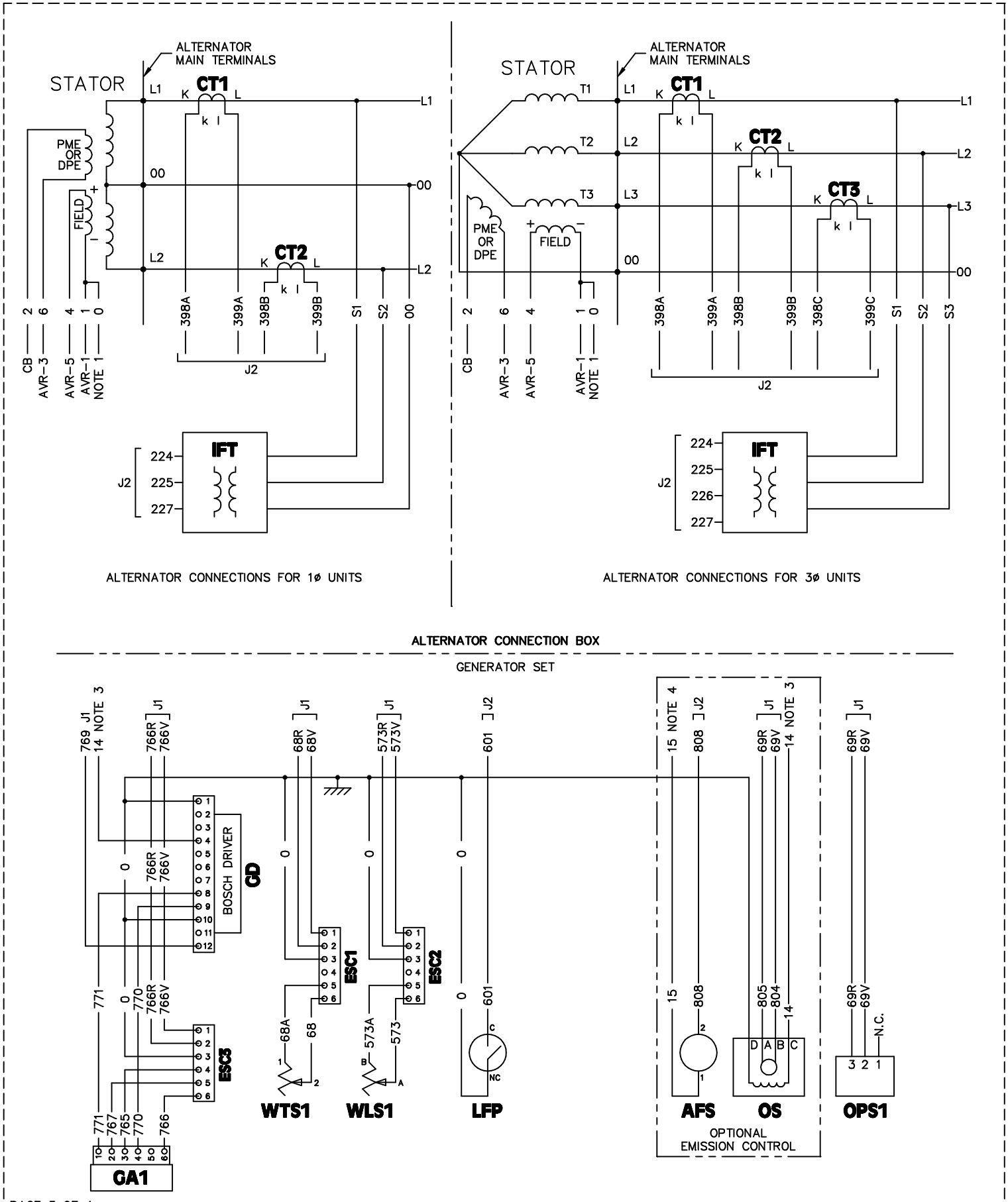

PAGE 3 OF 4

SCHEMATIC - DIAGRAM

2.4L IQT

REVISION: H-1436-C

DATE: 11/16/07

DRAWING #: 0G2403

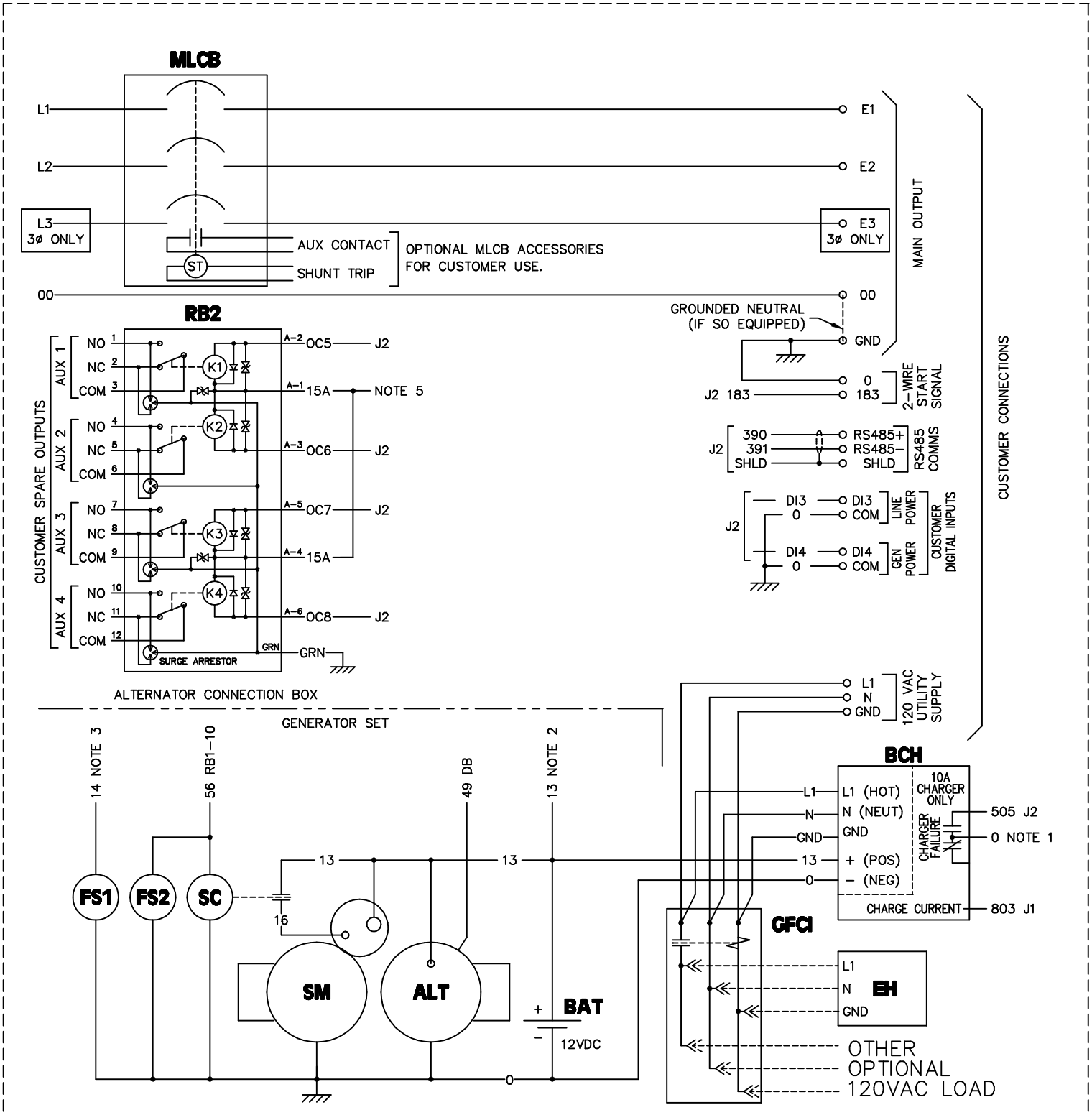

LEGEND

00 – NEUTRAL	CP – COIL PACK	ICM – IGNITION CONTROL MODULE	RB_ – RELAY BOARD
AFS – AIR/FUEL SOLENOID	CT_ – CURRENT TRANSFORMER	IFT – INTERFACE TRANSFORMER	SC – STARTER CONTACTOR
AH1 – ALARM HORN	DB – DIODE BRIDGE	IM – INTERFACE MODULE	SHLD – SHIELD
ALT – CHARGE ALTERNATOR	EH – ENGINE BLOCK HEATER	J_ – ENGINE CONTROLLER CONNECTIONS	SM – STARTER MOTOR
AVR – AUTOMATIC VOLTAGE REGULATOR	ES1 – E-STOP SWITCH	LFP – LOW FUEL PRESSURE	SP_ – SPARK PLUG
BAT – BATTERY	ESC_ – ELECT. SIGNAL CONITIONER	MLCB – MAIN LINE CIRCUIT BREAKER	ST – SHUNT TRIP
BCH – BATTERY CHARGER	F_ – FUSE	MPU_ – MAGNETIC PICK-UP	SW1 – AUTO/MANUAL SWITCH
CB_ – CIRCUIT BREAKER	FS_ – FUEL SOLENOID	OS – OXYGEN SENSOR	WLS_ – WATER LEVEL SENSOR
CIM – CAM INTERFACE MODULE	GA1 – GOVERNOR ACTUATOR	OPS_ – OIL PRESSURE SENDER	WTS_ – WATER TEMPERATURE SENDER
COM – COMMUNICATION CONNECTOR	GD – GOVERNOR DRIVER	PME – PERMANENT MAGNET EXCITER	
	GFCI – GND FAULT CIRCUIT INTERRUPT	R_ – RESISTOR	

SCHEMATIC - DIAGRAM

2.4L IQT

REVISION: H-1436-C

DATE: 11/16/07

DRAWING #: 0G2403

GROUP G

WEIGHT DATA
2.4L 25 KW 642KG (1414 LB)
WOODEN SHIPPING SKIDS INCREASE OVERALL WEIGHT - 42KG (98 LB)

NOTES:

1) MINIMUM RECOMMENDED CONCRETE PAD SIZE: 1155 (45.5") WIDE X 2255 (88.8") LONG. REFERENCE INSTALLATION GUIDE SUPPLIED WITH UNIT FOR CONCRETE PAD GUIDELINES.

2) ALLOW SUFFICIENT ROOM ON ALL SIDES OF THE GENERATOR FOR MAINTENANCE AND SERVICING. THIS UNIT MUST BE INSTALLED IN ACCORDANCE WITH CURRENT APPLICABLE NFPA 37 AND NFPA 70 STANDARDS AS WELL AS ANY OTHER FEDERAL, STATE AND LOCAL CODES FOR MINIMUM DISTANCES FROM OTHER STRUCTURES.

3) CIRCUIT BREAKER INFORMATION:
SEE SPECIFICATION SHEET WITHIN OWNERS MANUAL

4) INSIDE STUB-UP AREA FOR AC LOAD LEAD CONDUIT CONNECTION, NEUTRAL CONNECTION, BATTERY CHARGER 120 VOLT AC (.5 AMP MAX.) CONNECTION, AND ACCESS TO TRANSFER SWITCH CONTROL WIRES. REMOVE FRONT COVER FOR ACCESS.

4A) FIELD CUT HOLE IS ONLY REQUIRED FOR MOUNTING OF GENERATOR ON AN EXISTING PAD.

5) REFERENCE OWNERS MANUAL FOR LIFTING WARNINGS.

6) REMOVE EITHER LEFT OR RIGHT HAND SIDE PANEL TO ACCESS EXHAUST MUFFLER AND FAN BELT.

7) INSIDE ACCESS TO 120VAC, 20A GFCI OUTLET PREWIRED TO SUPPLY POWER TO BATTERY CHARGER. USE 20A GFCI OUTLET FOR ENGINE BLOCK HEATER.

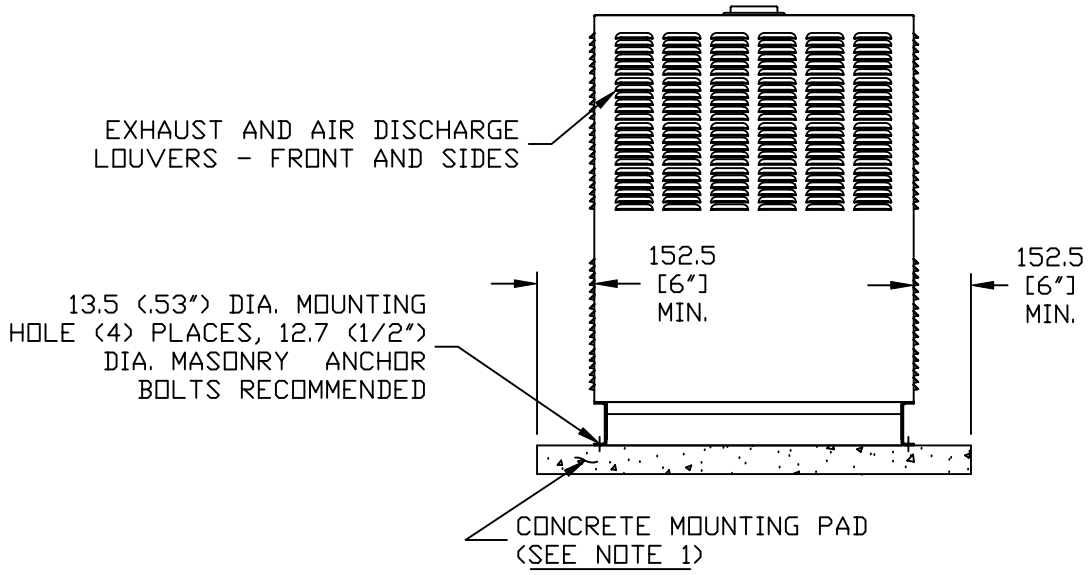

FRONT VIEW

EXPLODED VIEW:
INSTALLATION DRAWING 2.4L 25 KW IND
DRAWING #: 0G2574

REVISION:
DATE: 6/21/06

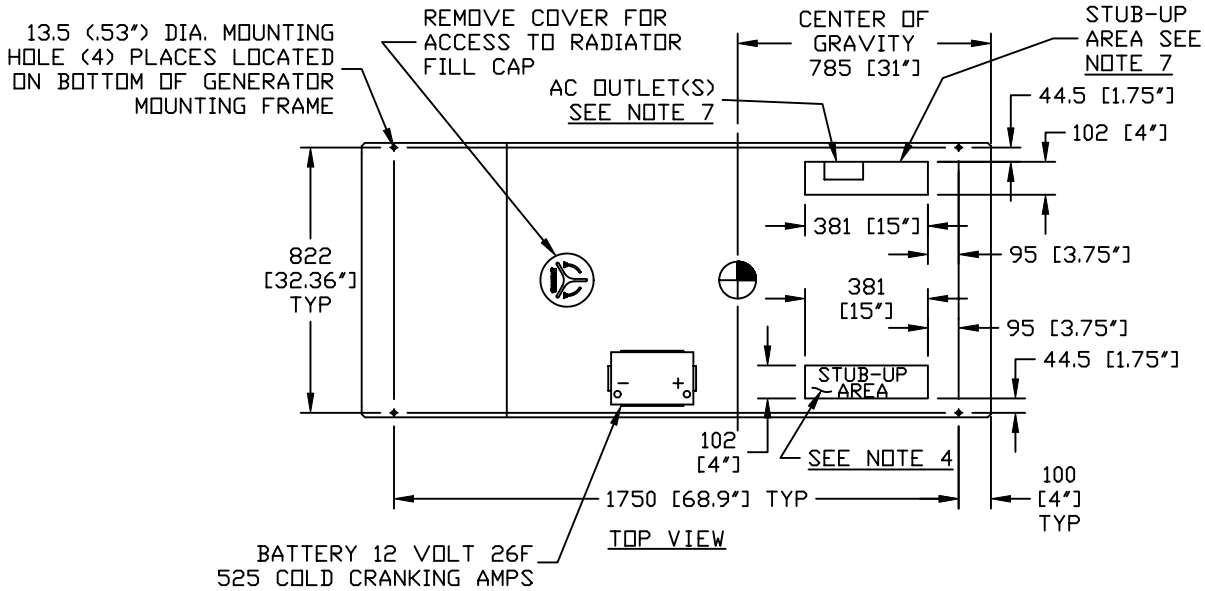

SERVICE ITEM ACCESSIBILITY CHART

SERVICE ITEM	2.4L
OIL FILL CAP	EITHER DOOR
OIL DIP STICK	THRU RIGHT DOOR
OIL FILTER	THRU RIGHT DOOR
OIL DRAIN HOSE	THRU RIGHT DOOR
RADIATOR DRAIN HOSE	THRU LEFT DOOR
AIR CLEANER ELEMENT	EITHER DOOR
SPARK PLUGS	THRU RIGHT DOOR
MUFFLER	SEE NOTE 6
FAN BELT	SEE NOTE 6
BATTERY	THRU LEFT DOOR
AC OUTLET(S)	THRU RIGHT REAR DOOR

REFERENCE OWNERS MANUAL FOR PERIODIC REPLACEMENT PART LISTINGS

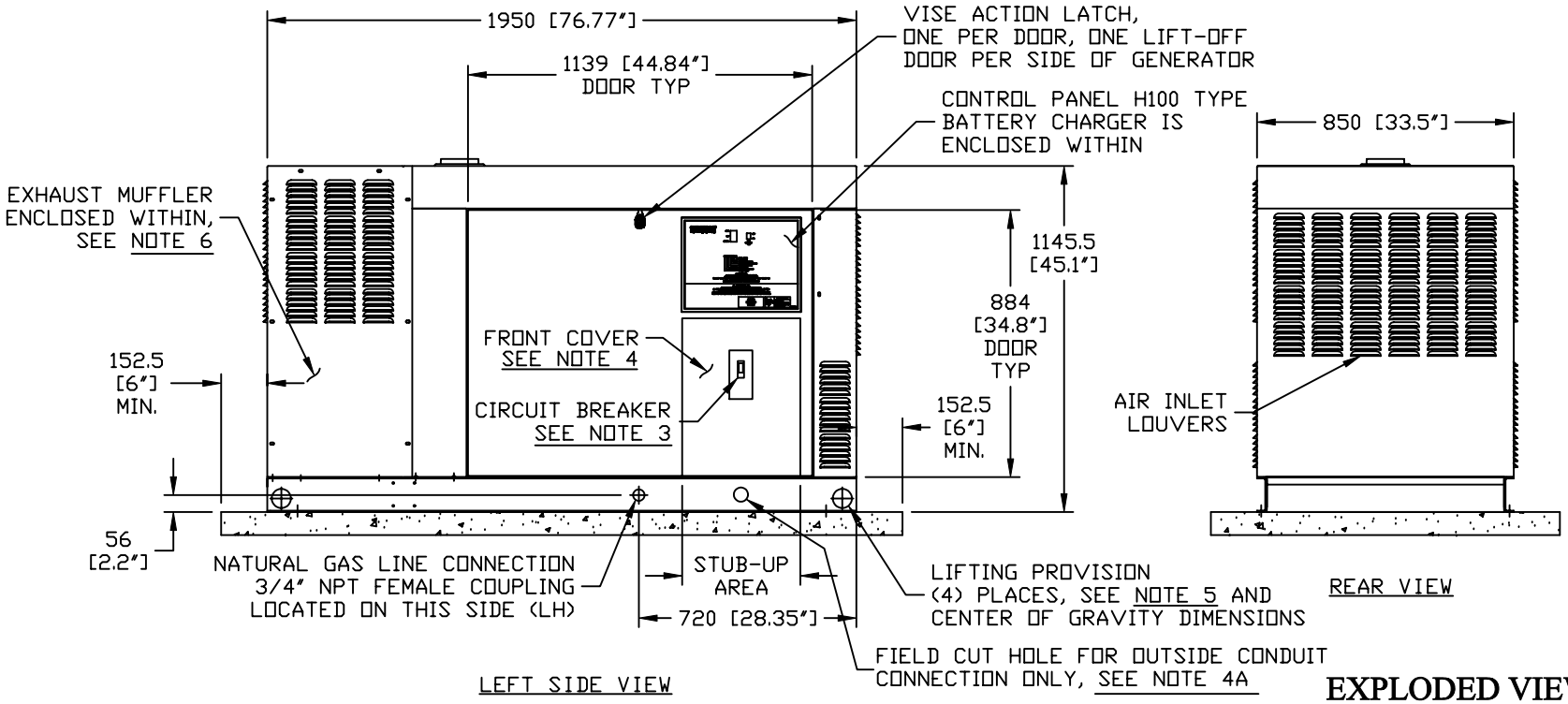

EXPLODED VIEW:
INSTALLATION DRAWING 2.4L 25 KW IND
DRAWING #: 0G2574

REVISION:
DATE: 6/21/06

GROUP G

NOTES:

1) MINIMUM RECOMMENDED CONCRETE PAD SIZE: 1155 (45.5") WIDE X 2255 (88.8") LONG.

2) ALLOW SUFFICIENT ROOM ON ALL SIDES OF THE GENERATOR FOR MAINTENANCE AND SERVICING. THIS UNIT MUST BE INSTALLED IN ACCORDANCE WITH CURRENT APPLICABLE NFPA 37 AND NFPA 70 STANDARDS AS WELL AS ANY OTHER FEDERAL, STATE AND LOCAL CODES FOR MINIMUM DISTANCES FROM OTHER STRUCTURES.

3) CIRCUIT BREAKER INFORMATION:
SEE SPECIFICATION SHEET WITHIN OWNERS MANUAL.

4) INSIDE STUB-UP AREA FOR AC LOAD LEAD CONDUIT CONNECTION, NEUTRAL CONNECTION, AUXILARY OUTPUT RELAYS, AND ACCESS TO TRANSFER SWITCH CONTROL WIRES. REMOVE COVER FOR ACCESS.

4A) FIELD CUT HOLE IS ONLY REQUIRED FOR MOUNTING OF GENERATOR ON AN EXISTING PAD.

5) REFERENCE OWNERS MANUAL FOR LIFTING WARNINGS.

6) REMOVE EITHER LEFT OR RIGHT HAND SIDE PANEL TO ACCESS EXHAUST MUFFLERS.

7) INSIDE ACCESS TO 120VAC, 20A GFCI OUTLET PREWIRED TO SUPPLY POWER TO BATTERY CHARGER.
USE 20A GFCI OUTLET FOR ENG BLOCK HEATER.

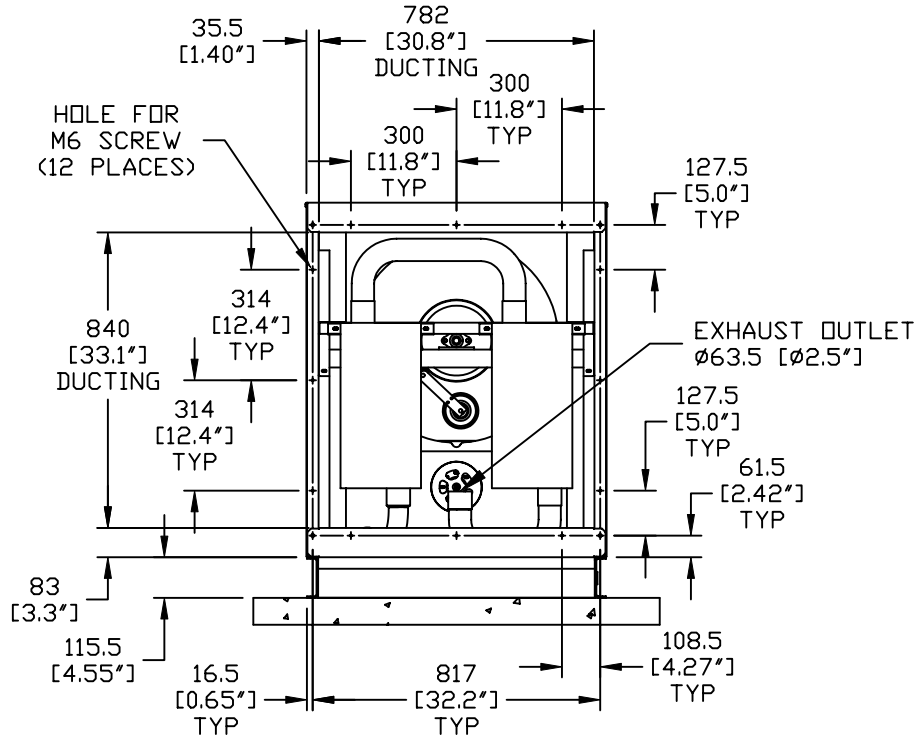

FRONT VIEW

WEIGHT DATA
2.4L 25KW 528KG (1,163 LB)
WOODEN SHIPPING SKIDS INCREASE OVERALL WEIGHT 42KG (98LB)

EXPLODED VIEW:
INSTALL 2.4L IND C2 OPEN
DRAWING #: 0G2833

REVISION: G-9690-B
DATE: 2/21/07

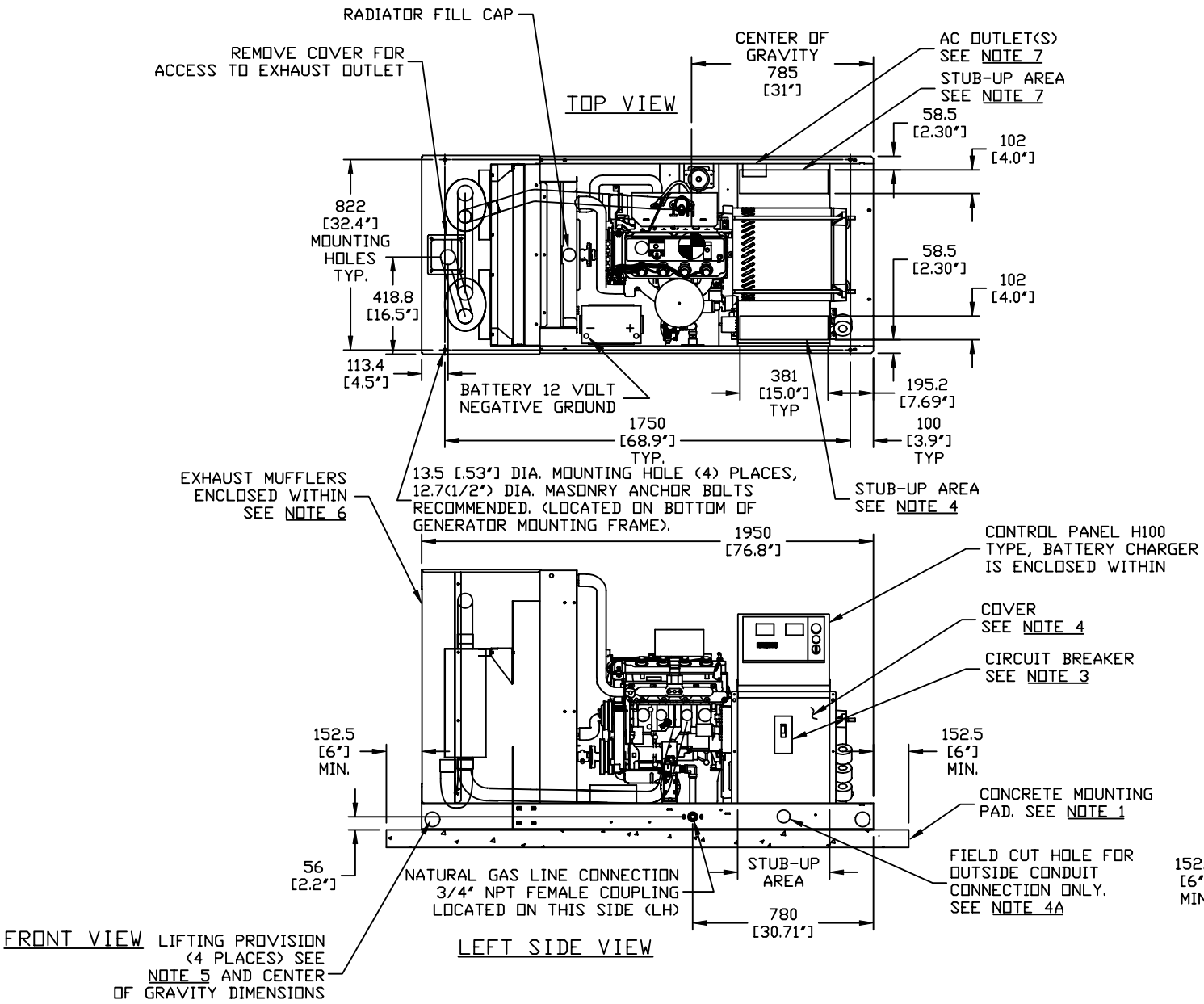

SERVICE ITEM ACCESSIBILITY CHART

SERVICE ITEM	2. 4L
OIL FILL CAP	EITHER SIDE
OIL DIP STICK	RIGHT SIDE
OIL FILTER	RIGHT SIDE
OIL DRAIN HOSE	RIGHT SIDE
RADIATOR DRAIN HOSE	LEFT SIDE
AIR CLEANER ELEMENT	EITHER SIDE
SPARK PLUGS	RIGHT SIDE
MUFFLERS	SEE NOTE 6
FAN BELT	EITHER SIDE
BATTERY	LEFT SIDE
AC OUTLET(S)	RIGHT SIDE

REFERENCE OWNERS MANUAL FOR PERIODIC REPLACEMENT PART LISTINGS

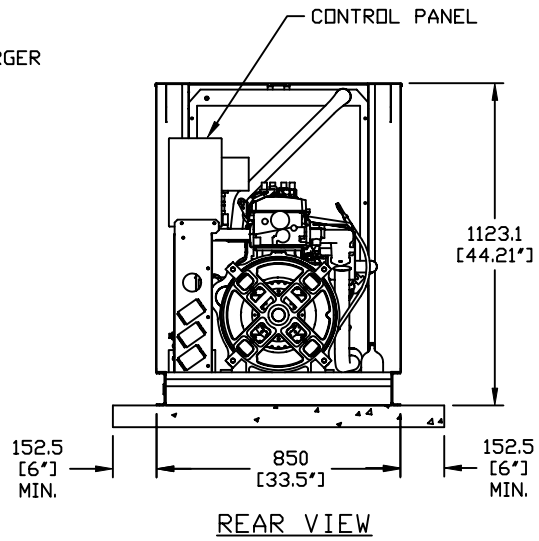

EXPLODED VIEW:
INSTALL 2.4L IND C2 OPEN
DRAWING #: 0G2833

REVISION: G-9690-B
DATE: 2/21/07

2.)

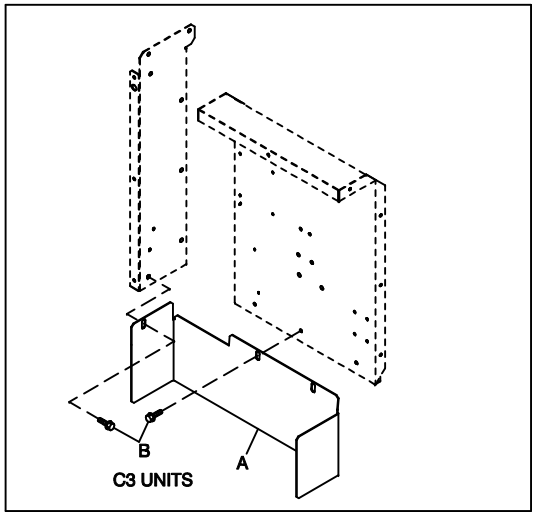

1.)

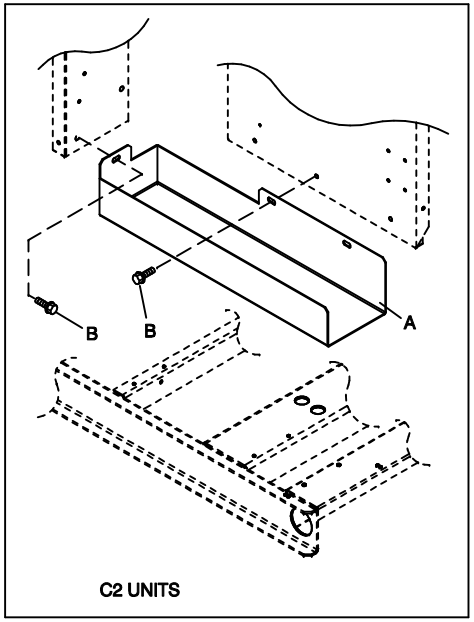

3.)

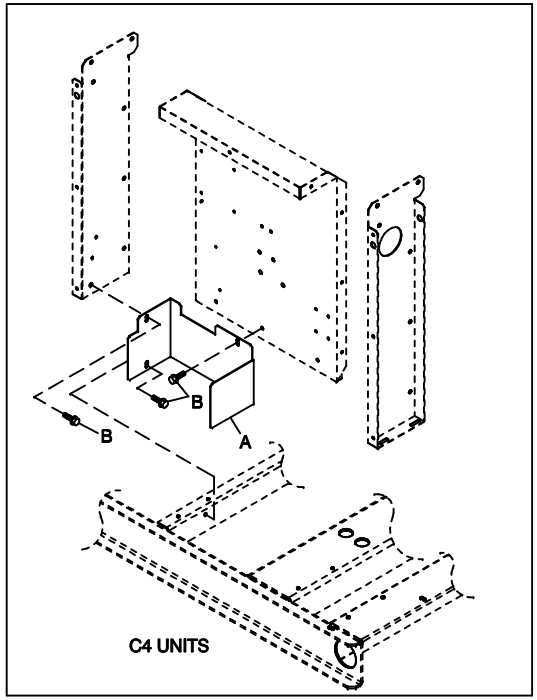

4.)

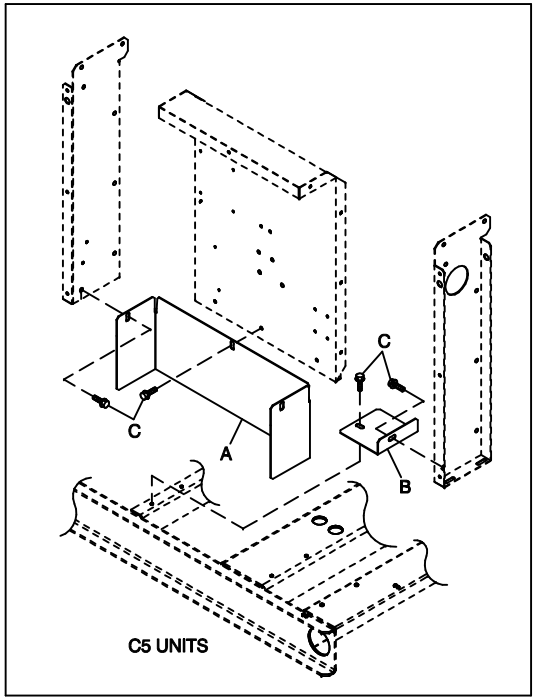

EXPLODED VIEW:
C4 CB CONNECTION BOX SHIELDING C2/C4
DRAWING #: 0G0258D

REVISION: H-0973-A
DATE: 8/29/07

EXPLODED VIEW: C4 CB CONNECTION BOX SHIELDING C2/C4
DRAWING #: 0G0258D

GROUP H

APPLICABLE TO:

ITEM	PART #	QTY.	DESCRIPTION
1.)	C2 UNITS		
A	0F9832	1	SHIELD CONN BOX C2
	0F9832GGS0R	1	SHIELD CONTROL STAND C2
B	0C2454	4	SCREW THF M6-1 X 16 N WA Z/JS
2.)	C3 UNITS		
A	0F9832B	1	SHIELD CONTROL STAND C3
	0F9832KGS0R	1	SHIELD CONTROL STAND C3
B	0C2454	3	SCREW THF M6-1 X 16 N WA Z/JS
3.)	C4 UNITS		
A	0F9832A	1	SHIELD CONTROL STAND C4
B	0C2454	3	SCREW THF M6-1 X 16 N WA Z/JS
4.)	C5 UNITS		
A	0F9832C	1	SHIELD CONTROL STAND C5
	0F9832D	1	SHIELD CONTROL STAND C5
	0F9832EGS0R	1	SHIELD CONTROL STAND C5
	0F9832HGS0R	1	SHIELD CONTROL STAND C5
	0F9832JGS0R	1	SHIELD CONTROL STAND C5
B	0F9832FGS0R	1	SHIELD CONTROL STAND C5
C	0C2464	3	SCREW THF M6-1 X 16 N WA Z/JS

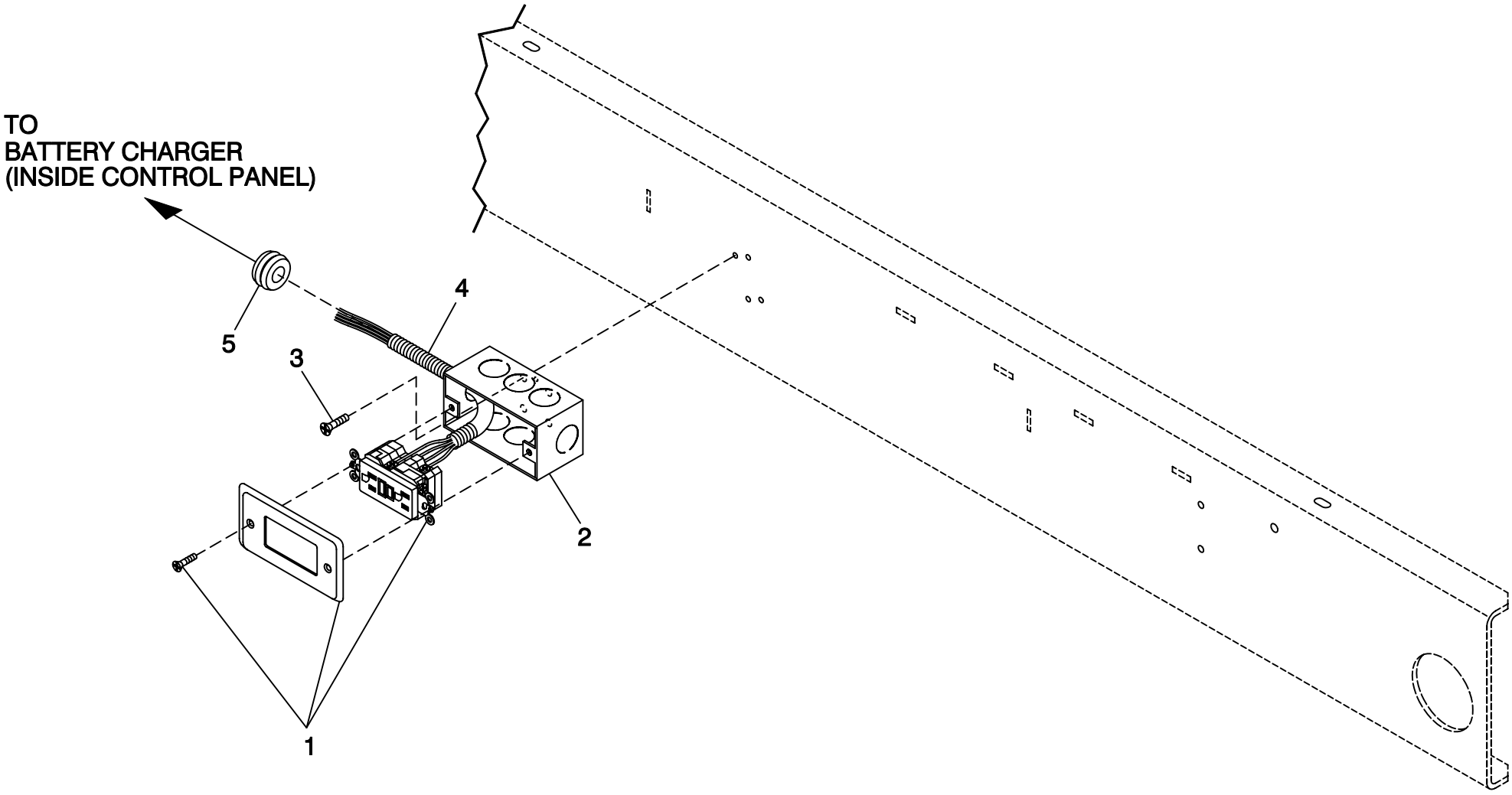

EXPLODED VIEW:
120V UTIL CONN IQT
DRAWING #: 0G1068

EXPLODED VIEW: 120V UTIL CONN IQT
DRAWING #: 0G1068

APPLICABLE TO:

GROUP H

ITEM	PART #	QTY.	DESCRIPTION
1	0F6207	1	OUTLET 20A GFCI
2	0C9275	1	BOX HANDY 2-1/8 X 4
3	025393	2	SCREW HHTT #10-24 X 3/8 CZ
4	0G0896	REF	HARN ALT CON BOX 1PH QT
	0G0897	REF	HARN ALT CON BOX 3PH QT
5	070208	1	GROMMET .87 X .25 X .62

Stationary Emergency Generator
Notes

NOTES

Stationary Emergency Generator
Notes

NOTES

Stationary Emergency Generator Warranty

GENERAC POWER SYSTEMS STANDARD LIMITED WARRANTY FOR HOME STANDBY/LIGHT COMMERCIAL STATIONARY EMERGENCY PRODUCT BELOW 50kW

For a period of two (2) years from the date of sale, Generac Power Systems, Inc. will, at its option, repair or replace any part(s) which, upon examination, inspection, and testing by Generac Power Systems or an Authorized/Certified Generac Power Systems Dealer, or branch thereof, is found to be defective under normal use and service, in accordance with the warranty schedule set forth below. Any equipment that the purchaser/owner claims to be defective must be examined by the nearest Authorized/ Certified Generac Power Systems Dealer, or branch thereof. This warranty applies only to Generac Power Systems Generators used in "Stationary Emergency" applications, as Generac Power Systems, Inc. has defined Stationary Emergency, provided said generator has been properly installed and inspected on-site by appropriate personnel. Scheduled maintenance, as outlined by the generator owner's manual, is highly recommended. This should be performed by an Authorized/Certified Generac Power Systems Dealer, or branch thereof. This will verify service has been performed on the unit throughout the warranty period.

WARRANTY SCHEDULE

YEARS ONE and TWO — Limited comprehensive coverage on mileage, labor, and parts listed.
• - ALL COMPONENTS
*Start-up and/or On-line Registration, or Registration Card, along with Proof of Purchase, must be performed and/or sent in.

Guidelines:

- Any and all warranty repairs and/or concerns, must be performed and/or addressed by an Authorized/Certified Generac Power Systems Dealer, or branch thereof.
- A Generac Power Systems, Inc. Transfer Switch is highly recommended to be used in conjunction with the genset. If a Non - Generac Power Systems, Inc. Transfer Switch is substituted for use and directly causes damage to the genset, no warranty coverage shall apply.
- All warranty expense allowances are subject to the conditions defined in Generac Power Systems Warranty, Policies, and Procedures Flat Rate Manual.
- Units that have been resold are not covered under the Generac Power Systems Warranty, as this Warranty is not transferable except with change of ownership of original structure.
- Unit enclosure is only covered against rust or corrosion the first year of the warranty provision.
- Use of Non-Generac replacement part(s) will void the warranty in its entirety.
- Engine coolant heaters (block-heaters), heater controls and circulating pumps are only covered during the first year of the warranty provision (If applicable).

THIS WARRANTY SHALL NOT APPLY TO THE FOLLOWING:

1. Any unit built/manufactured prior to January 1, 2005.
2. Costs of normal maintenance (i.e. tune-ups, associated part(s), adjustments, loose/leaking clamps, installation and start-up).
3. Any failure caused by contaminated fuels, oils, coolants/antifreeze or lack of proper fuels, oils or coolants/antifreeze.
4. Units sold, rated or used for "Prime Power", "Trailer Mounted" or "Rental Unit" applications as Generac Power Systems have defined Prime Power, Trailer Mounted or Rental Unit. Contact a Generac Power Systems Distributor for Prime Power, Trailer Mounted or Rental Unit definition.
5. Units used for prime power in place of existing utility power where utility is present or in place of utility power where utility power service does not normally exist.
6. Failures caused by any act of God and other force majeure events beyond the manufactures control.
7. Products that are modified or altered in a manner not authorized by Generac Power Systems in writing.
8. Failures due, but not limited to, normal wear and tear, accident, misuse, abuse, negligence, or improper installation or sizing.
9. Any incidental, consequential or indirect damages caused by defects in materials or workmanship, or any delay in repair or replacement of the defective part(s).
10. Failure due to misapplication, misrepresentation, or bi-fuel conversion.
11. Telephone, facsimile, cell phone, satellite, internet, or any other communication expenses.
12. Rental equipment used while warranty repairs are being performed (i.e. rental generators, cranes, etc.).
13. Overtime, holiday, or emergency labor.
14. Planes, ferries, railroad, busses, helicopters, snowmobiles, snow-cats, off-road vehicle or any other mode of transportation deemed abnormal.
15. Any and all expenses incurred investigating performance complaints unless defective Generac materials and/or workmanship were the direct cause of the problem.
16. Starting batteries, fuses, light bulbs, engine fluids, and overnight freight cost for replacement part(s).

THIS WARRANTY IS IN PLACE OF ALL OTHER WARRANTIES, EXPRESSED OR IMPLIED, SPECIFICALLY, GENERAC POWER SYSTEMS MAKES NO OTHER WARRANTIES AS TO THE MERCHANTABILITY OR FITNESS FOR A PARTICULAR PURPOSE. Any implied warranties which are allowed by law, shall be limited in duration to the terms of the express warranty provided herein. Some states do not allow limitations on how long an implied warranty lasts, so the above limitation may not apply to purchaser/owner.

GENERAC POWER SYSTEMS ONLY LIABILITY SHALL BE THE REPAIR OR REPLACEMENT OF PART(S) AS STATED ABOVE. IN NO EVENT SHALL GENERAC POWER SYSTEMS BE LIABLE FOR ANY INCIDENTAL, OR CONSEQUENTIAL DAMAGES, EVEN IF SUCH DAMAGES ARE A DIRECT RESULT OF GENERAC POWER SYSTEMS, INC. NEGLIGENCE.

Some states do not allow the exclusion or limitation of incidental or consequential damages, so the above limitations may not apply to purchaser/owner. Purchaser/owner agrees to make no claims against Generac Power Systems, Inc. based on negligence. This warranty gives purchaser/owner specific legal rights. Purchaser/owner also may have other rights that vary from state to state.

Generac Power Systems, Inc. · P.O. Box 8 · Waukesha, WI 53187
Ph: (262) 544-4811 · Fax: (262) 544-4851
1-888-GENERAC (1-888-436-3722)

Bulletin 0171360SVE / Rev. C 12.08 / Printed in U.S.A.

Printed in U.S.A.