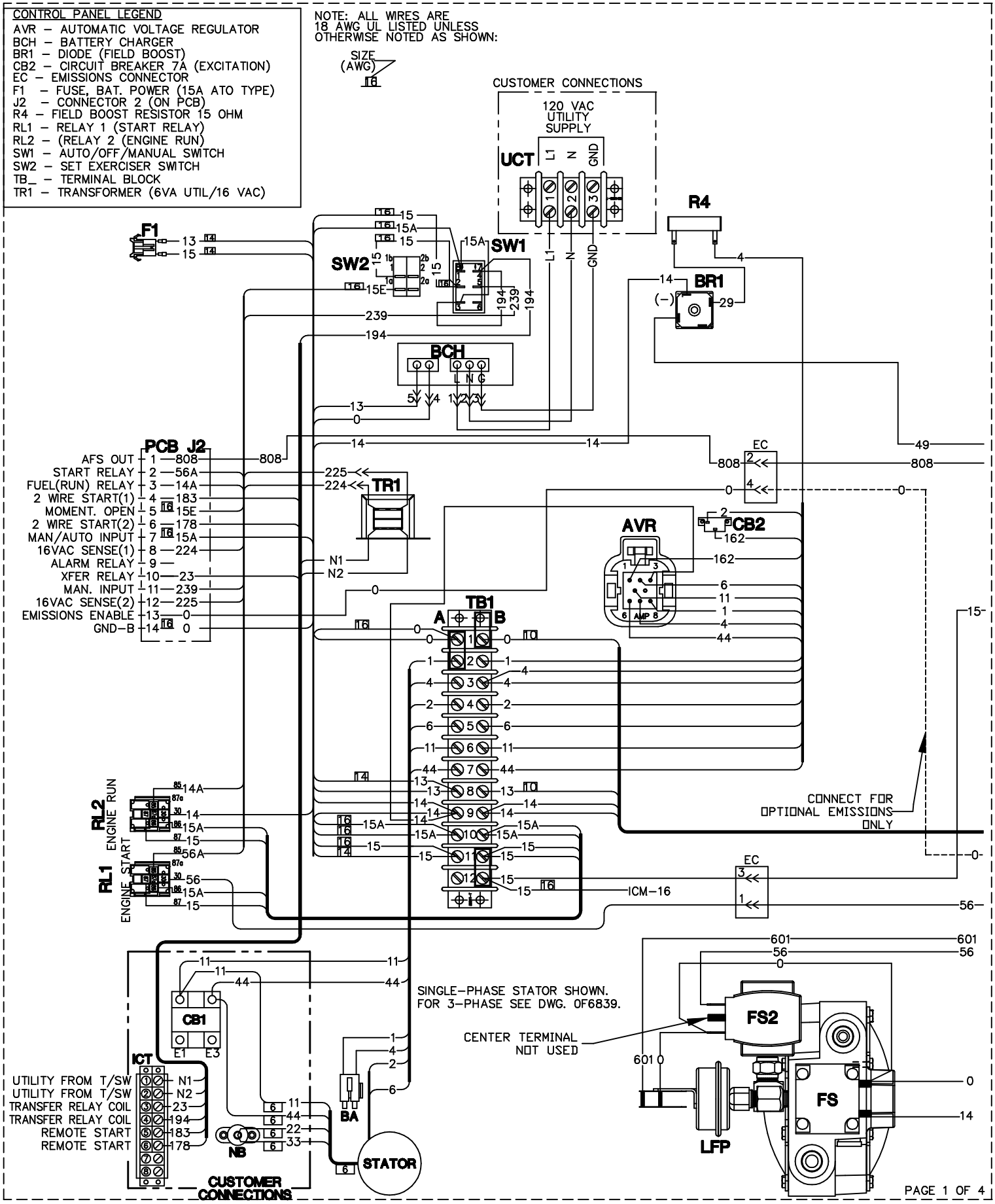

WIRING - DIAGRAM

4.2L R200

REVISION: -A-

DATE:

DRAWING #: 0G5860

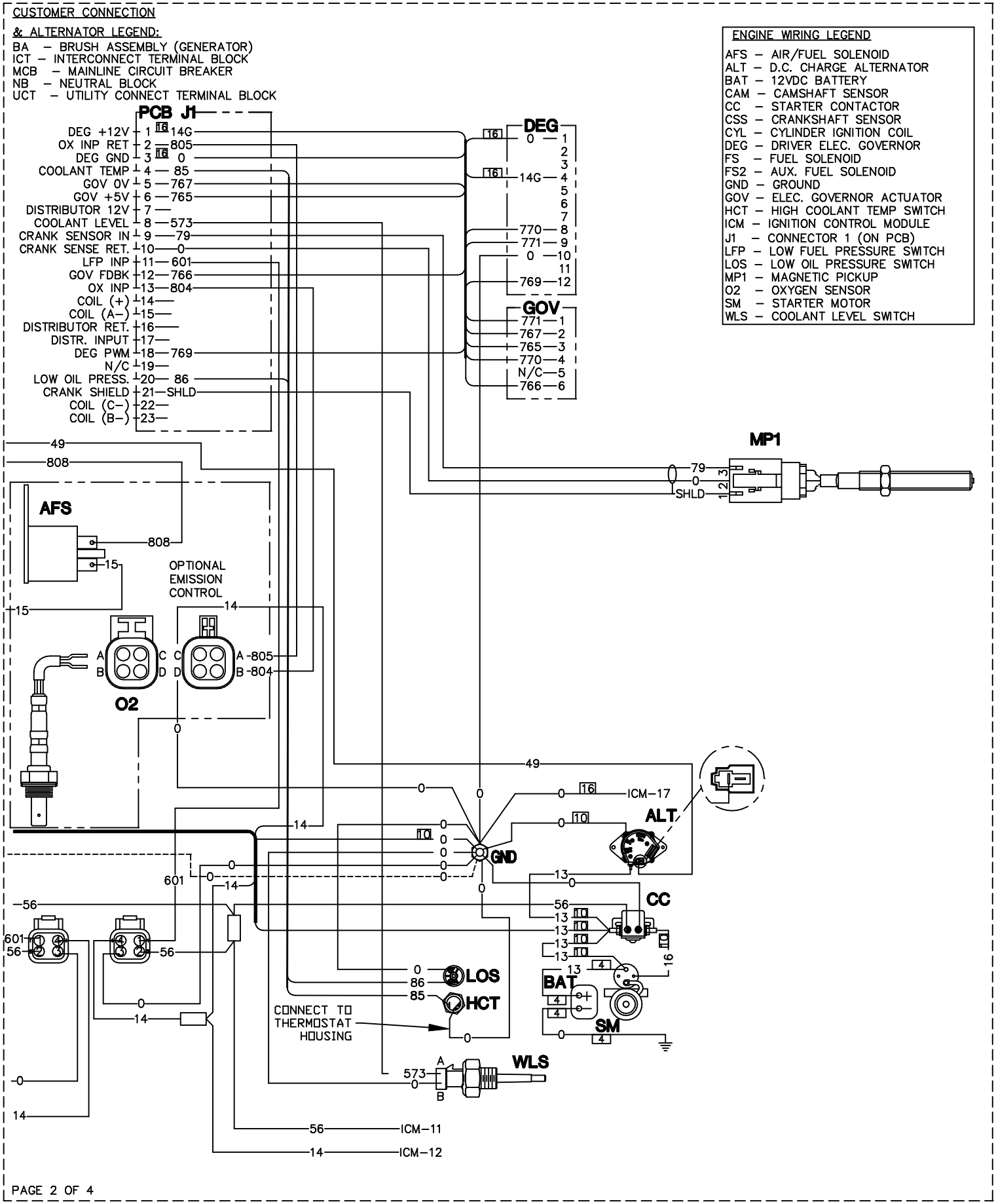
CUSTOMER CONNECTION
& ALTERNATOR LEGEND:
BA – BRUSH ASSEMBLY (GENERATOR)
ICT – INTERCONNECT TERMINAL BLOCK
MCB – MAINLINE CIRCUIT BREAKER
NB – NEUTRAL BLOCK
UCT – UTILITY CONNECT TERMINAL BLOCK
ENGINE WIRING LEGEND
AFS – AIR/FUEL SOLENOID
ALT – D.C. CHARGE ALTERNATOR
BAT – 12VDC BATTERY
CAM – CAMSHAFT SENSOR
CC – STARTER CONTACTOR
CSS – CRANKSHAFT SENSOR
CYL – CYLINDER IGNITION COIL
DEG – DRIVER ELEC. GOVERNOR
FS – FUEL SOLENOID
FS2 – AUX. FUEL SOLENOID
GND – GROUND
GOV – ELEC. GOVERNOR ACTUATOR
HCT – HIGH COOLANT TEMP SWITCH
ICM – IGNITION CONTROL MODULE
J1 – CONNECTOR 1 (ON PCB)
LFP – LOW FUEL PRESSURE SWITCH
LOS – LOW OIL PRESSURE SWITCH
MP1 – MAGNETIC PICKUP
O2 – OXYGEN SENSOR
SM – STARTER MOTOR
WLS – COOLANT LEVEL SWITCH
PCB J1
DEG +12V 1 14G
OX INP RET 2 805
DEG GND 3 0
COOLANT TEMP 4 85
GOV 0V 5 767
GOV +5V 6 765
DISTRIBUTOR 12V 7
COOLANT LEVEL 8 573
CRANK SENSOR IN 9 79
CRANK SENSE RET. 10 0
LFP INP 11 601
GOV FDBK 12 766
OX INP 13 804
COIL (+) 14
COIL (A–) 15
DISTRIBUTOR RET. 16
DISTR. INPUT 17
DEG PWM 18 769
N/C 19
LOW OIL PRESS. 20 86
CRANK SHIELD 21 SHLD
COIL (C–) 22
COIL (B–) 23
DEG
GOV
MP1
AFS
OPTIONAL EMISSION CONTROL
O2
GND
ALT
CC
BAT
SM
LOS
HCT
WLS
CONNECT TO THERMOSTAT HOUSING
ICM–17
ICM–11
ICM–12
PAGE 2 OF 4

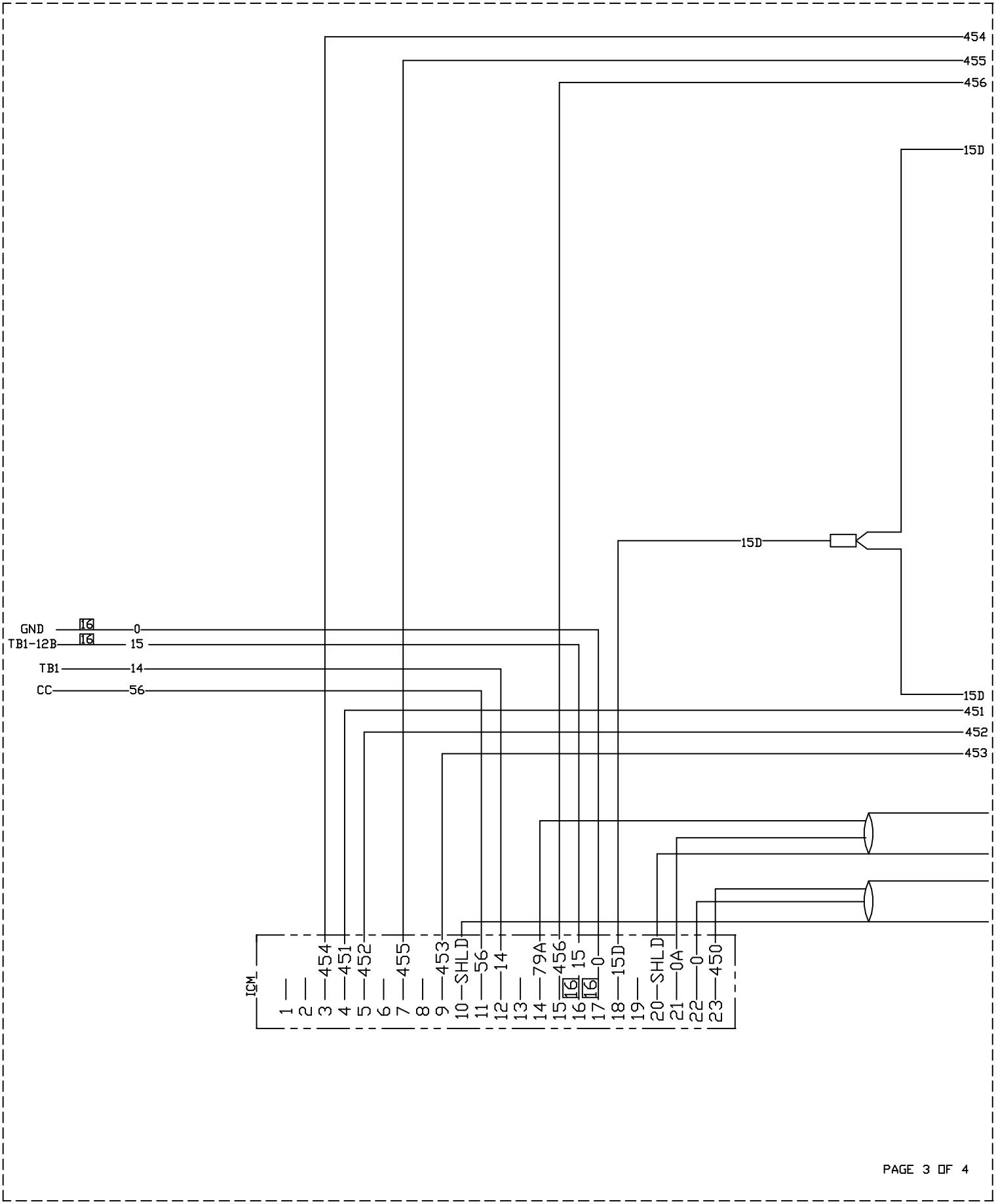

WIRING - DIAGRAM

4.2L R200

DRAWING #: 0G5860

REVISION: -A-

DATE:

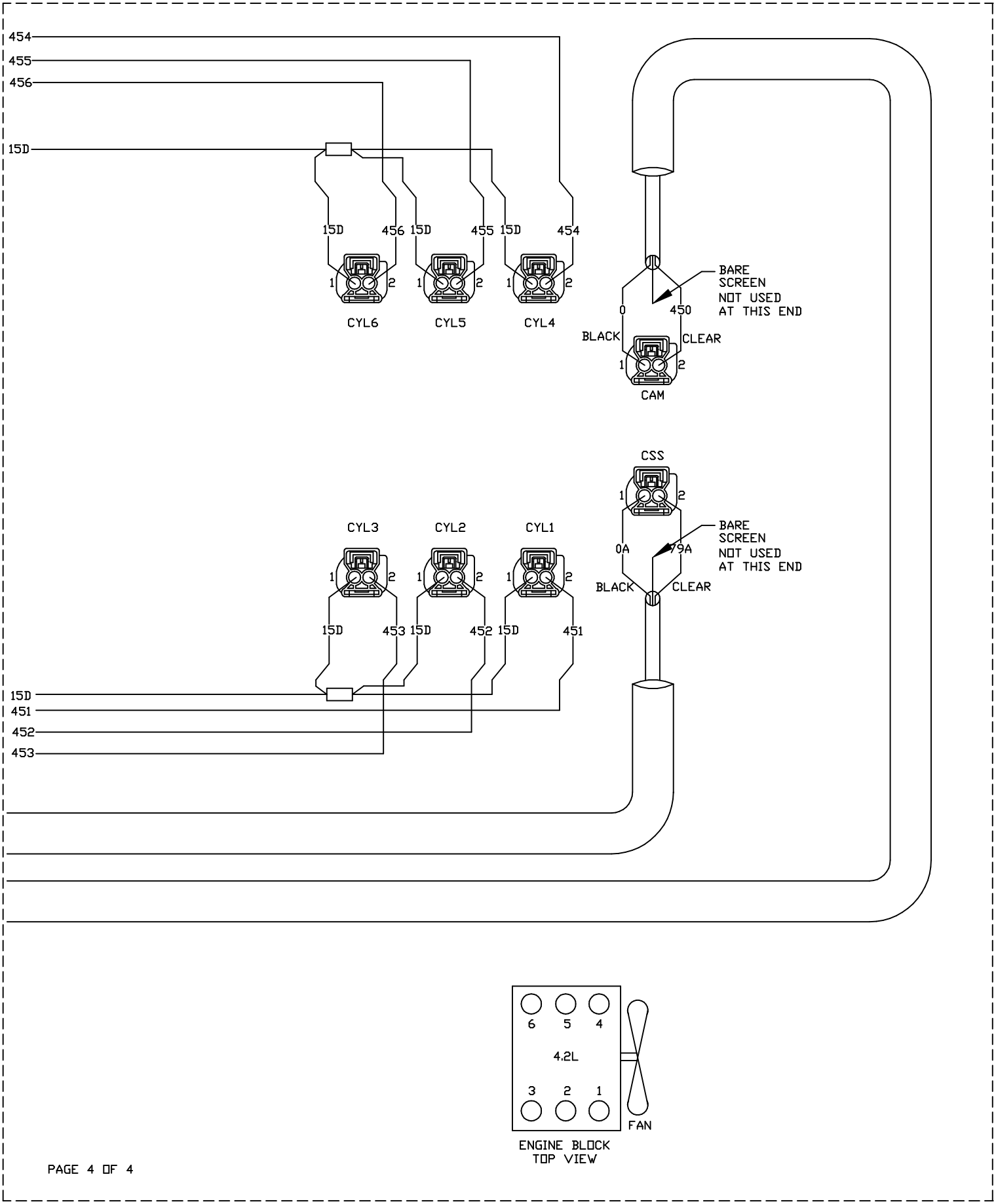

PAGE 4 OF 4

WIRING - DIAGRAM

4.2L R200

REVISION: -A-

DATE:

DRAWING #: 0G5860