GROUP C

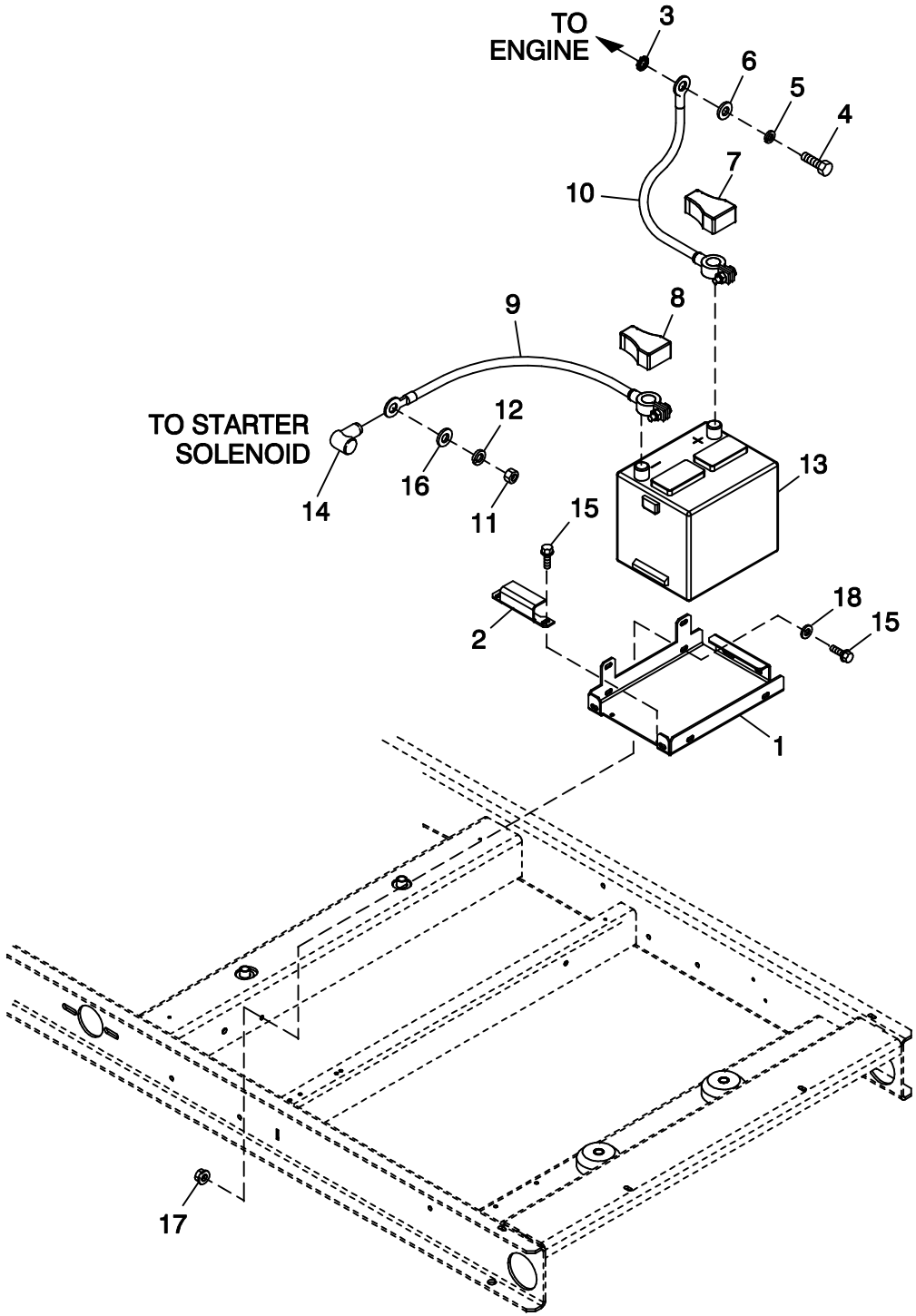

EXPLODED VIEW:
BATTERY 60KW C2
DRAWING #: 0G7580

REVISION: -A-
DATE: 8/1/08

EXPLODED VIEW: BATTERY 60KW C2
DRAWING #: 0G7580

GROUP C

APPLICABLE TO:

ITEM	PART #	QTY.	DESCRIPTION
1	0F3408C	1	BATTERY TRAY, C1 & C2
2	0F3411	1	STRAP BATTERY RETAINMENT
3	025507	REF	WASHER SHAKEPROOF EXT 7/16 STL
4	052212	REF	SCREW HHC M10-1.25 X 25 G8.8
5	046526	REF	WASHER LOCK M10
6	022131	REF	WASHER FLAT 3/8-M10 ZINC
7	050331A	REF	BATTERY POST COVER RED +
8	050331	REF	BATTERY POST COVER BLACK -
9	038805Y	1	CABLE BATTERY BLACK #1 X 18.00
10	03880400AE	1	CABLE BATT RED #1 X 18.00
11	045771	REF	NUT HEX M8-1.25 G8 YEL CHR
12	022129	REF	WASHER LOCK M8-5/16
13	077483	REF	BATTERY 12VDC 75-AH 26
14	0F3976	1	BOOT CONTACTOR CABLES
15	042568	4	SCREW HHC M6-1.0 X 20 C8.8
16	022145	REF	WASHER FLAT 5/16-M8 ZINC
17	0D3700	4	NUT FLANGE M6-1.0 NYLOK
18	049811	4	WASHER FLAT M6

REVISION: -A-
DATE: 8/1/08