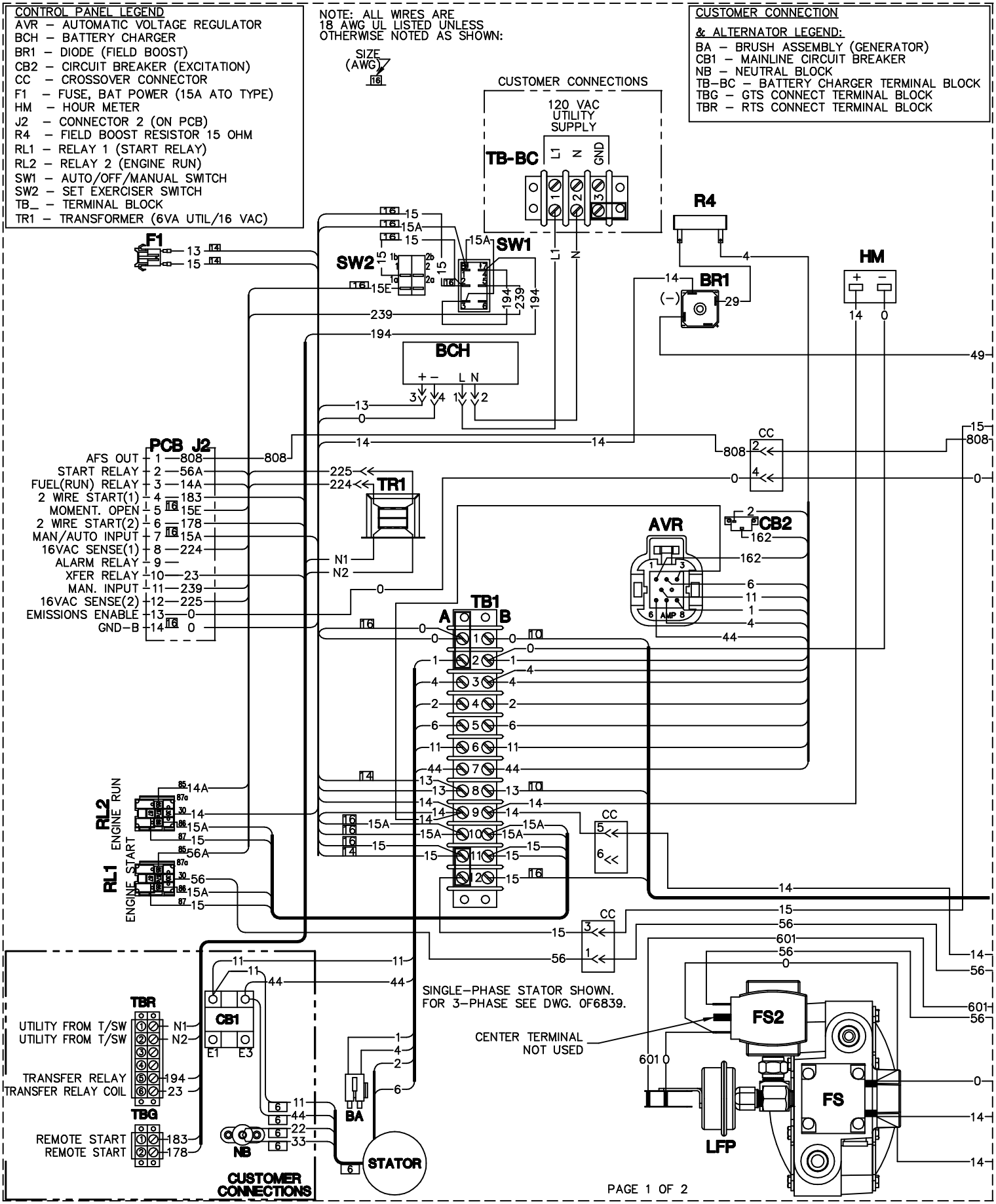

WIRING - DIAGRAM

2.4L R-200B

REVISION: H-4305-C

DATE: 4/15/09

DRAWING #: 0G8839

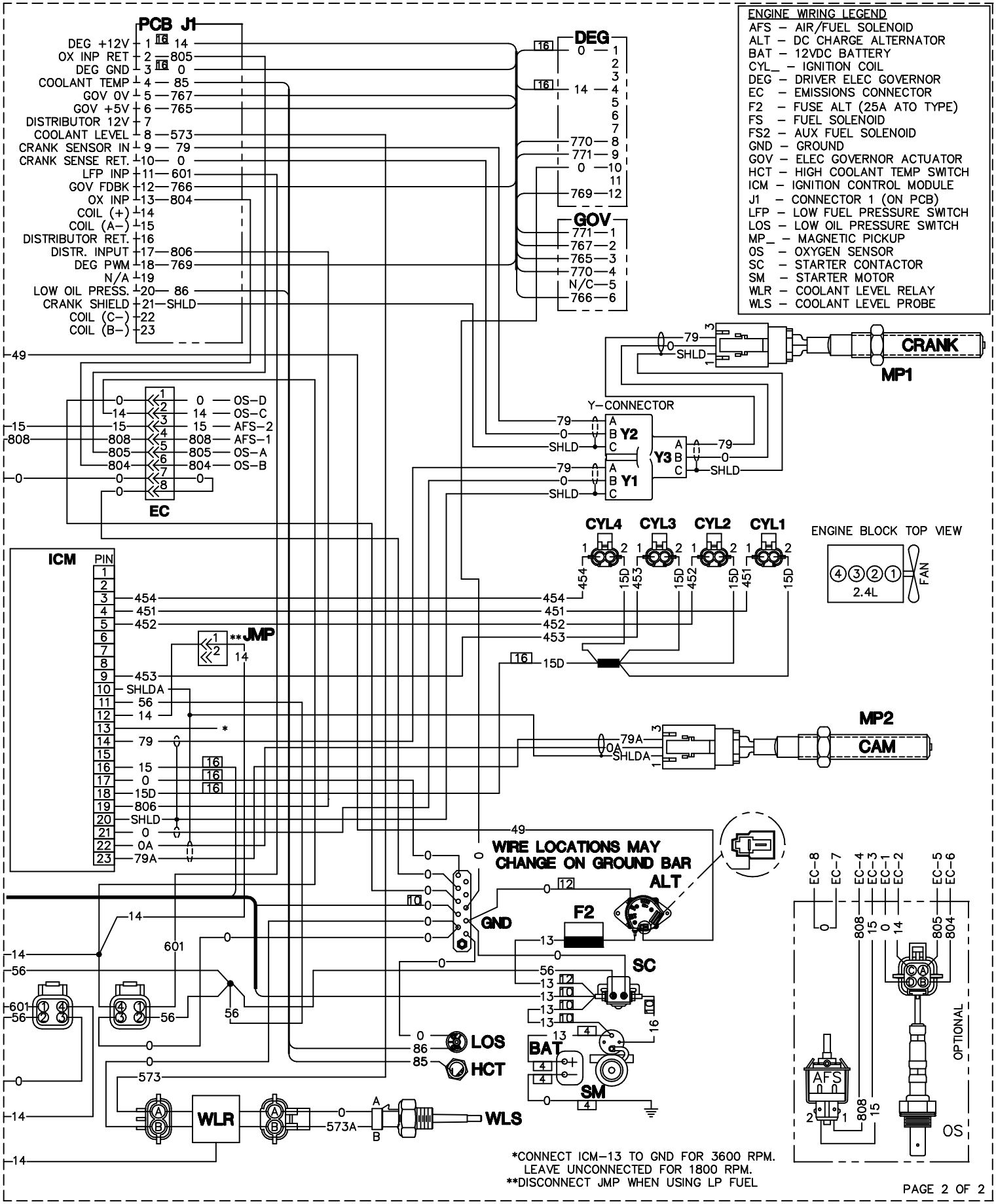

WIRING - DIAGRAM

2.4L R-200B

DRAWING #: 0G8839

REVISION: H-4305-C

DATE: 4/15/09