GD CONNECTOR

PIN	WIRE	TO	FUNCTION
1	0	GND	NOTE 1
4	14	RB1–7	NOTE 3
8	771	GA1–1	THROTTLE DRIVE LO
9	770	GA1–4	THROTTLE DRIVE HI
10	0	GND	NOTE 1
12	769	J1–33	THROTTLE PWM

AVR CONNECTOR

PIN	WIRE	TO	FUNCTION
1	1	FIELD	– FIELD
2	194	J2–31	+12VDC
3	6	PME	PME OUTPUT
4	4	R1	+ FIELD
5	4	FIELD	+ FIELD
6	403	J2–8	GATE TRIGGER B
7	404	J2–20	GATE TRIGGER A
10	406	J2–30	ZERO CROSSING I/P
11	405	J2–19	GROUND (ISO)
13	162	CB	PME OUTPUT (AFTER CB)

ICM - IGNITION MODULE CONNECTOR

PIN	WIRE	TO	FUNCTION
1	459	CYL9	IGNITION COIL DRIVE 9
2	460	CYL10	IGNITION COIL DRIVE 10
3	457	CYL7	IGNITION COIL DRIVE 7
4	451	CYL1	IGNITION COIL DRIVE 1
5	456	CYL6	IGNITION COIL DRIVE 6
6	452	CYL2	IGNITION COIL DRIVE 2
7	453	CYL3	IGNITION COIL DRIVE 3
8	454	CYL4	IGNITION COIL DRIVE 4
9	455	CYL5	IGNITION COIL DRIVE 5
10	SHLD	CUT	CAMSHAFT SENSOR DRAIN
11	56	RB1–10	STARTER RELAY OUT
12	14	RB1–7	NOTE 3
13	0	GND	NOTE 1
14	79A	CSS–2	CRANKSHAFT SENSOR +
15	458	CYL8	IGNITION COIL DRIVE 8
16	15C	F3	NOTE 7
17	0	GND	NOTE 1
18	15D	CYL1–CYL10	IGNITION COIL PWR
19	806	J1–27	IGNITION ALARM
20	SHLD	CUT	CRANKSHAFT SENSOR DRAIN
21	0A	CSS–1	CRANKSHAFT SENSOR –
22	0	CAM–1	CAMSHAFT SENSOR –
23	450	CAM–2	CAMSHAFT SENSOR +

ENGINE CONTROL MODULE CONNECTIONS

J1

PIN	WIRE	TO	FUNCTION
3	810	MOD–2	EXTERNAL MODEM GROUND
4	805	OS	OXYGEN SENSOR RTN (OPTION)
5	804	OS	OXYGEN SENSOR + (OPTION)
10	R15B	RB1A–3/ES1	OVERSPEED/WATCHDOG
11	256	RB1A–5	FUEL RELAY
12	0	GND	NOTE 1
14	811	MOD–3	DCD
15	68V	WTS–1	COOLANT TEMP +
16	803	BCH	BAT CHARGER CURRENT
17	766R	GA–2	THROTTLE POS RTN
18	766V	GA–1	THROTTLE POS +
19	69R	OPS–3	OIL PRESS RTN
20	69V	OPS–1	OIL PRESS +
21	808	AFS	AIR/FUEL SOLENOID (OPTION)
23	56A	RB1A–6	STARTER RELAY
24	0	MPU1–2	MPU1 SIGNAL (–)
25	79	MPU1–3	MPU1 SIGNAL (+)
26	812	MOD–4	ENABLE
27	806	ICM–19	IGNITION ALARM
29	573R	WLS–2	COOLANT LVL RTN
30	573V	WLS–1	COOLANT LVL +
31	68R	WTS–2	COOLANT TEMP RTN
32	809	MOD–1	+12
33	769	GD–12	THROTTLE PWM
34	445	RB1A–2	ALARM RELAY
35	15B	F2	NOTE 6

J2

	PIN	WIRE	TO	FUNCTION
	1	391	CUST CON	RS485– (XFER SW)
	2	388	COM–3	RS232 TX (GENLINK)
	3	DI3	CUST CON	LINE POWER SIGNAL
	4	183	CUST CON	REMOTE START
	5	174	SW1	"AUTO" START
	6	224	IFT	V SENSE GEN A PH
	7	227	IFT	V SENSE RTN
	8	403	AVR–6	AVR GATE TRIGGER B
*	9	399C	CT3	GEN C PH CURRENT –
*	10	398C	CT3	GEN C PH CURRENT +
	11	399A	CT1	GEN A PH CURRENT –
	12	398A	CT1	GEN A PH CURRENT +
	13	390	CUST CON	RS485+ (XFER SW)
	14	387	COM–2	RS232 RX (GENLINK)
	15	601	LFP	LOW FUEL PRESSURE
	16	R15	ES1	EMERGENCY STOP
*	17	226	IFT	V SENSE GEN C PH
	19	405	AVR–11	AVR GROUND
	20	404	AVR–7	AVR GATE TRIGGER A
	24	SHLD	CUST CON	RS485 DRAIN (XFER SW)
	25	389	COM–5	RS232 COM (GENLINK)
	26	DI4	CUST CON	GEN POWER SIGNAL
	27	505	BCH	BAT CHARGER FAIL
	28	175	SW1	"MANUAL" START
	29	225	IFT	V SENSE GEN B PH
	30	406	AVR–10	AVR ZERO CROSSING I/P
	31	194	AVR–2	AVR +12VDC
	34	399B	CT2	GEN B PH CURRENT–
	35	398B	CT2	GEN B PH CURRENT+

* – CONNECTIONS NOT USED IN 1Ø UNITS.

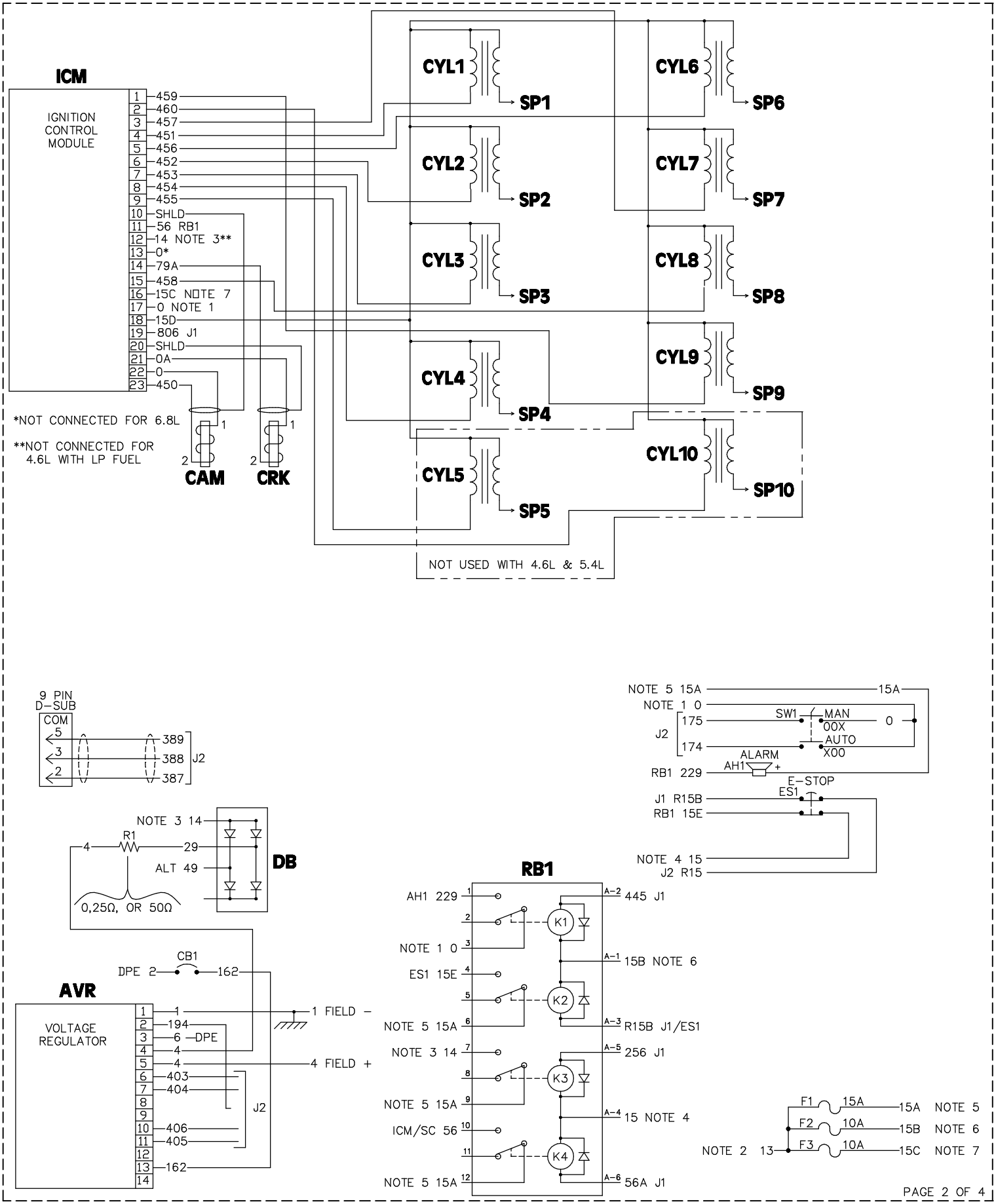

SCHEMATIC - DIAGRAM

4.6L, 5.4L & 6.8L H-PANEL

DRAWING #: 0F3901

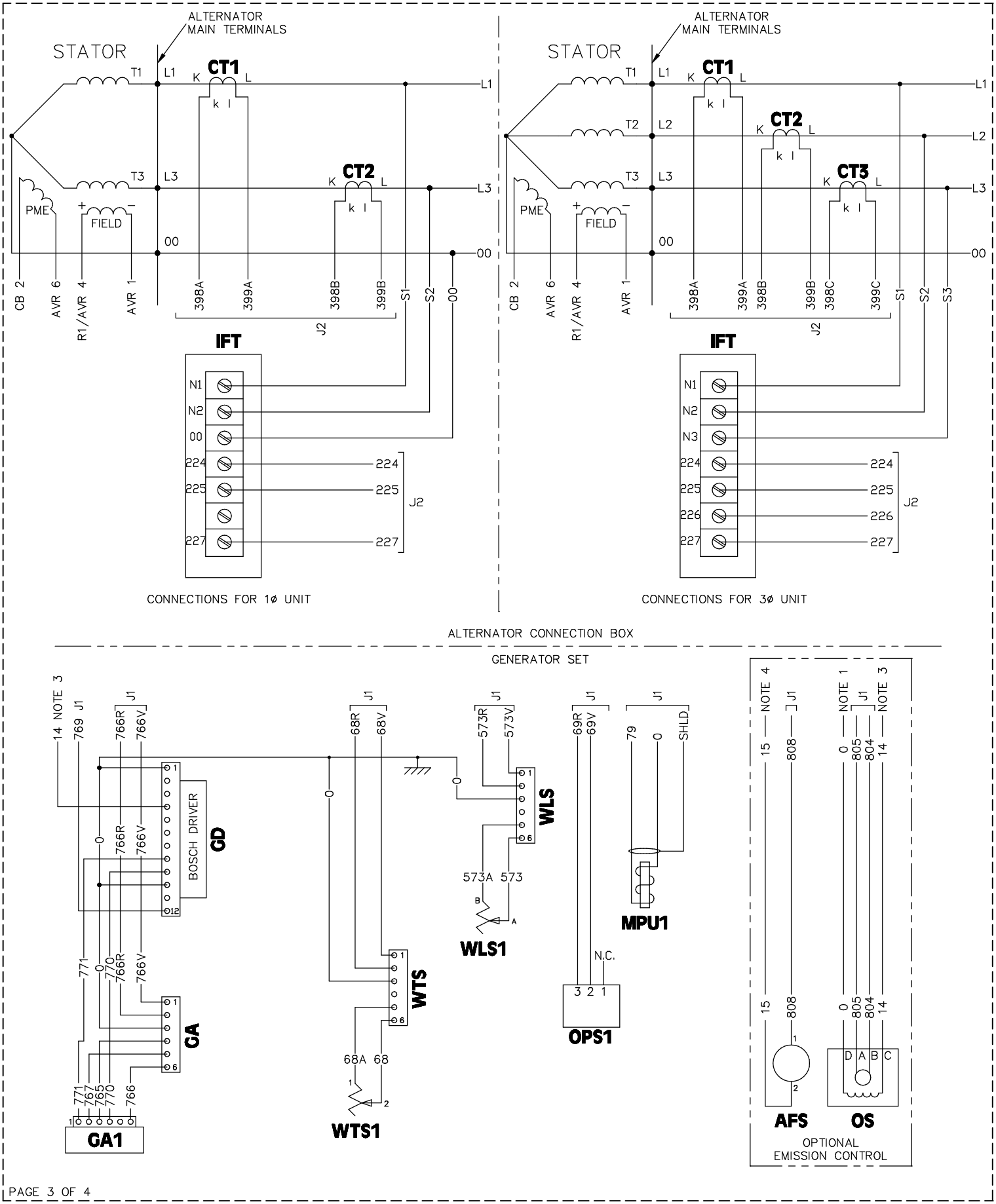

PAGE 3 OF 4

SCHEMATIC - DIAGRAM

4.6L, 5.4L & 6.8L H-PANEL

DRAWING #: 0F3901

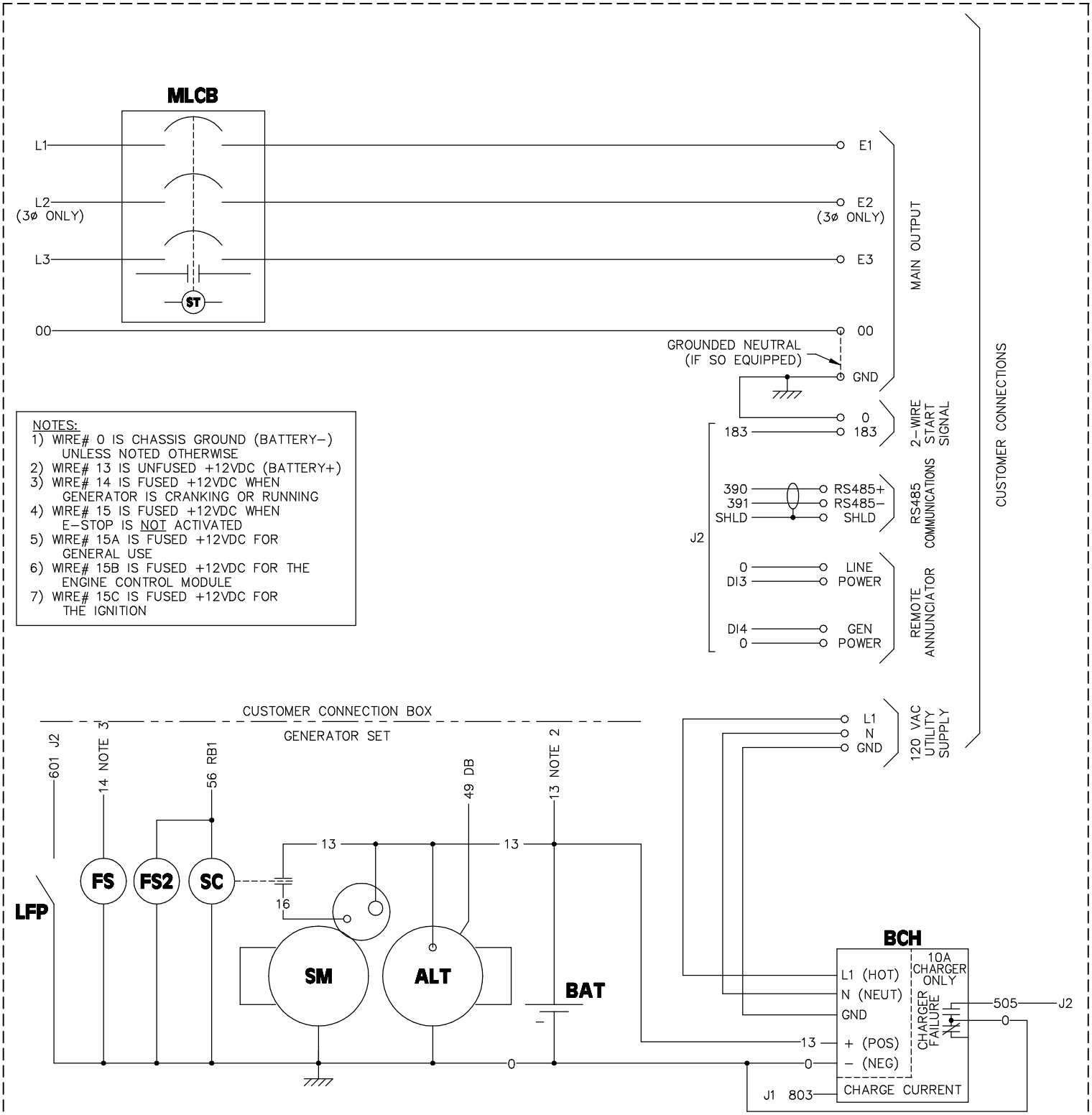

NOTES:
1) WIRE# 0 IS CHASSIS GROUND (BATTERY–) UNLESS NOTED OTHERWISE
2) WIRE# 13 IS UNFUSED +12VDC (BATTERY+)
3) WIRE# 14 IS FUSED +12VDC WHEN GENERATOR IS CRANKING OR RUNNING
4) WIRE# 15 IS FUSED +12VDC WHEN E–STOP IS NOT ACTIVATED
5) WIRE# 15A IS FUSED +12VDC FOR GENERAL USE
6) WIRE# 15B IS FUSED +12VDC FOR THE ENGINE CONTROL MODULE
7) WIRE# 15C IS FUSED +12VDC FOR THE IGNITION

LEGEND

00 – NEUTRAL
AFS – AIR/FUEL SOLENOID
AH1 – ALARM HORN
ALT – CHARGE ALTERNATOR
AVR – AUTOMATIC VOLTAGE REGULATOR
BAT – BATTERY (12VDC)
BCH – BATTERY CHARGER
CAM – CAMSHAFT SENSOR
CB_ – CIRCUIT BREAKER
COM – COMMUNICATION CONNECTOR
CRK – CRANKSHAFT SENSOR
CT_ – CURRENT TRANSFORMER
CUST CON – CUSTOMER CONNECTION
CYL – CYLINDER IGNITION COIL
DPE – EXCITER
ES1 – E–STOP SWITCH
F – FUSE
FS_ – FUEL SOLENOID
GA – GOVERNOR ACTUATOR
GD – GOVERNOR DRIVER
ICM – IGNITION CONTROL MODULE
IFT – INTERFACE TRANSFORMER
ISO – ISOLATED (ELECTRICALLY)
J_ – ENGINE CONTROLLER CONNECTIONS
MLCB – MAIN LINE CIRCUIT BREAKER
MPU – MAGNETIC PICK–UP
OPS_ – OIL PRESSURE SENDER
OS – OXYGEN SENSOR
R_ – RESISTOR
RB_ – RELAY BOARD
SC – STARTER CONTACTOR
SHLD – SHIELD
SM – STARTER MOTOR
SP – SPARK PLUG
ST – SHUNT TRIP
SW1 – AUTO/MANUAL SELECT SWITCH
WLS_ – WATER LEVEL SENSOR
WTS_ – WATER TEMPERATURE SENDER

SCHEMATIC - DIAGRAM
4.6L, 5.4L & 6.8L H-PANEL
DRAWING #: 0F3901

REVISION: H-6782-F
DATE: 6/14/10