PART NO. 0H1256

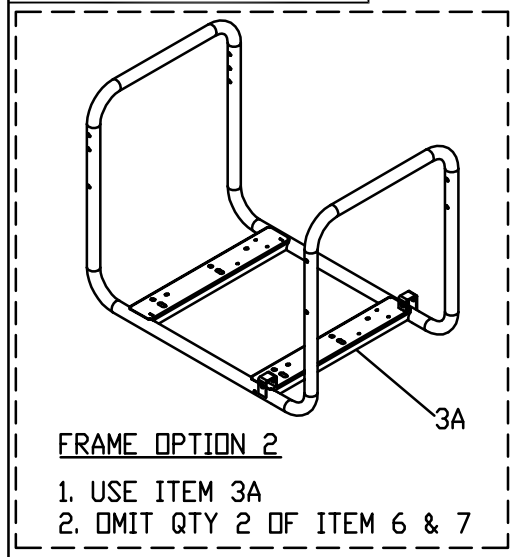

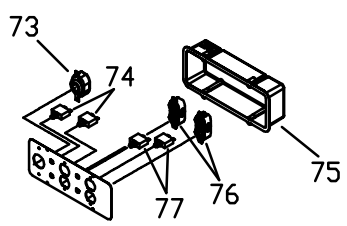

CONTROL PANEL DETAIL

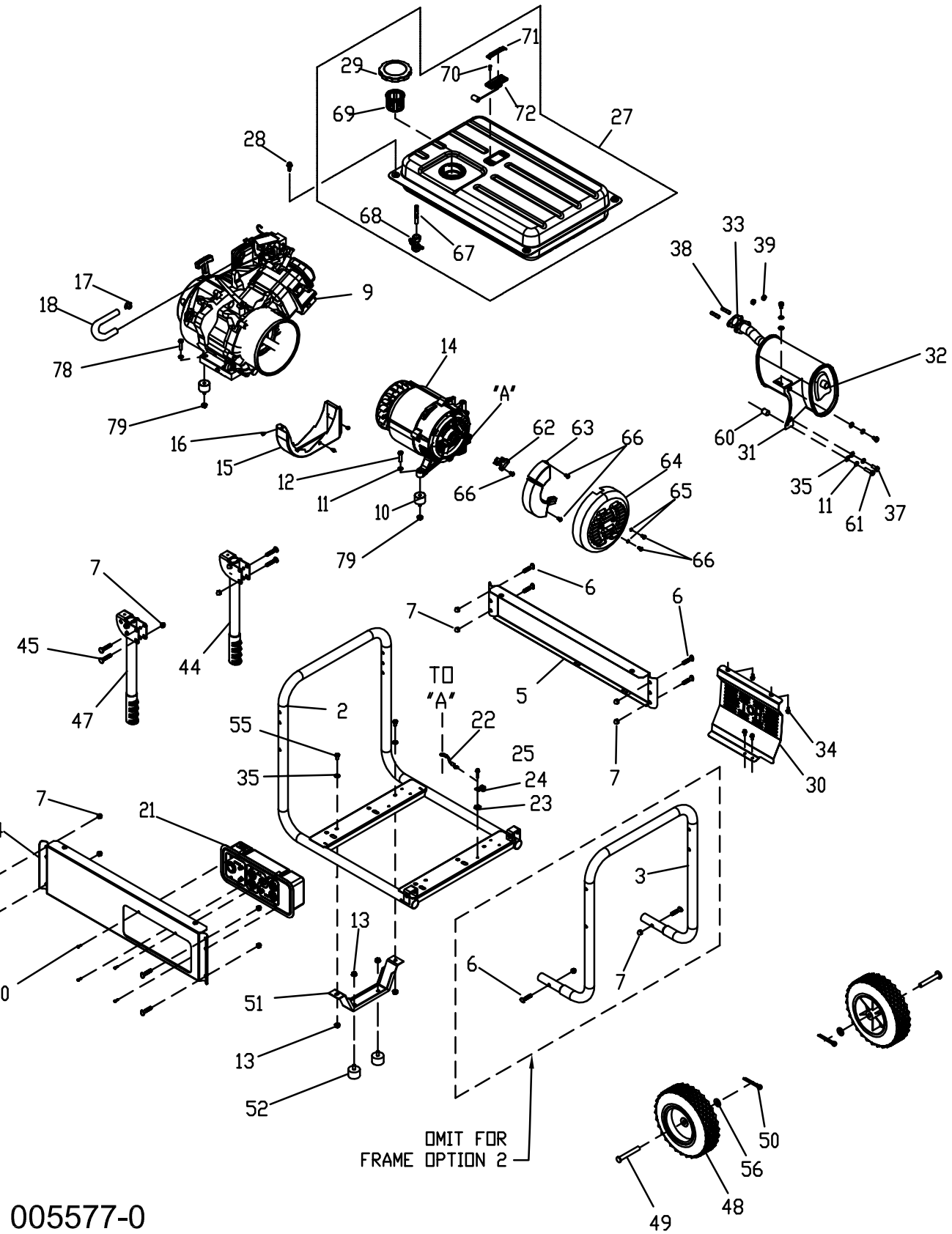

ITEM	PART #	QTY.	DESCRIPTION
2	0H0168	1	ASSEMBLY, CRADLE
3	0G8326	1	CRADLE END
3A	0H1792	1	ASSEMBLY, FRAME 1-PIECE
4	0G8327	1	PANEL RAIL
5	0G8328	1	BACK RAIL
6	0H1780	10	CURVED HEAD BOLT M8-1.25 X 42mm LONG
7	0H1782	12	CAP NUT LOCKING M8-1.25
9	0G8442	1	ENGINE, 389cc WITHOUT MUFFLER
10	0H1783	4	VIB MOUNT RUBBER 35mm X 25.4mm X M8-1.25
11	022129	4	WASHER, LOCK M8-5/16
12	042909	2	SCREW, HHC M8-1.25 X 30mm LONG
13	052858	4	NUT, LOCK FLANGE M8-1.25
14	0G8899	1	ALTERNATOR, 5000W BRUSH TYPE
15	0G8654	1	SCROLL, ALTERNATOR
16	0E5845	3	SCREW, HHC M5-0.8 X 8
17	0C7649	1	CLAMP, HOSE 0.38-0.87
18	0G9757	1	FUEL HOSE, 4ID X 8.5 OD X 120mm
20	0G8382	4	SCREW, PPPH #8-16 X ½"
21	0G9776C	1	ASSY, RECEPTACLE PANEL 25A
22	0G8753C	1	ASSY, GROUND WIRE ALTERNATOR TO BASE
23	0A1658	1	WASHER, LOCK SPECIAL ¼"
24	055414	1	LUG, SOLDERLESS #2-#8 X 17/64
25	092079	1	SCREW, HHTT M6-1.0 X 25
27	0G8430	1	ASSEMBLY, FUEL TANK 6.6 GALLON
28	0G6445	4	SCREW, HHTT M8-1.25 X 20
29	0H132.5A	1	FUEL CAP, VENTED
30	0G8713	1	HEAT SHIELD SKU 5-6.5KW
31	0G8542	1	BRACKET, MUFFLER 389cc
32	0G8543	1	MUFFLER, 389cc
33	0G9028	1	GASKET, MUFFLER
34	090388	4	SCREW, HHTT M6-1.0 X 12
35	022145	4	WASHER, FLAT 5/16-M8
36	022129	4	WASHER, LOCK M8-5/16
37	039253	3	SCREW, HHC M8-1.25 X 20
38	045761M	2	STUD, M8-1.25 X 35
39	045771	2	HEX NUT M8-1.25
44	0G8128A	1	ASSEMBLY, HANDLE LEFT HAND
45	0H1781	4	CARRIAGE HEAD BOLT M8-1.25 X 46mm LONG
47	0H1832A	1	ASSEMBLY, HANDLE RIGHT HAND
48	0G8651	1	TIRE, 9.5" DIA RUN FLAT PLASTIC / RUBBER
49	0H0204	2	AXLE PIN, ½" X 4"
50	0D4999	2	COTTER PIN, 1/8" X 1-1/4"
51	0H1114	1	BENT FOOT FRAME
52	0H1829	2	RUBBER FOOT, M8-1.25
55	042907	2	SCREW, HHC M8-1.25 X 16

ITEM	PART #	QTY.	DESCRIPTION
56	022304	2	WASHER, FLAT ½"
60	052210	1	SPACER, 0.34 X 0.62 X 0.59
61	039253	4	SCREW, HHC M8-1.25 X 20
62	0G8990103	*	BRUSH-ALTERNATOR
63	0G8990101	*	AVR FOR ALTERNATOR 0G9899
64	0H3049	1	COVER, ALTERNATOR INLET
65	049226	2	WASHER, LOCK M5
66	091526	5	SCREW, PPHM M5-0.8 X 12
67	0H1613	1	FILTER, FUEL VALVE
68	0H1684	1	VALVE, FUEL SHUTOFF
69	0H1326	1	STRAINER, FUEL CAP
70	0H1357	2	SCREW, PPHM M5-0.8 X 12
71	0H1359	1	PLATE, FUEL GAGE
72	0H1345A	1	FUEL GAGE, 90MM LONG ARM
73	0G8758	1	OUTLET, 30A 120/250V SPCGRD
74	0H0265D	2	CB, 25A 1P 120V CUL/CSA
75	0G9756	1	RECEPTACLE PANEL
76	0G8507	2	OUTLET, 20A 120V
77	0H0265C	2	CB, 20A 1P 120V CUL/CSA
78	039414	2	SCREW HHC M8-1.25 X 35 C8.8
79	067989	4	NUT HEX FL WHIZ M8-1.25

E.C.O.	REV.	DATE
---	A	10/22/08
H-3449	B	11/06/08
H-3690	C	1/19/09
H-3969	D	2/18/09
H-3946	E	4/07/09
H-4716	F	7/30/09
H-6317	G	03/25/10

MODEL: 005577-0
CENTURION 5.0kW PULL START

DO NOT SCALE

GROUPEV

EXPLODED VIEW: CENT 5.0kW PORTABLE		GENERAC POWER SYSTEMS P.O. BOX 8 WAUKESHA, WIS. 53186	
DRAWN BY: KNM	DATE: 10/22/08		
CHECKED BY: DMC	DATE: 10/29/08	FIRST USE: 5577-0	
APPROVED BY: SS	DATE: 10/29/08	PART NO. 0H1256	REV. G
RELEASED FOR PRODUCTION BY: SAEID SHOKRZADEH	DATE: 10/29/08		