R-200C Digital Controller

TECHNICAL MANUAL

A new standard of reliability

This manual should remain with the unit.

SAVE THESE INSTRUCTIONS – The manufacturer suggests that these rules for safe operation be copied and posted in potential hazard areas. Safety should be stressed to all operators and potential operators of this equipment.

Study these SAFETY RULES carefully before installing, operating, or servicing this equipment. Become familiar with this manual and all literature pertaining to the generator set and related equipment. This equipment can operate safely, efficiently, and reliably only if it is properly installed, operated, and maintained. Many accidents are caused by failing to follow simple and fundamental rules or precautions.

The manufacturer cannot anticipate every possible circumstance that might involve a hazard. The warnings in this manual, and on tags and decals affixed to the equipment, are, therefore, not all-inclusive. If using a procedure, work method, or operating technique the manufacturer does not specifically recommend, ensure that it is safe for others. Also make sure the procedure, work method, or operating technique utilized does not render the equipment unsafe.

GENERAL HAZARDS

- For safety reasons, the manufacturer recommends that this equipment be installed and serviced by an Authorized Service Dealer or other qualified electrician or installation technician who is familiar with applicable codes, standards, and regulations. The operator also must comply with all such codes, standards, and regulations.
- When working on this equipment, remain alert at all times. Never work on the equipment when physically or mentally fatigued.
- Inspect the equipment regularly, and promptly repair or replace all worn, damaged or defective parts, using only factory-approved parts.
- Before performing any maintenance on the generator or any related equipment, disconnect the generator's battery cables and remove panel fuse to prevent accidental startup. Disconnect the cable from the battery post, indicated by a NEGATIVE, NEG, or (–) first. Reconnect that cable last.

ELECTRICAL HAZARDS

- Generators produce dangerous electrical voltages and can cause fatal electrical shock. Avoid contact with bare wires, terminals, connections, etc., while the generator and related equipment are running. Ensure all appropriate covers, guards, and barriers are in place before operating the equipment. If working around an operating unit, stand on an insulated, dry surface to reduce potential shock hazards.
- Do not handle any kind of electrical device while standing in water, while barefoot, or while hands or feet are wet. DANGEROUS ELECTRICAL SHOCK MAY RESULT.
- If people must stand on metal or concrete while installing, operating, servicing, adjusting, or repairing this equipment, place insulative mats over a dry wooden platform. Work on the equipment only while standing on such insulative mats.
- Wire gauge sizes of electrical wiring, cables, and cord sets must be adequate to handle the maximum electrical current (amperage) to which they will be subjected to.
- Before installing or servicing this equipment, make sure that all power voltage supplies are positively turned off at their source. Failure to do so will result in hazardous and possibly fatal electrical shock.
- When installed with an automatic transfer switch, the generator may crank and start anytime, without warning. To prevent injuries caused by sudden start-up, disable the generator's automatic start circuit before working on, or around, the unit. Then, place a "Do Not Operate" tag on the generator control panel and on the transfer switch.
- In case of an accident caused by electric shock, immediately shut down the source of electrical power. If this is not possible, attempt to free the victim from the live conductor. AVOID DIRECT CONTACT WITH THE VICTIM. Use a nonconducting implement, such as, a rope or board, to free the victim from the live conductor. If the victim is unconscious, apply first aid and get immediate medical help.
- Never wear jewelry when working on this equipment. Jewelry can conduct electricity, resulting in electric shock, or may get caught in moving components, causing injury.

FIRE HAZARDS

- For fire safety, the generator and related equipment must be installed and maintained properly. Installation always must comply with applicable codes, standards, laws, and regulations. Adhere strictly to local, state, and national electrical and building codes. Comply with regulations the Occupational Safety and Health Administration (OSHA) has established. Also, ensure that the equipment is installed in accordance with the manufacturer's instructions and recommendations. Following proper installation, do nothing that might alter a safe installation and render the unit in noncompliance with the aforementioned codes, standards, laws, and regulations.

Table of Contents

Safety Rules ..... Inside Front Cover
Table of Contents 1
General Information 2
Introduction 2
Control Board Dip Switch Settings 2
Generator Operation 3
Utility Failure 3
Manual Mode 3
Auto Mode 3
Exercise Mode 5
Utility Restored 5
Initial Cranking 5
Active Alarm 5
Re-crank 5
Normal Exercise Mode 5
Low Speed Exercise 5
Auto Start 6
Manual Start 6
System Ready (Green LED Indicator) 6
Low Fuel Pressure (Yellow LED Indicator) 6
Low Battery (Red LED Indicator) 6
Low Oil Pressure (Red LED Indicator) 6
High Coolant Temp (Red LED Indicator) 7
Low Coolant Level (Flashing Red High Coolant Temp LED Indicator) 7
Overspeed (Red LED Indicator) 7
RPM Signal Failure (Flashing Red Overspeed Indicator, Slow/Fast) 7
RPM Signal Failure During Cranking 7
RPM Signal Failure During Running 7
Overcrank (Red LED Indicator) 7
Alarm Cancel 7
Automatic Transfer Switch (ATS Mode) 7
Engineered Transfer Switch (2-wire Start GTS Mode) 8
Voltage Regulator Adjustment 10
R-200C J1 Connector (23 Pin, Gray=1800 rpm, White=3600 rpm) 10
R-200C J2 Connector (14 Pin White) 10
2.5A Battery Charger 10
Hourmeter 11
Notes 12

INTRODUCTION

The R-200C Controller incorporates the generator control circuitry, the ignition coil driver circuitry, and the interface circuitry to an external governor driver. The controller is designed to provide independent ignition coil drive for each cylinder.

The R-200C Controller can control a:

- 4-cylinder, 2.4L, 1800 rpm or 3600 rpm engine

The R-200C controller will monitor the utility voltage to determine if stand-by power is required. Should the utility voltage fail, the unit will start and run, detaching from the utility and supplying the customer load from the generator.

Speed and timing information for the controller is provided by two magnetic pick-ups mounted on the generator. The one mounted on the flywheel housing provides engine RPM from the flywheel. The one mounted on the engine front cover provides position information from the camshaft sprocket.

These generators are field configurable for either LP vapor or Natural Gas (NG). See the generator manual for details.

The output frequency of the 22/27kW generator can be set to either 50 Hz or 60 Hz. This is accomplished via a DIP switch on the controller PCB. The generator output rating is lower for 50 Hz. The setting should be set and verified at installation and not changed after that time.

CONTROL BOARD DIP SWITCH SETTINGS

The Switch "ON" position location is marked on the DIP switch housing (see Figure 1). To activate the DIP Switch settings place the AUTO/OFF/MANUAL switch in the OFF Mode, make the DIP switch changes and then push and hold the Set Exercise Switch for five seconds.

DIP Switch Position 1: Selects the generator output frequency. When OFF, standard 60 Hz operation is selected. When ON, 50 Hz is selected if the generator is capable.

DIP Switch Position 2: Selects the type of transfer switch to be used with the generator. When an "HS" or RTS-type transfer switch is used (ATS Mode) this DIP Switch should be in the OFF Position. When a W-type transfer switch is used (GTS Mode) the generator 2-wire start inputs can be used to control the generator operation. The 2-wire start inputs are labeled as 178 and 183 on the wiring terminals inside the generator's customer connection panel.

DIP Switch Position 3: Selects the engine operating speed in exercise mode. When OFF, low speed exercise is selected. When ON, the exercise runs at normal engine speed.

DIP Switch Position 4: Selects the generator fuel type. When OFF, the generator should be using LP vapor fuel. When ON, natural gas fuel should be used.

DIP Switch Position 5: Reserved for future use. The position of this DIP switch does not affect generator operation.

DIP Switch Position 6: Selects the alternator kW rating. When ON, 36kW turbocharged is selected for 1800 rpm and 60kW turbocharged is selected for 3600 rpm. When OFF, 22kW or 27kW is selected for 1800 rpm and 45kW is selected for 3600 rpm.

DIP Switch Position 7: Reserved for future use. The position of the DIP switch does not affect generator operation.

DIP Switch Position 8: Reserved for future use. The position of this DIP switch does not affect generator operation.

	Switch OFF	Switch ON
Position 1	60 Hz	50 Hz (where applicable)
Position 2	ATS Mode	GTS Mode
Position 3	Low Speed Exercise	Normal Speed Exercise
Position 4	LP Vapor Fuel	Natural Gas Fuel
Position 5	Reserved	Reserved
Position 6	22/27kW (1800 rpm) 45kW (3600 rpm)	36kW Turbo (1800 rpm) 60kW Turbo (3600 rpm)
Position 7	Reserved	Reserved
Position 8	Reserved	Reserved

Figure 1 — Dip Switch Settings

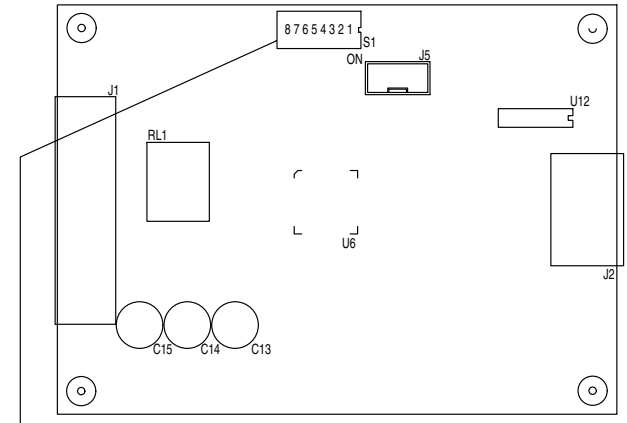

S1 Switch Settings

POS	OFF	ON	DESCRIPTION
1	60 Hz	50 Hz	FREQUENCY
2	ATS	GTS	TRANSFER SW. MODE
3	LOW SPD	NORMAL	EXERCISE MODE
4	LP	NG	FUEL TYPE
5			RESERVED
6	22/27/45kW	36/60kW	kW RATING
7			RESERVED
8			RESERVED

CAUTION

If the DIP switch settings are not set correctly, the generator engine may run rough, not start or not provide rated power.

LED Indicators visible through front panel (see Table 1 and Figure 2).

Table 1

• System Ready	Green LED
• Low Fuel Pressure	Yellow LED
• Low Battery	Red LED
• Low Oil Pressure	Red LED
• Hi Coolant Temp/Low Coolant Level	Red LED
• Over Speed/RPM Sensor Loss	Red LED
• Over Crank	Red LED

Figure 2 — LED Indicators on Front Panel

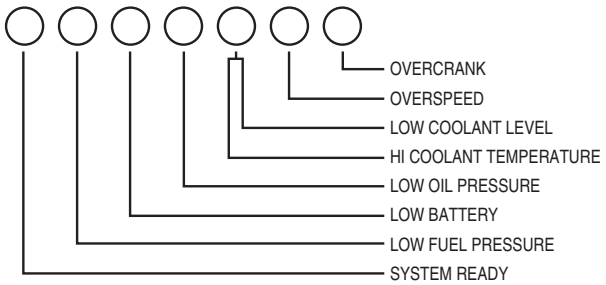

GENERATOR OPERATION

The R-200C controller monitors the front panel switch position and reads the DIP switch position settings when the control board is initially powered-up.

With the switch In the OFF position, the controller exercise timer will be keeping time; the controller will also be monitoring the battery voltage and low fuel pressure sensor.

In the MANUAL position the controller will start and run the generator.

In the AUTO position the controller will go into a "standby" mode, where the controller will monitor the utility voltage and the exercise timer, and determine if the generator needs to be started and the load transferred.

Battery voltage is continuously monitored and a warning LED is lit if the battery voltage drops below approximately 12.2 volts for longer than one (1) minute. The LED will turn off when the battery voltage goes back above approximately 12.5 volts.

If the battery voltage drops below 6V during cranking, or 8V when the generator is running, the low battery LED will stay lit.

While starting and running the engine, the controller will monitor the engine condition and shut the engine down on;

- Over Crank
- Over Speed
- High Coolant Temperature
- Low Coolant Level
- Low Oil Pressure
- Engine Speed Signal Loss/RPM Sensor Loss (the overspeed LED flashes to indicate this fault)
- Dead Battery (battery voltage < 6V during cranking or 8V when the generator is running)
- Ignition Module Fault

ENGINE TIMING				
22kW 1800	LP	18 Deg. BTDC	NG	28 Deg. BTDC
27kW 1800	LP	18 Deg. BTDC	NG	28 Deg. BTDC
45kW 3600	LP	21 Deg. BTDC	NG	30 Deg. BTDC
36kW 1800 Turbo	LP	9 Deg. BTDC	NG	16 Deg. BTDC
60kW 3600 Turbo	LP	15 Deg. BTDC	NG	19 Deg. BTDC

UTILITY FAILURE

When the utility fails, a 15 second timer will start. If the utility is still gone when the timer expires the engine will crank and start. Once started a 10 second engine warm-up timer will be initiated. When the warm-up timer expires, the R-200C controller will transfer the load to the generator (ATS Mode). The transfer of load when the generator is running is dependent upon the operating conditions as follows:

◆ MANUAL MODE

When utility is present the unit will start and run, but not transfer to standby. If running in standby (utility is lost) and utility returns above 80% of nominal for > 15 seconds, the unit will transfer to Utility and continue to run until the switch is turned OFF. If the utility drops below 60% of nominal for > 15 seconds the unit will transfer to standby.

◆ AUTO MODE

If utility is present the unit will not run or transfer. If the utility voltage drops below 60% of nominal for > 15 seconds, the unit will start, run and transfer to standby (after the 10 second warm-up). When utility returns and voltage is > 80% of nominal for > 15 seconds, the unit will transfer to utility, and will stop the engine after a one minute cool-down.

Condition	System Ready	Low Fuel	Low Bat	Low Oil	High Temp	Over Speed	Over Crank	Switch Position Manual	Auto	Off
Generator Switch is in the OFF Mode	OFF	@	X	OFF	OFF	OFF	OFF			O
System Ready for Automatic Start	ON	@	X	OFF	OFF	OFF	OFF		O	
Generator Switch is in the MANUAL Mode	OFF	@	X	OFF	OFF	OFF	OFF	O		
Weekly Exerciser is not Set (Note A)	X	@	Flashing	Flashing	Flashing	Flashing	Flashing	O	O	O
			(----------1 sec rate ----------)							
Battery Voltage <12.2V for > 1 minute	X	@	ON (Non-Latching)					O	O	O
Battery Voltage <8V	OFF	@	ON					O	O	
Unit Shutdown due To Low Oil Pressure	OFF	@	X	ON				O	O	
Unit Shutdown due To High Coolant Temp	OFF	@	X		ON			O	O	
Unit Shutdown due To Engine Overspeed	OFF	@	X			ON		O	O	
Unit Failed to Start During it's Crank Cycle	OFF	@	X				ON	O	O	
Utility Voltage is < 60% of Nominal	Flashing 1 sec rate	@	X					O	O	
Unit Shutdown due To Low Coolant Level	OFF	@	X		Flashing			O	O	
Engine Speed Signal Fault Flywheel/RPM Signal Loss	OFF	@	X			Flashing (slow)		O	O	
Engine Speed Signal Fault Cam/RPM Signal Loss	OFF	@	X			Flashing (fast)		O	O	
Control Board is In GTS Mode	Flashing 5 sec ON, 1 sec OFF	@	X					O	O	O

@ = Low Fuel Pressure is a Yellow LED and will be ON when fuel pressure is less than 5 inches Water Column
X = indicates that the LED can be ON or OFF depending on the Operating Mode (i.e. Manual, OFF or Auto)
Note A: a RED LED fault indication has priority over the flashing LED's used to indicate exercise time not set

◆ EXERCISE MODE

The unit will not exercise if the generator is already running (in manual or auto mode). The generator will only transfer if the utility fails during the exercise period for >15 seconds, and the switch is in the AUTO mode above.

UTILITY RESTORED

When the utility returns, a 15 second timer will start. At the completion of this time, if the utility supply has been above 80% of nominal voltage for the previous 15 seconds, the control will transfer the load back to the utility. When the load is transferred a one (1) minute cool down timer will start, after which the engine will be shutdown.

INITIAL CRANKING

The initial crank cycle will be a 15 second crank followed by a seven (7) second rest. This will be followed by 5 additional cycles of seven (7) second cranks followed by seven (7) second rests. If the engine still fails to start, the overcrank LED will be illuminated.

Based on the above, the maximum number of engine crank events is six (6), which is approximately 90 seconds, prior to illuminating the overcrank LED.

ACTIVE ALARM

Low Oil Pressure, High Coolant Temp, Low Coolant Level, Overspeed, Overcrank, Engine Speed Signal Loss and a Dead Battery indication will all be latched shutdowns. In the event one of these conditions occurs, the unit will be shut down, the appropriate LED will be illuminated, and the unit will not start again without manual intervention (see Re-Crank below).

RE-CRANK

In the AUTO mode only, if an engine speed signal failure occurs while the generator is running the engine will shutdown and then attempt a re-crank. A maximum of two re-cranks will be attempted after which the overcrank LED will be set. If the engine speed signal failure occurred during the engine exercise mode the exercise timer is reset.

NORMAL EXERCISE MODE

To select this mode, place DIP switch position 3 in the ON position.

In Normal Exercise Mode the generators will exercise at their normal running speed.

The R-200C controller will start and run the generator once every seven (7) days for approximately 12 minutes. If the utility fails during the exercise period, this exercise period is aborted and the R-200C Controller transfers the load to the generator output, assumes automatic operation and continues to run until the utility is returned.

The weekly exercise cycle is set as follows:

1. Place the AUTO/OFF/MANUAL switch in the AUTO position.
2. Press and hold the "Set Exercise Time" switch for five (5) seconds and then release.

At this time all five (5) red LED's will flash for 10 seconds, then the engine will start and run for it's 12 minute exercise period, then shut down. The generator will now start and run each week at approximately the same time.

If battery power to the R-200C Controller is lost, the weekly exercise time setting will be lost. This is indicated by all five (5) red LED's continually flashing in ATS mode. In this state the generator will still start and run in MANUAL mode, or automatically start and run if utility voltage is lost while in AUTO mode, but it will NOT perform a weekly exercise cycle.

In the event of a failure while running in this mode, the five (5) red LED's will stop flashing, the individual fault LED will turn on and the engine will be shut down. Once the AUTO/OFF/MANUAL switch is switched to OFF, the individual fault LED will turn off and the five (5) red LED's will begin flashing to show that the exercise mode has not yet been set.

LOW SPEED EXERCISE

To select this mode place DIP switch position 3 in the OFF position.

In Low Speed Exercise mode the normal speed 3600 rpm generators will exercise at 2100 rpm. The normal 1800 rpm generators will exercise at 1400 rpm in this mode.

If the utility fails during the low speed exercise period, a 10 second timer will start. If the utility returns to a normal operating level, during this 10 second time interval the low speed exercise operation will continue. If the utility is still not present (i.e. utility voltage less than 60% of nominal) when the above 10 second timer expires then the low speed exercise mode is terminated and the engine will ramp up to its normal running speed within five (5) seconds. If the utility returns during the five (5) second ramp-up period the generator will terminate the exercise mode. If the utility is still not present, once the generator is up to its normal running speed, then the controller will transfer the load to the generator. When the utility returns the generator will shutdown.

If battery power to the R-200C Controller is lost, the weekly exercise time setting will be lost. This is indicated by all 5 red LED's continually flashing in ATS mode. In this state the generator will still start and run in MANUAL mode, or automatically start and run if utility voltage is lost while in AUTO mode, but it will NOT perform a weekly exercise cycle.

In the event of a failure while running in this mode, the five (5) red LED's will stop flashing, the individual fault LED will turn on and the engine will be shut down. Once the AUTO/OFF/MANUAL switch is switched to OFF, the individual fault LED will turn off and the five (5) red LED's will begin flashing to show that the exercise mode has not yet been set.

AUTO START

This unit is designed to automatically start in the event of a utility failure. A utility failure is defined as the utility voltage being less than approximately 60% of nominal, while the utility is considered good when it is restored to approximately 80% of its nominal value.

If the generator is already running under exercise when an auto start is required, it will simply transfer the load after a 15 second delay and then switch to auto operation.

DANGER

With the switch set to AUTO, the engine can crank and start suddenly without warning. Such automatic start up normally occurs when utility source voltage drops below a pre-set level. To prevent possible injury that might be caused by such sudden starts, set the AUTO/ OFF/MANUAL switch to OFF and remove the NEGATIVE battery cable from the battery before working on or around the unit. Then, place a "DO NOT OPERATE" tag on the control console.

MANUAL START

Allows the user to start and run the generator manually. Transfer of the load to the generator will occur if the utility is lost while the engine is running in the manual mode.

SYSTEM READY (GREEN LED INDICATOR)

Is a positive status indicator and dependent upon the following conditions being true:

1. Switch in the AUTO position.
2. No other warning indicator present.
3. Controller is functional.

The System Ready LED will also indicate if utility voltage is present at the control board. The system ready LED will flash every second (at a 0.5 second ON and a 0.5 second OFF rate) when utility voltage is not present at the control board when the switch is in either the AUTO or MANUAL position. This function is ONLY available with DIP Switch Position 2 in the OFF position (ATS application).

The system ready LED will also indicate if the generator is in the GTS Mode (i.e. DIP Switch Position 2 in the ON Position). The system ready LED will flash at a five (5) seconds ON and one (1) second OFF rate in GTS Mode.

LOW FUEL PRESSURE (YELLOW LED INDICATOR)

The yellow low fuel pressure LED will turn ON if the fuel supply pressure drops below approximately five (5) inches water column (i.e. occurs when the low fuel pressure sensing switch on the fuel regulator opens). This is a non-latched fault (visual LED warning only) and does not trigger the controller alarm output. Low fuel pressure sensing is active in all generator operating modes (i.e. MANUAL, OFF and AUTO).

LOW BATTERY (RED LED INDICATOR)

The R-200C controller continually monitors the battery voltage and turns on the low battery LED if the battery voltage falls below approximately 12.2VDC for one minute. A low battery voltage is a non-latching alarm and will not shut down the engine, however, it is a possible indication of a potential issue with the battery or battery charger and should be investigated.

The low battery LED will automatically turn off if the battery voltage rises above approximately 12.5VDC. If the engine is running when the low battery condition occurs, the engine will continue to run as long as possible.

If the battery voltage drops below 6V at any time during cranking, or 8V when the generator is running, the crank cycle will be terminated and the low battery LED will remain lit. This is a latched fault and will shut down the engine.

LOW OIL PRESSURE (RED LED INDICATOR)

Occurs if the oil pressure switch closes while the engine is running after the 10 second hold off timer expires. This is a latched fault and will shutdown the engine.

HIGH COOLANT TEMP (RED LED INDICATOR)

Occurs if the high coolant temp sensor indicates a fault. Checks are made after the 10 second hold off timer expires. This is a latched fault and will shutdown the engine.

LOW COOLANT LEVEL (FLASHING RED HIGH COOLANT TEMP LED INDICATOR)

Occurs if the coolant level is low. Checks are made after the 10 second hold off timer expires. This is a latched fault and will shutdown the engine.

OVERSPEED (RED LED INDICATOR)

An overspeed shutdown will occur if the engine speed is greater than 4320 rpm for a 3600 rpm engine, or 2160 rpm for an 1800 rpm engine for three (3) seconds. An overspeed condition will shutdown the engine and activate the over speed LED. An immediate overspeed shutdown will occur if the engine speed is greater than 4500 rpm for a 3600 rpm engine, or 2250 rpm for an 1800 rpm engine.

RPM SIGNAL FAILURE (FLASHING RED OVERSPEED INDICATOR, SLOW/FAST)

If the R-200C controller does not receive a signal from the engine flywheel sensor, the R-200C controller cannot maintain the generator output frequency or monitor for an overspeed condition. If this signal is lost the R-200C controller will shut down the engine as follows:

- A slow flashing overspeed red LED indicates a Flywheel sensor fault.
- A fast flashing overspeed red LED indicates a Cam sensor fault.

◆ RPM SIGNAL FAILURE DURING CRANKING

The engine control board (R-200C controller) will monitor the engine speed signal during engine cranking. If the control board does not see a valid signal within the first four seconds of each crank cycle it will stop the crank cycle, lock out on a shut down fault and flash the overspeed LED.

◆ RPM SIGNAL FAILURE DURING RUNNING

Running mode is handled differently because there is always the possibility the engine could slow down or stop running due to a temporary overload. To avoid shutting down and latching out on a temporary problem the following is done. If the engine is up and running, and the control board stops receiving a valid engine speed input signal it will respond as follows:

1. It will close the throttle.
2. It will shut down the engine by turning off the fuel supply.
3. It will wait for 15 seconds to ensure the engine has stopped.
4. It will then energize the starter and monitor the engine speed signal.
   A. If the control board does not see the engine speed signal it will stop the crank cycle, lock out on fault, and flash the overspeed LED.
   B. If the control board does see the engine speed input signal during cranking it will start and run the engine normally. If the engine speed signal is again lost while running it will repeat the above procedure one more time.
   C. If the failure should repeat a third time, the control board will shut down the engine, lock out on fault, and flash the over speed LED.

OVERCRANK (RED LED INDICATOR)

Occurs if the engine has not started within the total 90 second crank cycle. This is a latched fault and will shut down the engine.

ALARM CANCEL

When the generator is shut down on a latched fault or latching alarm, the AUTO/OFF/MANUAL switch must be set to the OFF position to turn off the corresponding fault LED. Prior to moving the switch to the OFF position, record which LEDs are ON or FLASHING and the date on the back cover of this manual.

AUTOMATIC TRANSFER SWITCH (ATS MODE)

When this generator, along with an RTS-type or HS-type automatic transfer switch has been installed and connected, a circuit board in the generator control panel constantly monitors the utility voltage and controls the operation of the transfer switch.

To implement this mode of operation, Position 2 of the eight-position DIP switch, which is located on the generator circuit board (see Figure 1), must be in the OFF position. In ATS Mode utility voltage sensing, weekly exercising, and load transferring is under the control of the generator.

Should the utility voltage drop below a preset value, and remain at this low voltage for a preset amount of time, the generator cranks and starts. After the generator starts, the transfer switch transfers the load circuits to the generator so the generator can power them. When the utility source voltage has been restored, the transfer switch re-transfers the load circuits back to the utility source voltage and the generator shuts down.

The transfer switch is controlled by the generator circuit board via control wires 23 and 194. Wire 23 connects the collector of an NPN transistor on the generator circuit board to the “low side” (Terminal 23) of the transfer relay coil in the transfer switch. Wire 194 connects positive battery voltage from the generator circuit board to the “high side” (Terminal 194) of the transfer relay coil in the transfer switch.

In order for the generator utility voltage sensing function to work, it is necessary to provide a 5 amp fused 240VAC for 240V or 480V systems or 208VAC utility source connection (depending on the generator being used) from the transfer switch main N1 and N2 terminals to the generator wiring panel N1 and N2 terminals (See Figure 3).

CAUTION

Be very careful when connecting high-voltage wires labeled N1 and N2 and low-voltage wires labeled 23 and 194 in both the generator wiring panel and the transfer switch wiring panel. The control board will be damaged if these wires are not connected correctly.

In order for the generator battery charger function to work, it is necessary to provide a 120VAC utility source connection to the generator wiring panel LINE, NEUTRAL and GND terminals (see Figure 3).

ENGINEERED TRANSFER SWITCH (2-WIRE START GTS MODE)

When required, the generator can be installed with an engineered W-type transfer switch which controls utility voltage sensing, weekly exercising and load transferring.

When Position 2 of the eight-position DIP switch, which is located on the generator circuit board (see Figure 1), is in the ON position then utility voltage sensing, weekly exercising and load transferring is under the control of the engineered W-type transfer switch (GTS Mode).

Generator control board DIP switch position 2 ON = 2-wire Start GTS Mode:

- The generator control board will NOT monitor the utility.

Figure 3 - Connection Diagram (ATS Mode)

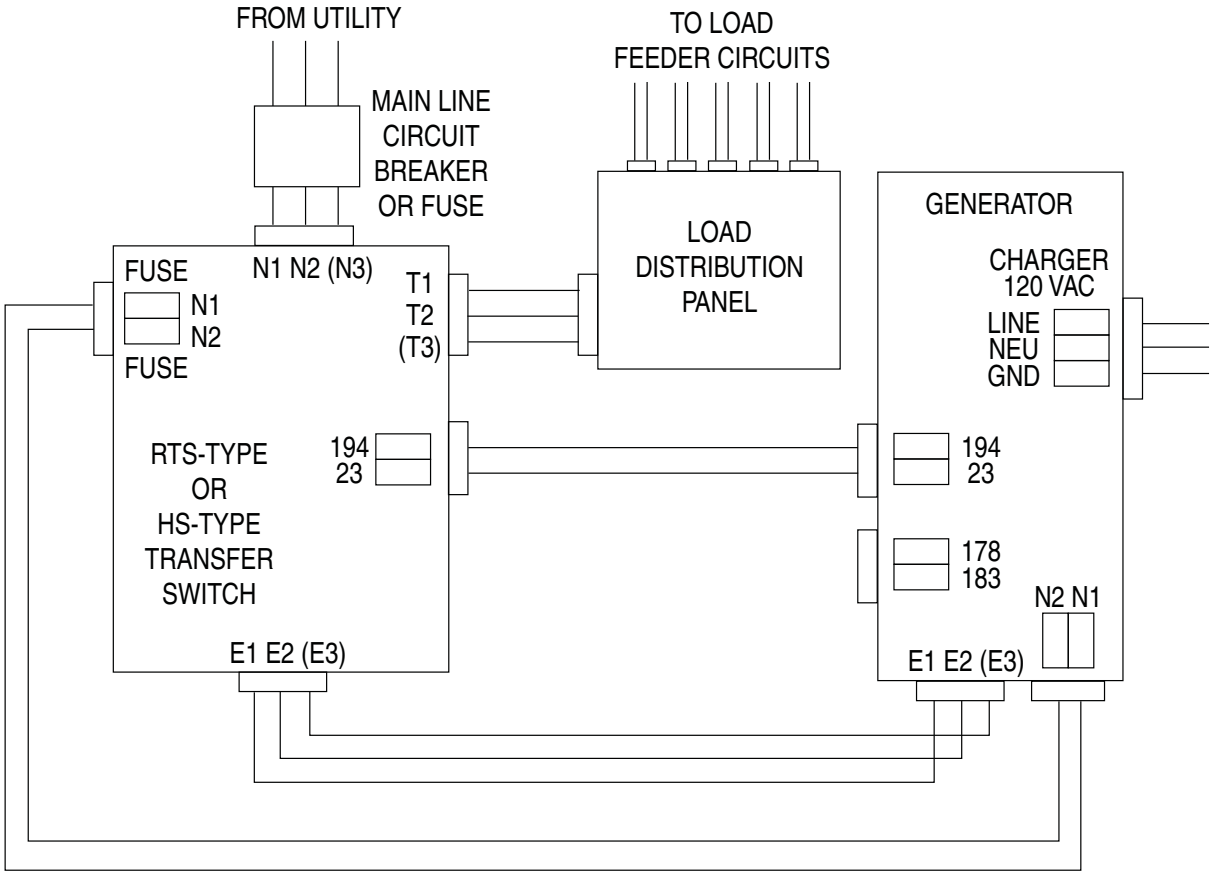

- The generator control board will NOT perform a weekly exercise. (In GTS mode the green system ready LED will be ON for five (5) seconds and OFF for one (1) second).
- The generator control board will NOT activate the transfer output.
- The generator control board WILL monitor all engine conditions and shut down on all the faults listed in this document.

For the W-type transfer switch to control utility voltage sensing, weekly exercising and load transferring, suitable wiring must also be connected from the transfer switch 178 and 183, 2-wire start terminals to the corresponding generator 178 and 183 2-wire start terminals. Recommended wire gauge sizes for the 2-wire start wiring depend on the length of the wire (see wiring length chart).

MAXIMUM WIRE LENGTH	RECOMMENDED WIRE SIZE
460 feet (140M)	No. 18 AWG.
461 TO 730 feet (223M)	No 16 AWG.
731 to 1,160 feet (354m)	No 14 AWG.
1,161 to 1,850 feet (565m)	No 12 AWG.

Route the 2-wire start control wires through suitable, approved conduit which is separate from the AC power leads. Connection of wire 178 to wire 183 by relay contact closure action (volt free switch contacts) in the transfer switch must result in generator engine cranking and startup (see Figure 4).

CAUTION

Do NOT connect battery voltage, utility voltage (N1/N2) or load voltage (T1/T2) to either the 178 or the 183 2-wire start terminals as this will damage the generator control board.

Figure 4 - Connection Diagram (GTS Mode)

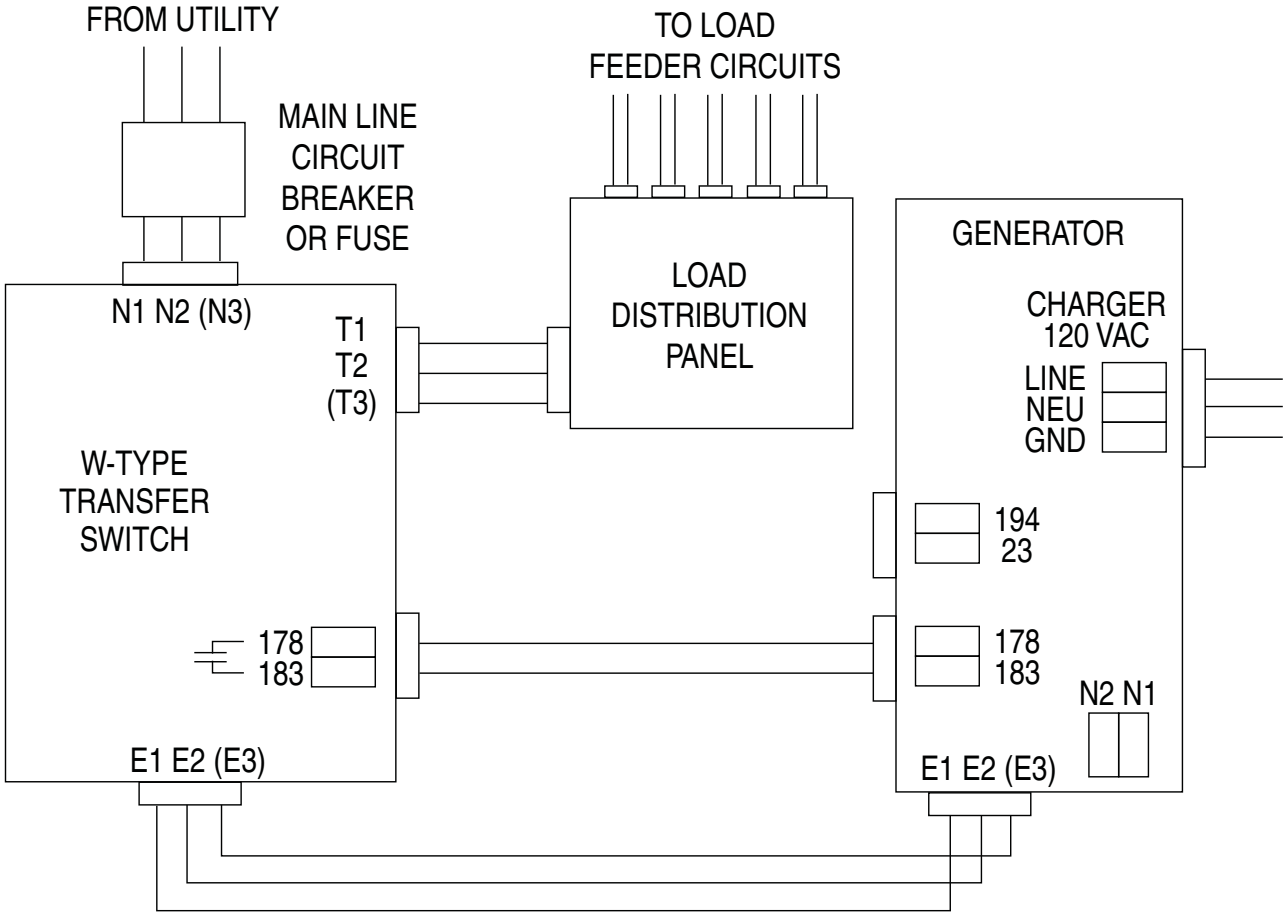

In order for the generator battery charger function to work, it is necessary to provide a 120Vac utility source connection to the generator wiring panel LINE, NEUTRAL and GND terminals (see Figure 4).

When in GTS mode, the control board will respond as follows based on the AUTO/OFF/MANUAL switch position.

OFF: The generator will not start and run in this position. Only the System Ready LED and the Low Battery LED are active in the GTS OFF mode.

MANUAL: The control board will start and run the generator whenever the switch is in the manual position.

AUTO: The control board will monitor the 2-wire start circuit. When the 2-wire start wire 178 is connected to 2-wire start wire 183, via a relay contact closure in the W-type transfer switch, the control board will start and run the generator. When the 2-wire start wire connection is opened the control board will stop the generator.

When the control board is in AUTO, MANUAL or OFF (GTS mode) the GREEN System Ready LED will flash (five (5) seconds ON, one (1) second OFF) to indicate that the transfer switch is performing the utility monitoring and transfer functions.

VOLTAGE REGULATOR ADJUSTMENT

Although adjustment potentiometers are provided on the voltage regulator installed in the control panel, the voltage regulator potentiometers have been set at the factory. If adjustment is necessary, refer to PIB08-14-S.

◆ R-200C J1 CONNECTOR (23 PIN, GRAY=1800RPM, WHITE=3600RPM)

Pin #

1 Governor 12V Supply
2 Oxygen Sensor Return (when equipped)
3 GND-B to Governor Driver
4 Hi-Coolant Temp Input
5 0V to Governor Driver
6 5V Supply to Governor Driver
7 Coil D Driver
8 Low Coolant Level Input
9 Flywheel Signal Input
10 Flywheel Signal Return
11 Low Fuel Pressure Input
12 Governor Position Feedback Input
13 Oxygen Sensor Input (when equipped)
14 Coil + (supply voltage to coils)
15 Coil A Driver
16 CAM Signal Return
17 CAM Signal Input
18 Governor PWM Output
19 CAM Sensor Screen
20 Lo Oil Pressure Input
21 Flywheel Sensor Screen
22 Coil C Driver
23 Coil B Driver

◆ R-200C J2 CONNECTOR (14 PIN WHITE)

Pin #

1 Air/Fuel Solenoid Output (when equipped)
2 Start (Crank) Relay Driver Output (minimum coil resistance is 90 ohms)
3 Fuel (Run) Relay Driver Output (minimum coil resistance is 90 ohms)
4 2-wire Start Input (from relay contact in W-type transfer switch)
5 Momentary Open Switch Input (B+)
6 2-wire Start Return (from relay contact in W-type transfer switch)
7 Manual/Auto Input (+BS)
8 19.5VAC Utility Sense Input
9 Reserved
10 Transfer Switch Relay Driver Output (minimum coil resistance is 60 ohms)
11 Manual Input
12 19.5VAC Utility Sense Return
13 Emission Control Enable
14 GND-B (Battery Ground)

CAUTION

⚠ **Refer to the individual generator wiring diagrams and schematics for additional information.**

2.5A BATTERY CHARGER

The 2.5 Amp battery charger is a "float" type charger. A "float" type charger will charge the battery at its maximum output current rating until the battery voltage reaches a "float" voltage and then the charge current will decrease to maintain the battery at that "float" voltage.

DANGER

Storage batteries give off explosive hydrogen gas. This gas can form an explosive mixture around the battery for several hours after charging. The slightest spark can ignite the gas and cause an explosion. Such an explosion can shatter the battery and cause blindness or other injury. Any area that houses a storage battery must be properly ventilated. Do not allow smoking, open flame, sparks or any spark producing tools or equipment near the battery.

Battery electrolyte fluid is an extremely corrosive sulfuric acid solution that can cause severe burns. Do not permit fluid to contact eyes, skin, clothing, painted surfaces, etc. Wear protective goggles, protective clothing and gloves when handling a battery. If fluid is spilled, flush the affected area immediately with clear water.

Do not use any jumper cables or booster battery to crank and start the generator engine. If the battery has completely discharged, remove it from the generator for recharging.

WARNING

Be sure the AUTO/OFF/MANUAL switch is set to the OFF position, before connecting the battery cables. If the switch is set to AUTO or MANUAL, the generator can crank and start as soon as the battery cables are connected.

Be sure the utility power supply to the battery charger is turned off, or sparking may occur at the battery posts as the cables are attached and cause an explosion.

HOURMETER

The front panel hourmeter is a real-time clock that displays generator run time in hours and tenths of hours. This meter is active whenever the generator is run and is not able to be reset. It provides a convenient and accurate reference for routine maintenance logs.

NOTES

NOTES