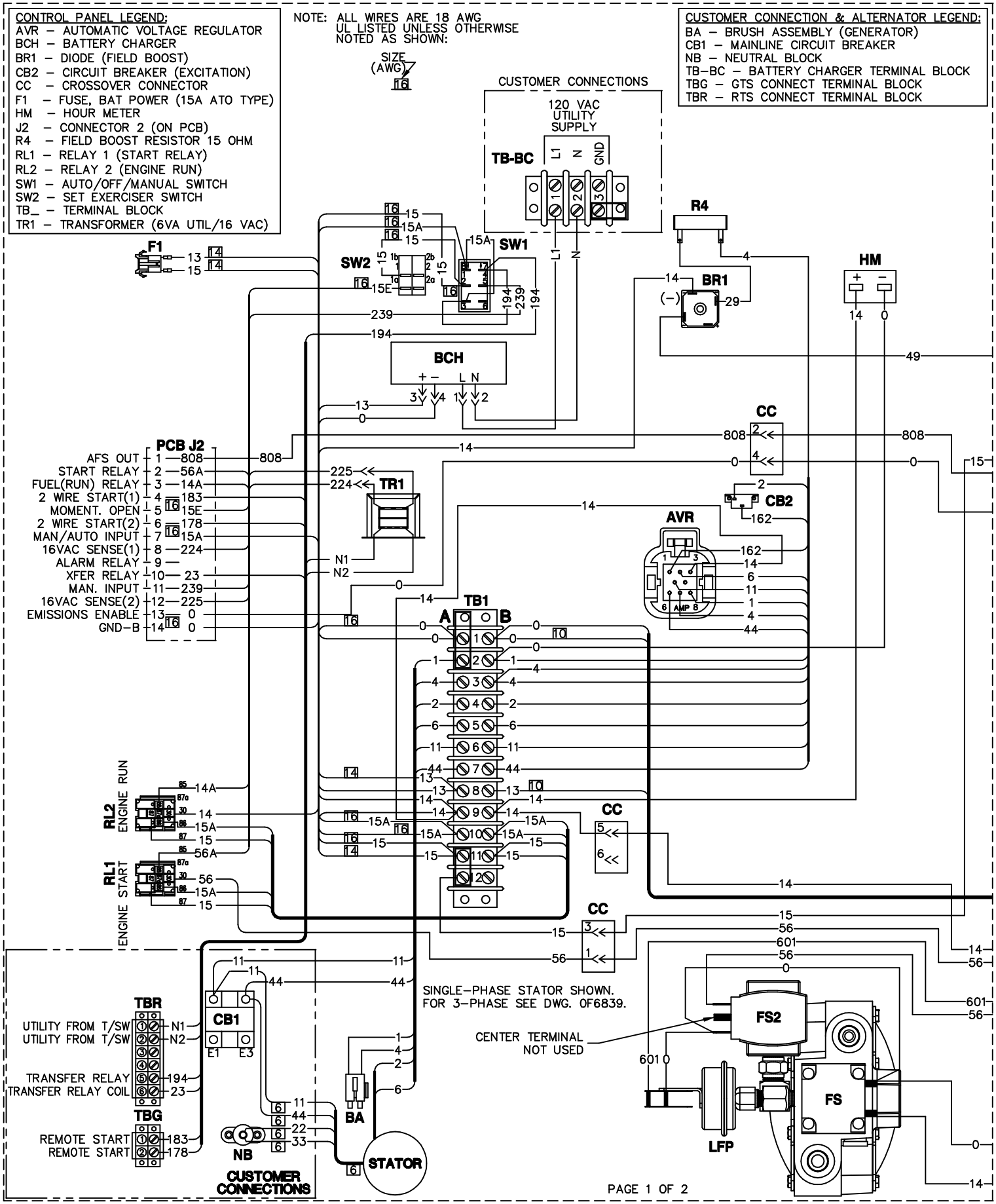

WIRING - DIAGRAM

2.4L R-200C

DRAWING #: 0H1273

REVISION: H-3590-B

DATE: 12/04/08

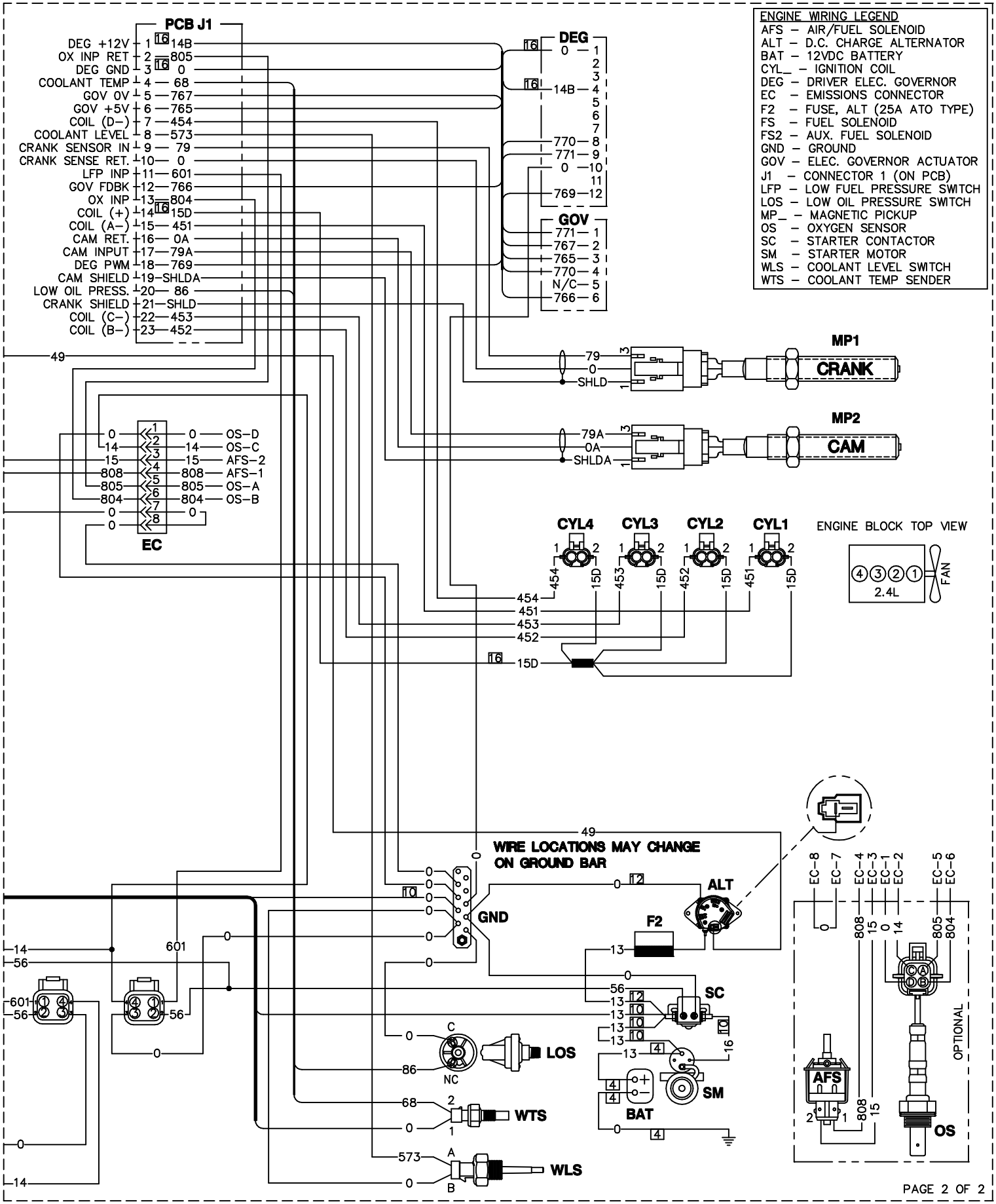
PCB J1
DEG +12V 1 16 14B
OX INP RET 2 16 805
DEG GND 3 16 0
COOLANT TEMP 4 68
GOV 0V 5 767
GOV +5V 6 765
COIL (D–) 7 454
COOLANT LEVEL 8 573
CRANK SENSOR IN 9 79
CRANK SENSE RET. 10 0
LFP INP 11 601
GOV FDBK 12 766
OX INP 13 16 804
COIL (+) 14 15D
COIL (A–) 15 451
CAM RET. 16 0A
CAM INPUT 17 79A
DEG PWM 18 769
CAM SHIELD 19 SHLDA
LOW OIL PRESS. 20 86
CRANK SHIELD 21 SHLD
COIL (C–) 22 453
COIL (B–) 23 452
DEG
16 0 1
2
3
16 14B 4
5
6
7
770 8
771 9
0 10
11
769 12
GOV
771 1
767 2
765 3
770 4
N/C 5
766 6
ENGINE WIRING LEGEND
AFS – AIR/FUEL SOLENOID
ALT – D.C. CHARGE ALTERNATOR
BAT – 12VDC BATTERY
CYL_ – IGNITION COIL
DEG – DRIVER ELEC. GOVERNOR
EC – EMISSIONS CONNECTOR
F2 – FUSE, ALT (25A ATO TYPE)
FS – FUEL SOLENOID
FS2 – AUX. FUEL SOLENOID
GND – GROUND
GOV – ELEC. GOVERNOR ACTUATOR
J1 – CONNECTOR 1 (ON PCB)
LFP – LOW FUEL PRESSURE SWITCH
LOS – LOW OIL PRESSURE SWITCH
MP_ – MAGNETIC PICKUP
OS – OXYGEN SENSOR
SC – STARTER CONTACTOR
SM – STARTER MOTOR
WLS – COOLANT LEVEL SWITCH
WTS – COOLANT TEMP SENDER
MP1
CRANK
79
0
SHLD
MP2
CAM
79A
0A
SHLDA
EC
0 OS–D
14 OS–C
15 AFS–2
808 AFS–1
805 OS–A
804 OS–B
CYL4
CYL3
CYL2
CYL1
ENGINE BLOCK TOP VIEW
4 3 2 1
2.4L
FAN
454
451
453
452
15D
WIRE LOCATIONS MAY CHANGE
ON GROUND BAR
GND
ALT
F2
SC
SM
BAT
LOS
WTS
WLS
AFS
OS
OPTIONAL
EC–8
EC–7
EC–4
EC–3
EC–1
EC–2
EC–5
EC–6
808
15
0
14
805
804
601
56
PAGE 2 OF 2