GROUP D

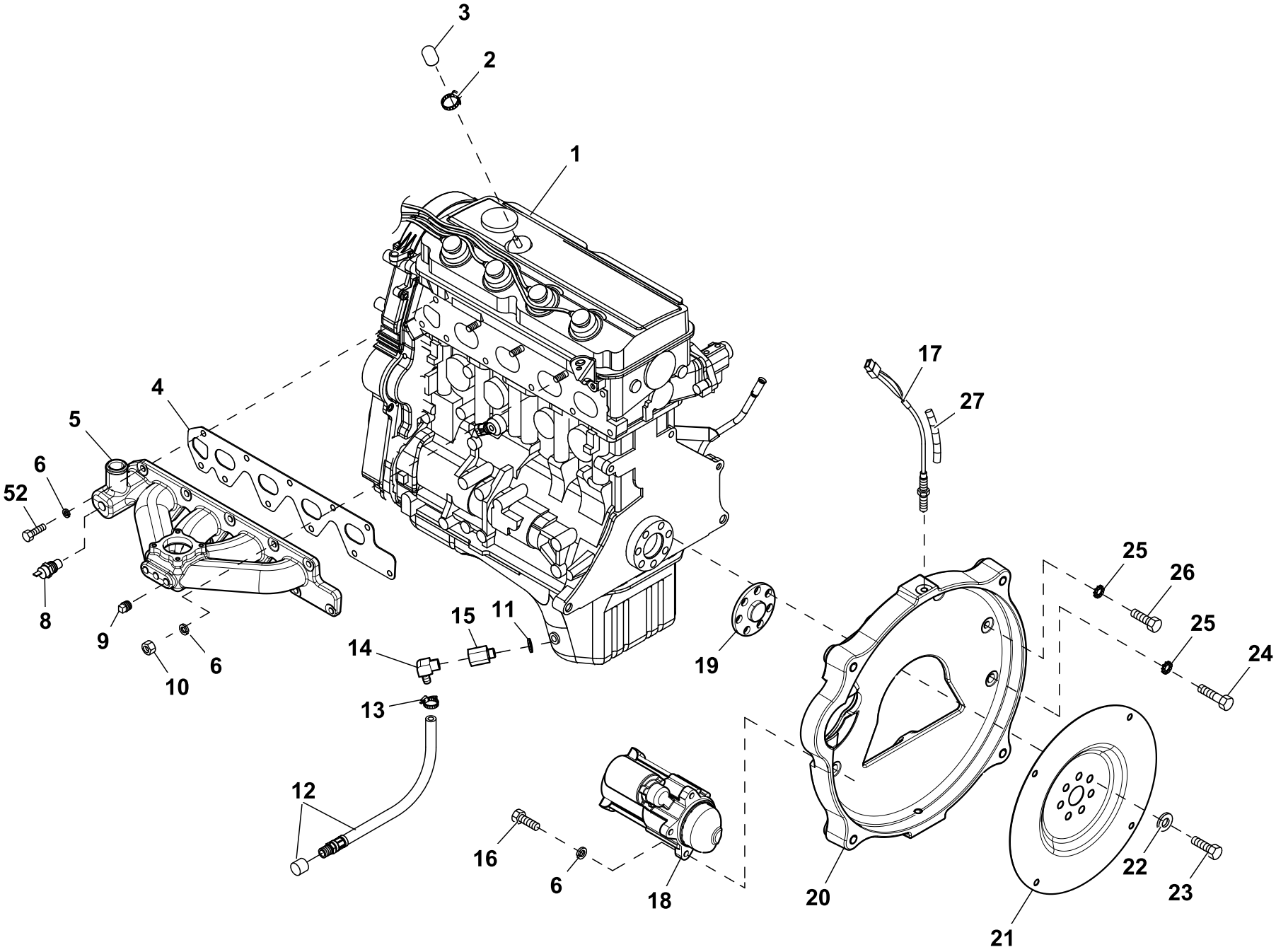
3
2
1
17
27
4
5
6
52
8
9
10
6
15
11
14
13
12
19
25
26
25
24
16
6
18
20
22
23
21

GROUP D

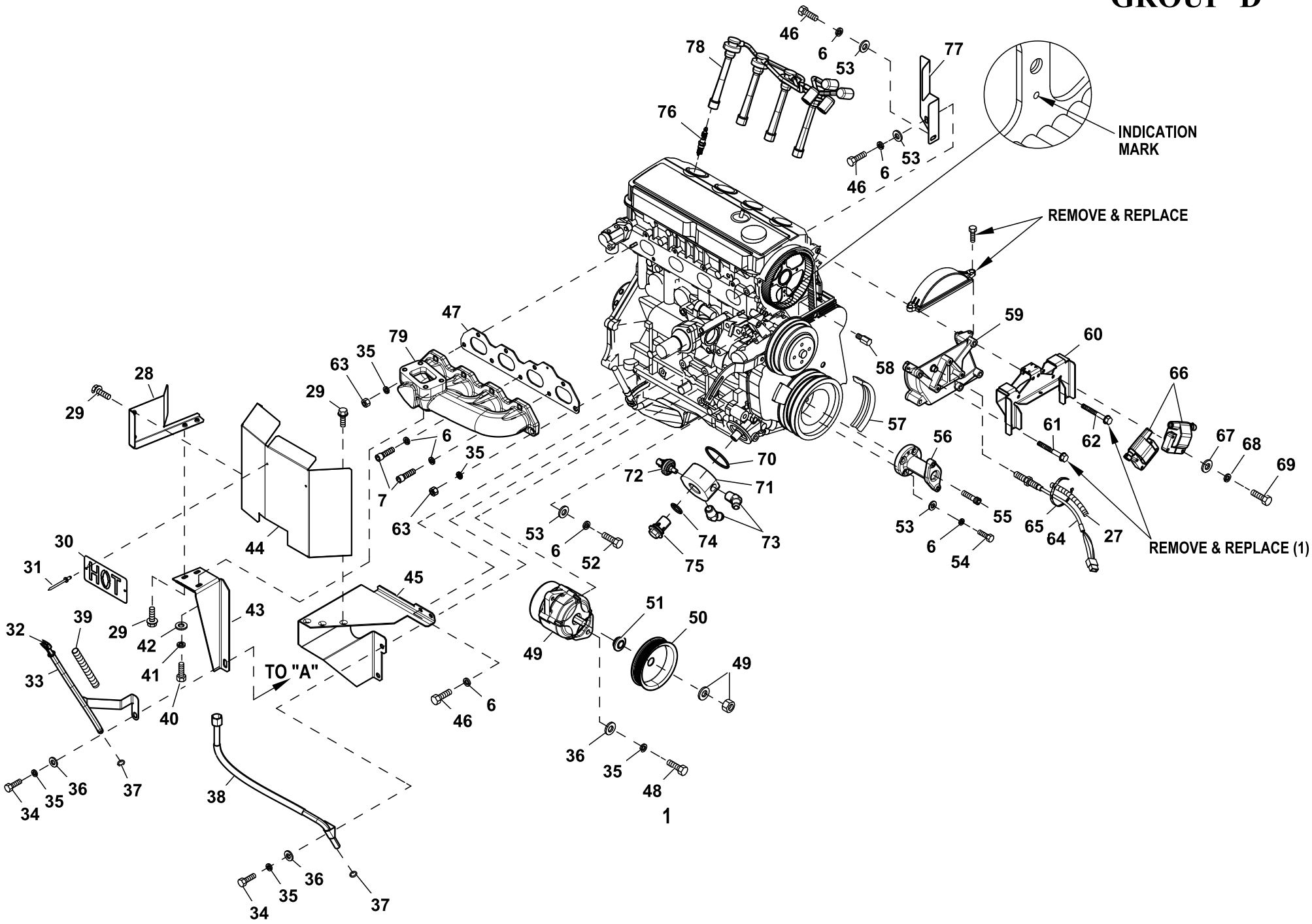

EXPLODED VIEW: ENGCOMPRT 2.4L G2 TURBO

DRAWING #:0H2647

GROUP D

APPLICABLE TO:

ITEM	PART#	QTY.	DESCRIPTION
1	0H1619	1	ENGINE 2.4L G2 CERTIFIED
2	035472	1	CLAMP HOSE #6 .43-.78
3	0G1738	1	CAP ANTIFREEZE RUBBER 9.5DIA
4	0G0950	1(REF)	GASKET INTAKE MANIFOLD G2
5	0G8488	1	MANIFOLD INTAKE (MACHINED)
6	022129	30	WASHER LOCK M8-5/16
7	058306	7	SCREW SHC M8-1.25 X 25
8	0A6751	1	SWITCH HI-TEMP 245D X 3/8NPT
	0E0502	1	TEMPERATURE SENDER, DELPHI
9	026073A	3	PLUG STD PIPE 1/4 STEEL SQ HD
10	045771	3	NUT HEX M8-1.25 G8 CLEAR ZINC
11	057772	1	WASHER NYLON .565
12	069860E	1	HOSE DRAIN ASSY 28"
13	0C7649	1	CLAMP HOSE .38-.87
14	043790A	1	BARBED EL 90 3/8NPT X 3/8 VS
15	057765	1	ADAPTER M14-1.50 X 3/8 NPT
16	049821	3	SCREW SHC M8-1.25 X 30 C12.9
17	0D2244M	1	MAGNETIC PICKUP
18	0G7461	1	MOTOR STARTER
19	0F9583	1	SPACER 2.4L G2 FLEX PLATE
20	0F9420	1	ADAPTER ENGINE
21	0G6093E	1	FLEX PLATE 2 POLE 2.4L G2
22	063076	7	WASHER FLAT .531 ID X 1.062 OD
23	0G1394	7	SCREW HHC M12-1.25 X 20 C10.9
24	052830	2	SCREW HHC M10-1.25 X 45 G8.8
25	025507	5	WASHER SHAKEPROOF EXT 7/16 STL
26	062963	3	SCREW HHC M10-1.25 X 30 G8.8
27	077043H	2	CONDUIT FLEX .25"ID
28	0G3995	1	SHIELD INNER HEAT 2.4L TURBO
29	090388	7	SCREW HHTT M6-1.0 X 12 ZINC
30	0D3701	1	PLATE "HOT"
31	0F0710	2	RIVET POP .125 X 0.337 STEEL
32	0F2664H	1	ASSY DIPSTICK W/TEXT GTH-530
33	0G8427A	1	ASSY DIPSTICK TUBE 2.4 G2
34	052213	3	SCREW HHC M10-1.25 X 20 C8.8
35	046526	6	WASHER LOCK M10
36	022131	4	WASHER FLAT 3/8-M10 ZINC
37	0G3823	2	O-RING SIZE 9.0MM X 2.0MM NITR
38	0G7902	1	TUBE TURBO OIL RETURN G2 2.4L
39	0H2574	1	CONDUIT THERMAL FLEX 13MM ID
40	047411	1	SCREW HHC M6-1.0 X 16 C8.8
41	022097	1	WASHER LOCK M6-1/4
42	022473	1	WASHER FLAT 1/4-M6 ZINC
43	0G39910ST03	1	BRACKET EXH MANIFOLD 2.4 TURBO
44	0G4000	1	HEAT SHIELD TURBO 2.4L
45	0G39970ST03	1	BRACKET HEAT SHIELD 2.4L
46	042907	4	SCREW HHC M8-1.25 X 16 C8.8
47(1)	0G0951	1(REF)	GASKET EXHAUST MANIFOLD
48	052243	1	SCREW HHC M10-1.5 X 60 G8.8
49	0E9868A	1	ALTERNATOR DC W/OUT PULLEY
50	0G0788	1	PULLEY DC ALTERNATOR (3600 RPM)
51	0F3217	1	SPACER DC ALTERNATOR PULLEY
52	0A8258	9	SCREW HHC M8-1.25 X 25 G10.9
53	022145	7	WASHER FLAT 5/16-M8 ZINC
54	039414	4	SCREW HHC M8-1.25 X 35 G8.8
55	0G0149	1	SCREW SHC M14-1.5 X 35 G10.9
56	0F9501	1	ADAPTER 2.4L CRANKSHAFT MACH
57 (1)	0G0952	1(REF)	POLY V-BELT G2 (3600 RPM)
58	0G1472A	1	CAM SENSOR PIN ASSY
59	0G1477	1(REF)	COVER CAM GEAR G2 REWORKED
60	0G8852	1	BRACKET ASM-2.4L COIL G2
61(1)	052265	1(REF)	SCREW HHC M8-1.25 X 65 C8.8
62(1)	052203	1(REF)	SCREW HHC M8-1.25 X 70 G8.8
63	046525	2	NUT HEX M10-1.25 G8 YEL CHR
64	0G3921A	1	VR SENSOR ASSY 3/8-24 LOW SENS
65	029333A	3	TIE WRAP UL 7.4"X .19" BLK

EXPLODED VIEW: ENGCOMPRT 2.4L G2 TURBO

DRAWING #: 0H2647

GROUP D

APPLICABLE TO:

ITEM	PART#	QTY.	DESCRIPTION
66	0G8853	4	COIL-2.4L G2 IGNITION
67	023897	8	WASHER FLAT #10 ZINC
68	022152	8	WASHER LOCK #10
69	034413	8	SCREW HHM #10-32 X 1-1/4
70	0G9350	1	O-RING 2.5"X 2.75"X 1/8" VITON
71	0G9329	1	ADAPTOR OIL FILTER 2.4L G2
72	0A8584	1	SWITCH OIL PRESSURE 10 PSI 2 POL (R-PANEL)
73	0G9910	2	ADAPTOR 45D JIC37 1/2NPT X ¾
74	0G9349	1	O-RING 1" X 1.25" X 1/8" VITON
75	0G9330	1	NUT OIL FILTER ADAPTOR 2.4L G2
76	084750	4	PLUG SPARK
77	0G4003	1	SHIELD HEAT IGNITION COIL 2.4L
78	0G8854	1	SPARK PLUG WIRE SET 2.4L G2 IG
79	0H1432B	1	MANIFOLD EXH 60K G2 TURBO (MA)
80 (1)	0A45310244	1(REF)	FILTER 1.5L/2.4L G2 OIL (NOT SHOWN)
81	0H1275A	1	HARN ENG 2.4L R-200C 3600 RPM (NOT SHOWN)