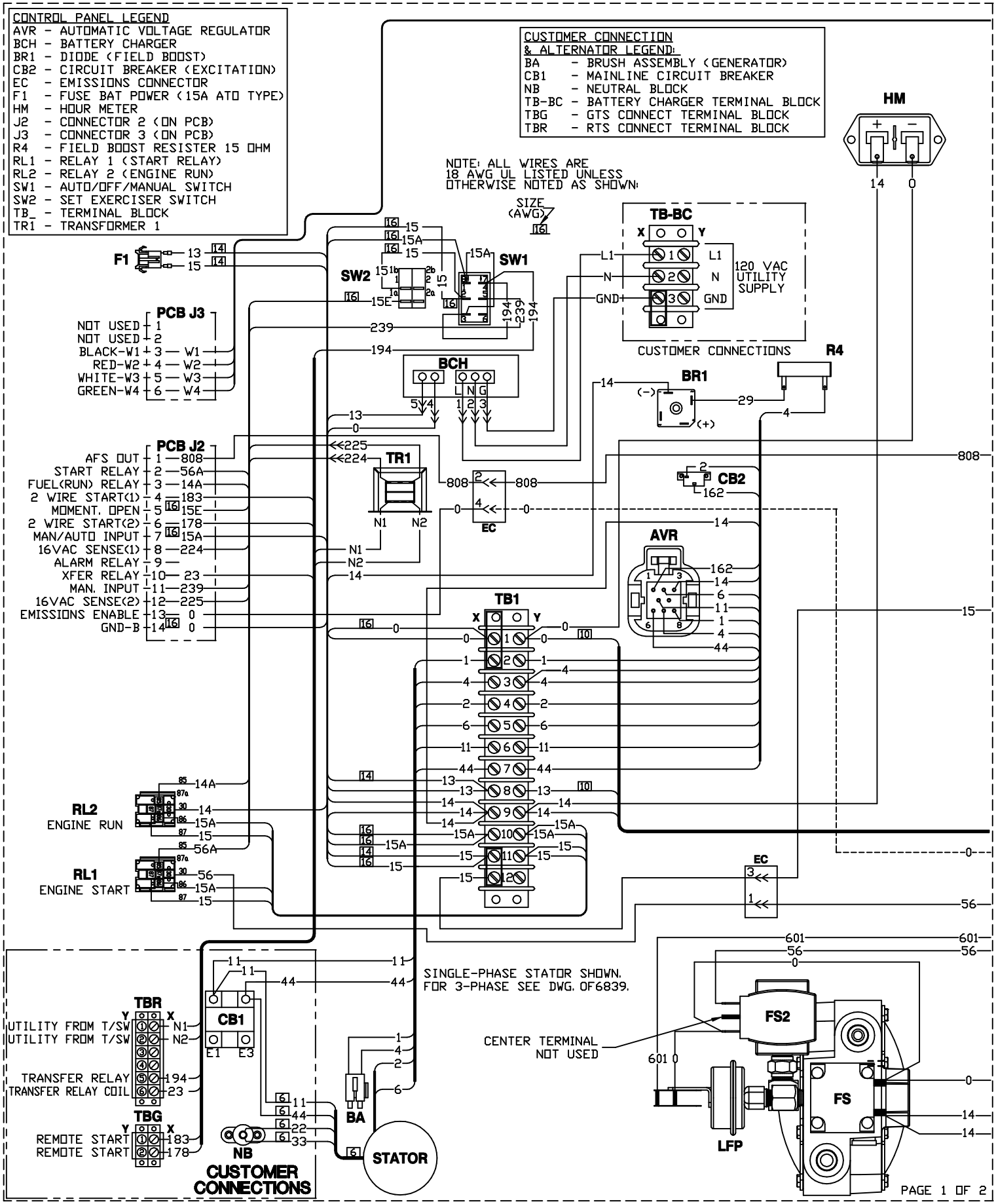

WIRING - DIAGRAM

G1.6L G11 R-200A

DRAWING #: 0H4371

REVISION: -A-

DATE: 6/15/09

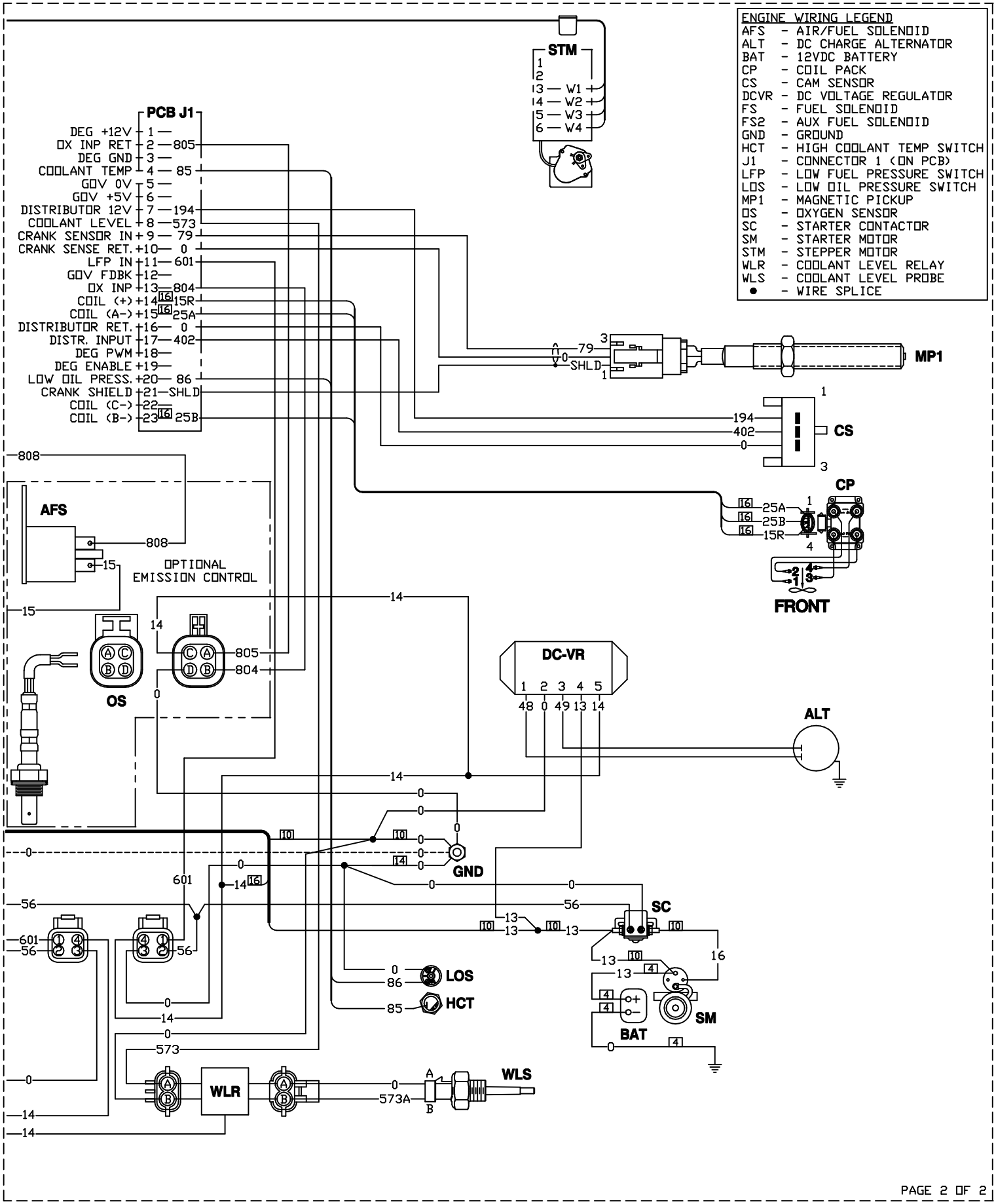
ENGINE WIRING LEGEND
AFS - AIR/FUEL SOLENOID
ALT - DC CHARGE ALTERNATOR
BAT - 12VDC BATTERY
CP - COIL PACK
CS - CAM SENSOR
DCVR - DC VOLTAGE REGULATOR
FS - FUEL SOLENOID
FS2 - AUX FUEL SOLENOID
GND - GROUND
HCT - HIGH COOLANT TEMP SWITCH
J1 - CONNECTOR 1 (ON PCB)
LFP - LOW FUEL PRESSURE SWITCH
LOS - LOW OIL PRESSURE SWITCH
MP1 - MAGNETIC PICKUP
OS - OXYGEN SENSOR
SC - STARTER CONTACTOR
SM - STARTER MOTOR
STM - STEPPER MOTOR
WLR - COOLANT LEVEL RELAY
WLS - COOLANT LEVEL PROBE
● - WIRE SPLICE
STM
W1
W2
W3
W4
PCB J1
DEG +12V
OX INP RET
DEG GND
COOLANT TEMP
GOV 0V
GOV +5V
DISTRIBUTOR 12V
COOLANT LEVEL
CRANK SENSOR IN
CRANK SENSE RET.
LFP IN
GOV FDBK
OX INP
COIL (+)
COIL (A-)
DISTRIBUTOR RET.
DISTR. INPUT
DEG PWM
DEG ENABLE
LOW OIL PRESS.
CRANK SHIELD
COIL (C-)
COIL (B-)
MP1
SHLD
CS
CP
25A
25B
15R
FRONT
AFS
OPTIONAL
EMISSION CONTROL
OS
DC-VR
ALT
GND
SC
LOS
HCT
SM
BAT
WLR
WLS
PAGE 2 OF 2