GROUP D

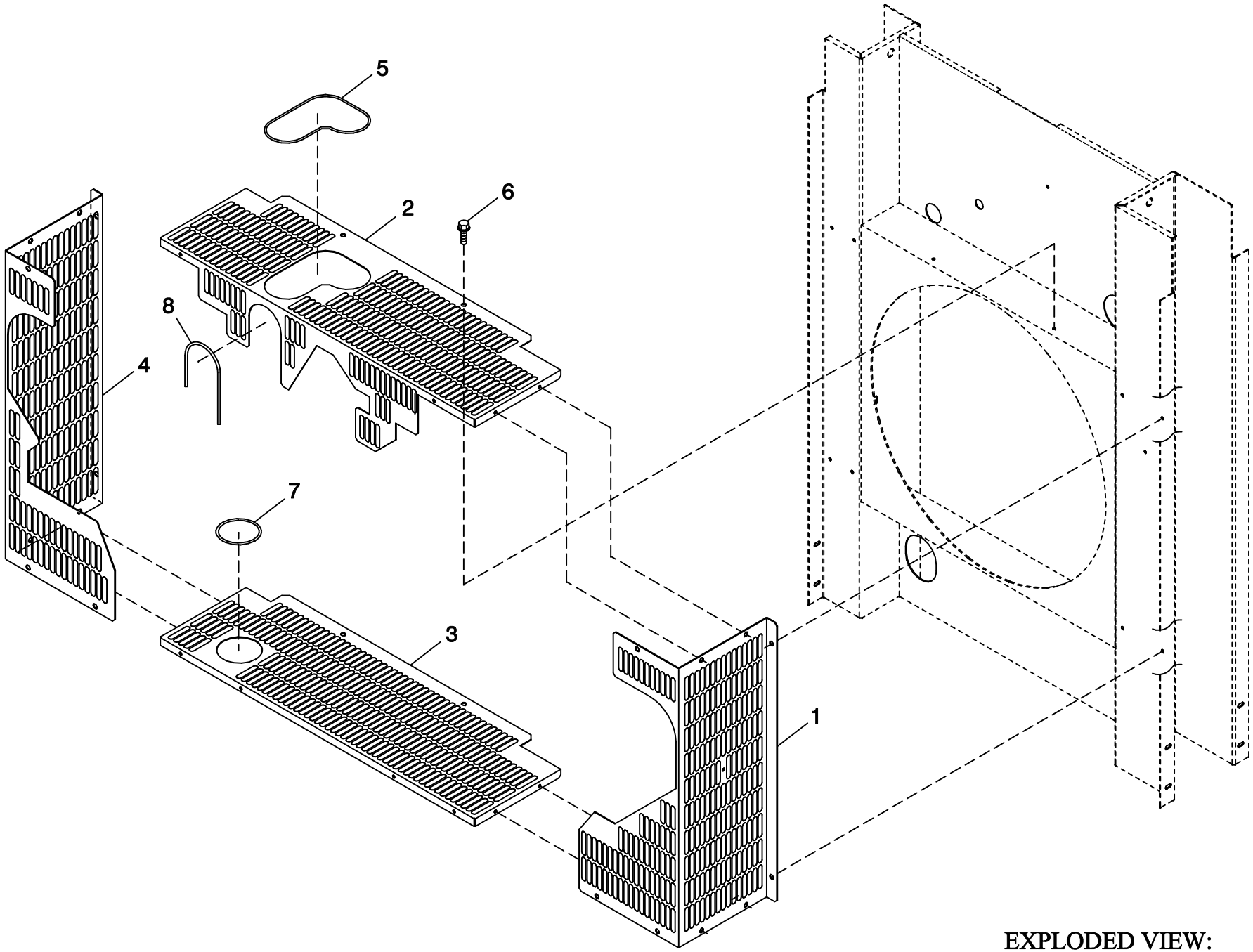

EXPLODED VIEW:
ENGINE GUARDS 5.4L/6.8L C3
DRAWING #: 0G1351

REVISION: H-4365-A
DATE: 4/27/09

EXPLODED VIEW: ENGINE GUARDS 5.4L/6.8L C3
DRAWING #: 0G1351

GROUP D

APPLICABLE TO:

ITEM	PART #	QTY.	DESCRIPTION
1	0G17420GS0R	1	GUARD BELT RIGHT HAND C3
2	0G17390GS0R	1	GUARD BELT TOP C3
3	0G17400GS0R	1	GUARD BELT BOTTOM C3
4	0G17410GS0R	1	GUARD BELT LEFT HAND C3
5	056326	1	TRIM VINYL BLACK 1/8GP (21" LG)
6	0C2454	22	SCREW THF M6-1 X 16 N WA Z/JS
7	056326	1	TRIM VINYL BLACK 1/8GP (10 .37" LG)
8	056326	1	TRIM VINYL BLACK 1/8GP (12" LG)