GROUP D

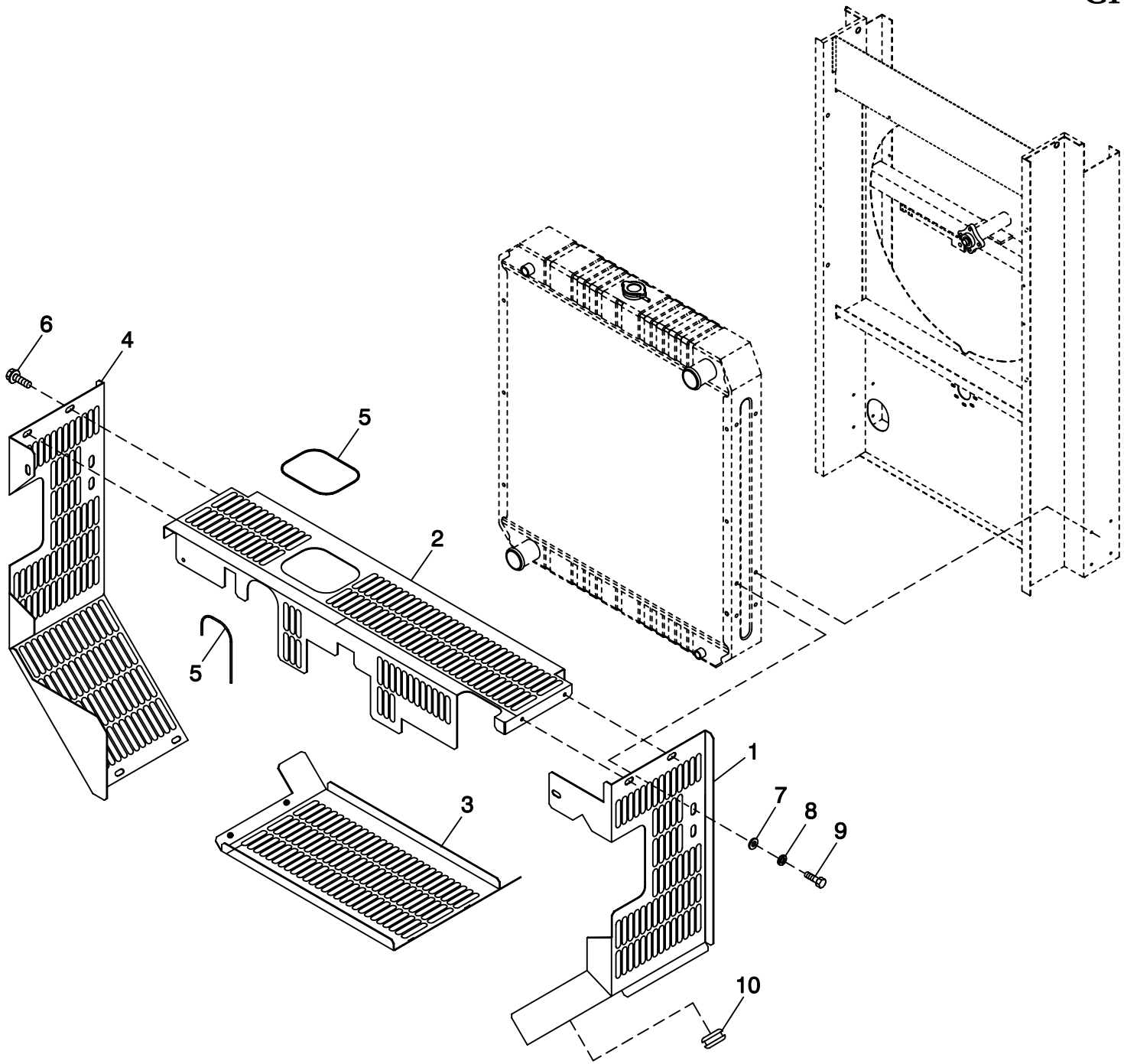

EXPLODED VIEW:
ENGINE GUARDS 5.4L/6.8L C5
DRAWING #: 0G1354

REVISION: G-8632-A
DATE: 8/2/06

EXPLODED VIEW: ENGINE GUARDS 5.4L/6.8L C5
DRAWING #: 0G1354

APPLICABLE TO:

GROUP D

ITEM	PART #	QTY.	DESCRIPTION
1	0G17730GS0R	1	GUARD BELT RIGHT HAND C5
2	0G17710GS0R	1	GUARD BELT TOP C5
3	0G17720GS0R	1	GUARD BELT BOTTOM C5
4	0G17740GS0R	1	GUARD BELT LEFT HAND C5
5	056326	1	TRIM VINYL BLACK 1/8GP
6	0C2454	10	SCREW THF M6-1 X 16 N WA Z/JS
7	022131	4	WASHER FLAT 3/8-M10 ZINC
8	046526	4	WASHER LOCK M10
9	051756	4	SCREW HHC M10-1.5 X 20 G8.8
10	081008B	1	GROMMET 1.25 X .25 X 1.00