0H2587

WIRING — DIAGRAM

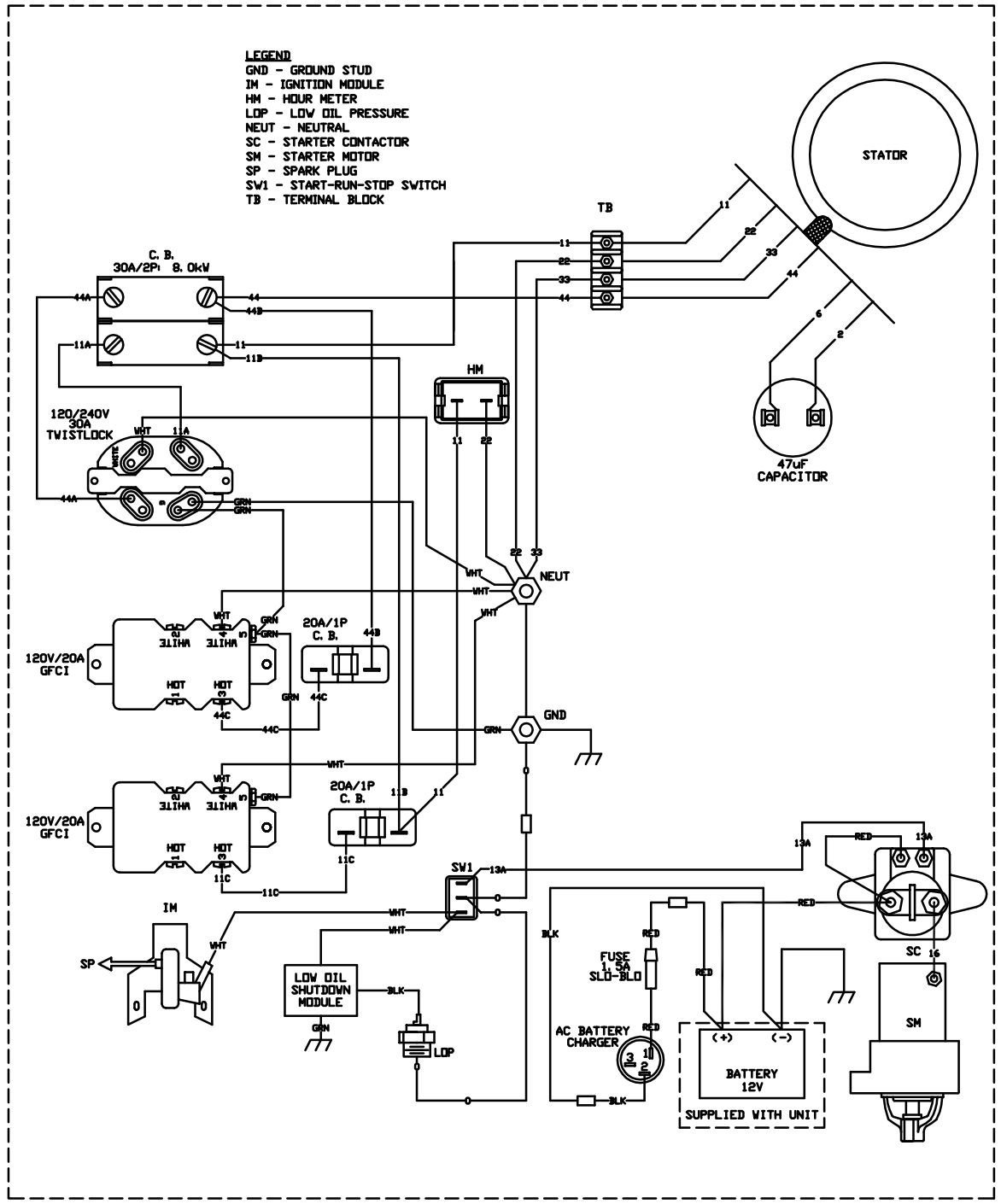

SCHEMATIC — DIAGRAM

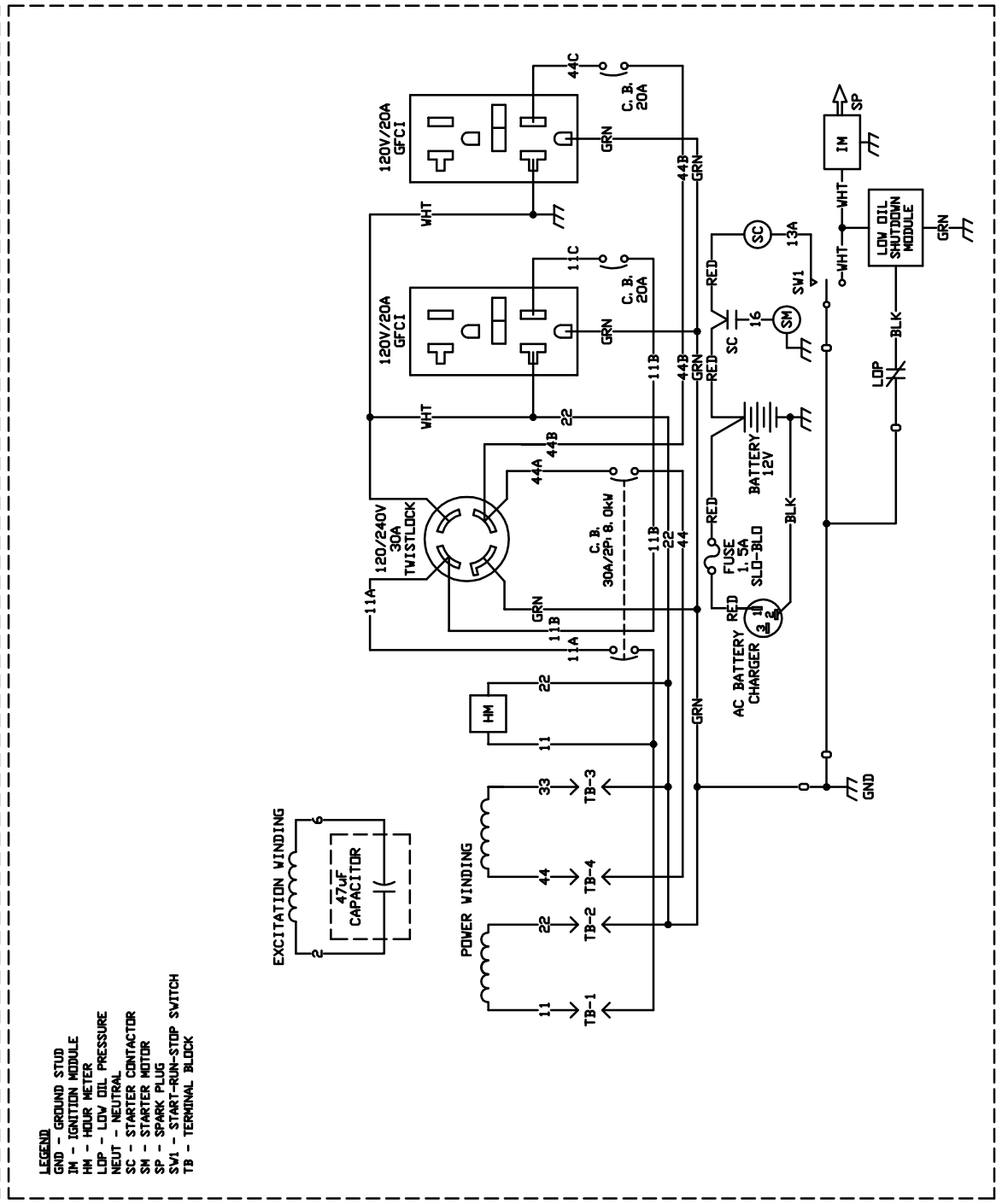

GENERAC POWER SYSTEMS OWNS THE COPYRIGHT OF THIS DRAWING WHICH IS SUPPLIED IN CONFIDENCE AND MUST NOT BE USED FOR ANY PURPOSE OTHER THAN FOR WHICH IT IS SUPPLIED WITHOUT THE EXPRESS WRITTEN CONSENT OF GENERAC POWER SYSTEMS.

© GENERAC POWER SYSTEMS 2001

04/27/09	-A-	RELEASED FOR PRODUCTION			

EST. WT.

FINAL WT.

DO NOT SCALE

ALL DIMENSIONS AND TOLERANCING PER ASME Y14.5M-1994

UNLESS OTHERWISE SPECIFIED :

ALL XX DIM ---- ±0.4 MM
ALL XX.X DIM --- ±0.4 MM
ALL XX.XX DIM -- ±0.15 MM
ALL ANGLES ---- ±1°

DRAWING TITLE: WIRING DIAGRAM/SCHEMATIC 8kW XP

MATERIAL: N/A

DWN	DATE	MFG	DATE
J. wray	02/13/09	N/A	
CHKD	DATE	APPD	DATE
CR	05/07/09	BJB	05/18/09
RELEASED FOR PRODUCTION	BY		DATE
	BJB		05/18/09

GENERAC POWER SYSTEMS
Whitewater
P.O. BOX 8
WAUKESHA, WIS. 53187

FILE NAME: 0H2587-A.DWG — SIZE: B

SCALE: NTS — FIRST USE: 5606-1

DWG NO.: 0H2587 — REV: A