GROUP

59	2, 5, 15, 16, 28, 35, 42, 58, 86
60	4, 5, 6
61	7, 42, 43, 44, 45, 46, 47, 48, 49, 50, 51, 52, 53, 54, 57, 58
62	42, 43, 44, 45, 46, 47, 48, 49, 50, 51, 52, 53, 54, 56, 57, 58
63	23, 24, 25

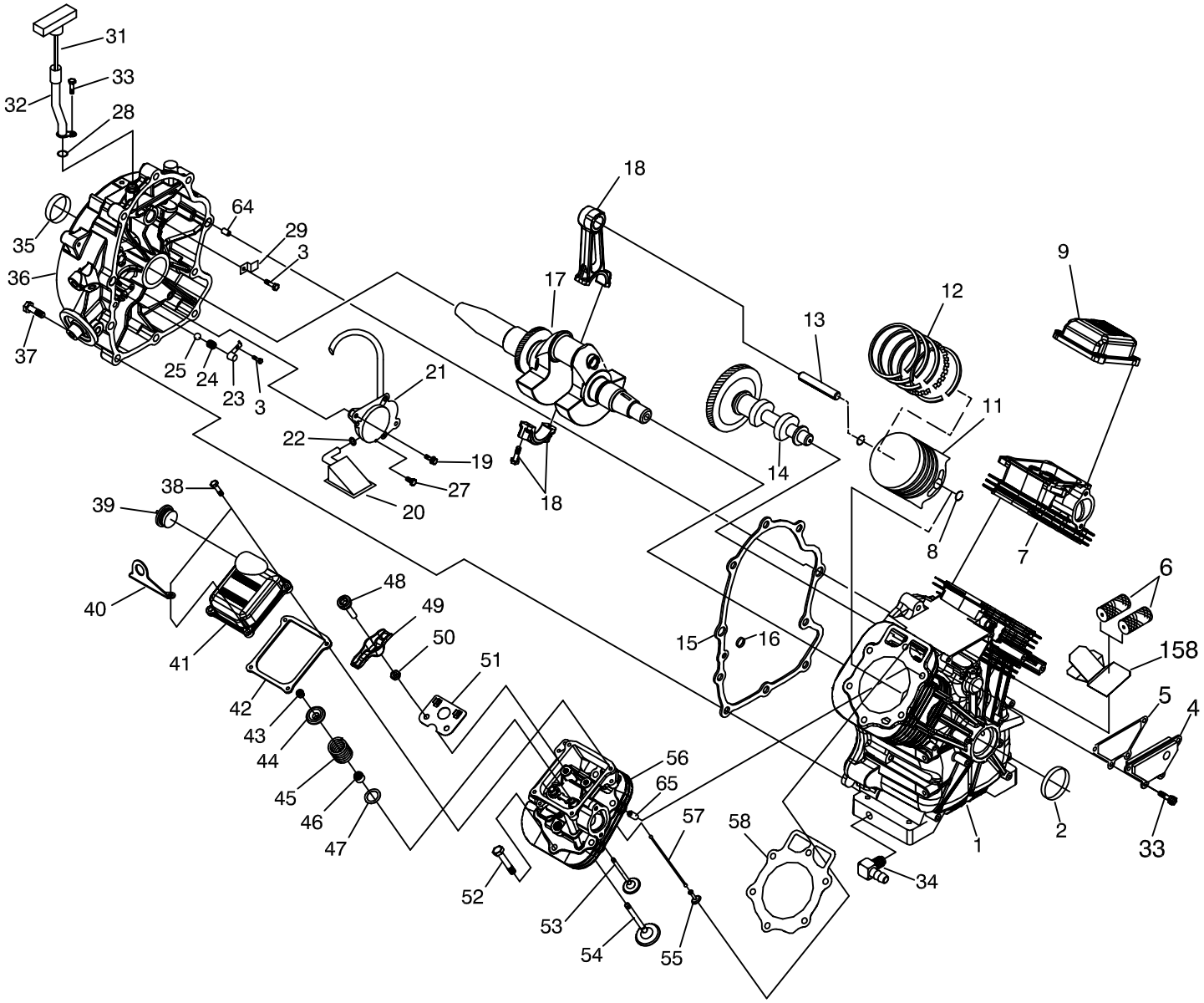

EXPLODED VIEW:
ENGINE GH990/999 HSB 2009
DRAWING #: 0H4654

REVISION: L
DATE: 4/30/14

EXPLODED VIEW: ENGINE GH990/999 HSB 2009
DRAWING #: 0H4654

APPLICABLE TO: 2010 HSB

GROUP

ITEM	PART #	QTY.	DESCRIPTION
1	0G8548	1	ASSY CRANKCASE WITH SLEEVE
2	0K1534	1	SEAL C'SHAFT FLYWHEEL SIDE RED
3	0G0919	5	SCREW HHFCS M6-1.0 X 12 G8.8
4	0G9100	1	ASSEMBLY, BREATHER DUAL VALVE
5	0C3005	1	GASKET, BREATHER COVER
6	0E3372C	2	SEPARATOR, OIL BREATHER
7	0H1760A	1	ASSY HEAD CYL #1
8	071983	4	RETAINER, PISTON PIN 20
9	0C2981C	1	ROCKER, COVER NO OIL FILL
11	0K0988	1	PISTON FLAT TOP 90 HSB 2013
12	0G2565	2	RING SET, PISTON DIA 90
13	0E1466	2	PIN, PISTON (13,14,16,17KW)
	0G7940	2	PIN, PISTON (20KW)
14	0D4041	1	ASSY, CAMSHAFT & GEAR (13,14,16,17KW)
	0G7974	1	ASSY, CAMSHAFT & GEAR (20KW)
15	0C2977	1	GASKET, CRANK CASE
16	0C5943	1	SEAL, OIL PASSAGE
17	0E4357E	1	ASSY, CRANK & GEAR (13,14,16,17KW)
	0G5001E	1	ASSY,C'SHAFT 0.D. 41 (20KW)
18	0J8969	2	ASSY CONROD MACH GT990
	0J8968	2	ASSY CONROD MACH GT999
19	0G6431	2	SCREW SHC SEMS M6-1.0 X 50 G8.8
20	0E6098	1	SCREEN, OIL PICKUP
21	0D4123B	1	ASSEMBLY, OIL PUMP W/O O-RING
22	0E8152	1	O-RING .49 ID X .07 THICK
23	0C3011	2	COVER, OIL RELIEF
24	0C3009	2	SPRING, OIL RELIEF
25	0C3010	2	BALL, 1/2D OIL RELIEF
27	0F5458	1	SCREW, PLASTITE HI-LOW #10
28	0C3027	1	O-RING, 3/8" X 1/2"
29	0C5998	1	CLAMP, OIL TUBE
31	0H6859L	1	ASSEMBLY, DIPSTICK WITH HANDLE ORG
32	0J9272	1	TUBE, DIPSTICK
33	0D6147	5	SCREW HHFC M6-1.0 X 10mm
34	043790A	1	BARBED ELBOW 90 3/8NPT X 3/8 VS
35	0K2035	1	SEAL CRANKSHAFT PTO SIDE RED
36	0F8054	1	GEARCOVER / ADAPTOR GTH-990
37	0C3006	10	SCREW, HHFC M10-1.5 X 55
38	080318	8	SCREW HHFC M6-1.0 X 25
39	093064A	1	ASSEMBLY, OIL FILL CAP ORG
40	0K4867	2	LIFT HOOK GT990/760
41	0D2723B	1	ROCKER, COVER WITH OIL FILL
42	0C2979	2	GASKET, VALVE COVER
43	086515	8	KEEPER, VALVE SPRING
44	0D2274	4	RETAINER, VALVE SPRING
45	0D3867	4	SPRING, VALVE
46	078672	2	SEAL, VALVE STEM D7
47	0C5371	4	WASHER, VALVE SPRING
48	072694	4	STUD, ROCKER ARM PIVOT
49	0D5313	4	ROCKER ARM
50	0D3998	4	NUT HEX M8-1.0 G8 YEL CHR

ITEM	PART #	QTY.	DESCRIPTION
51	0J9679	2	PUSH ROD GUIDE PLATE
52	0C2976	12	SCREW HHFC M8-1.25 X 65
53	086516	2	VALVE, EXHAUST
54	0C2229	2	VALVE, INTAKE
55	083897	4	TAPPET, SOLID
56	0H1760B	1	ASSY HEAD CYL #2
57	0D9853D	4	PUSHROD, 147
58	0C2978	2	GASKET, HEAD
59	0D4010	1	KIT GASKET
60	0D4012	1	KIT BREATHER ASSEMBLY
61	0D8675A	1	KIT HEAD ASSEMBLY CYLINDER 1
62	0D8675B	1	KIT HEAD ASSEMBLY CYLINDER 2
63	0D4015	1	KIT OIL RELIEF
64	078699C	2	SLEEVE DOWEL PIN 14 DIA.
65	078699B	4	SLEEVE DOWEL PIN 12 DIA.
158	0G8558	1	DIVERTER, BREATHER GTH

REVISION: L
DATE: 4/30/14

GROUP

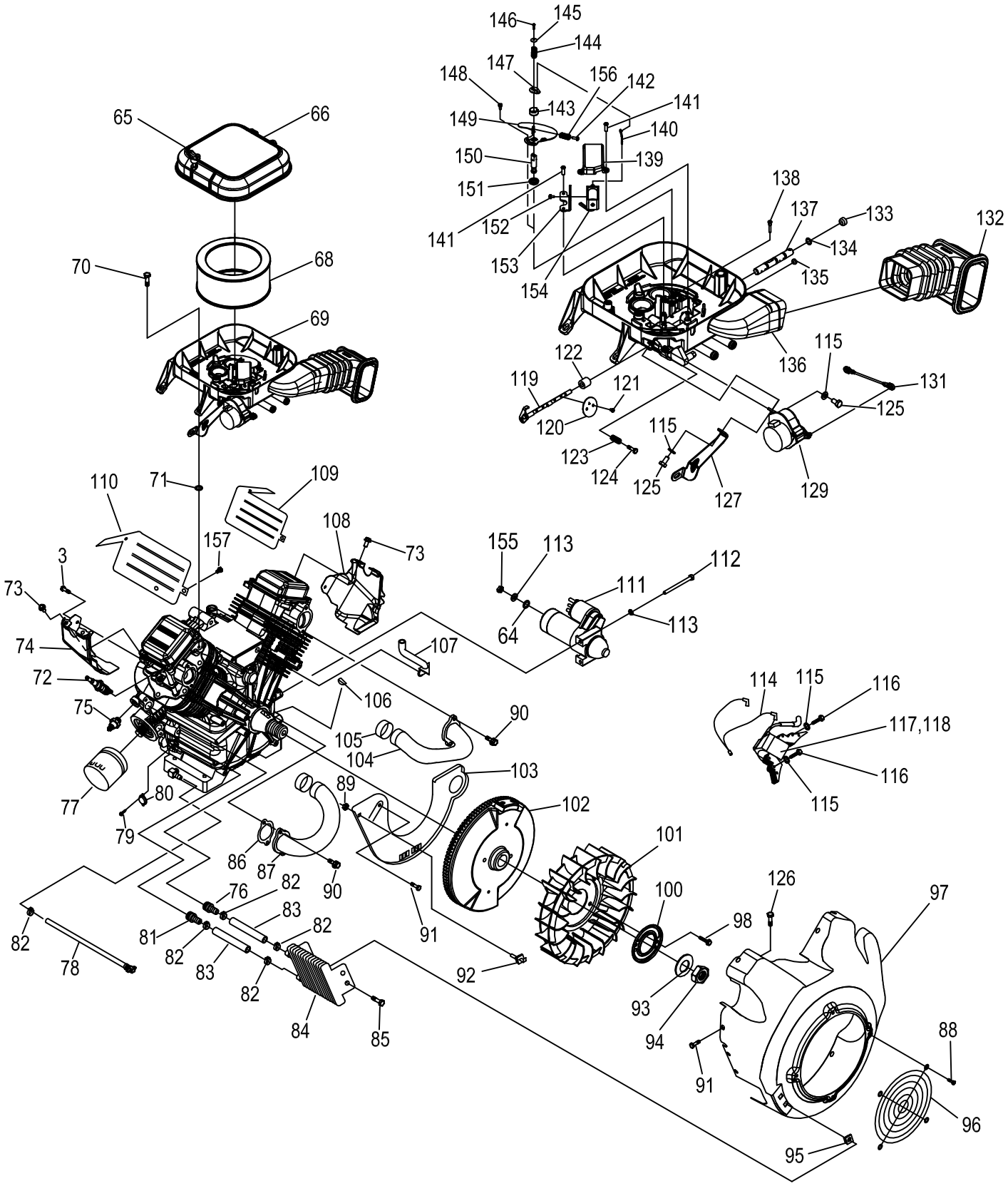

EXPLODED VIEW:
ENGINE GH990/999 HSB 2010
DRAWING #: 0H4654

REVISION: L
DATE: 4/30/14

EXPLODED VIEW: ENGINE GH990/999 HSB 2010
DRAWING #: 0H4654

APPLICABLE TO: 2010 HSB

GROUP

ITEM	PART #	QTY.	DESCRIPTION
64	022145	1	WASHER FLAT M8 – 5/16
65	0H5561A	2	KNOB, AIR CLEANER ORG (13,14,16,17Kw)
	0H5561D	2	KNOB,AIR CLEANER ORG (20Kw)
66	0C3024	1	COVER, AIRBOX NG/LP (13,14,16,17Kw)
	0G5895	1	COVER, AIRBOX NG/LP (20Kw)
68	0C8127	1	ELEMENT, AIR CLEANER (13,14,16,17Kw)
	0G5894	1	ELEMENT, AIR CLEANER (20Kw)
69	0F9255	1	ASSY, MIXER / AIRBOX 990 (13, 16Kw)
	0G8297	1	ASSY, MIXER / AIRBOX 990 (14, 17 Kw)
	0G8448	1	ASSY, MIXER / AIRBOX 999 (20Kw)
70	0E9582	4	SCREW SHLDR(8MM) M6-1.0 X 21
71	0D4417	4	WASHER,RUBBER 1/4" X 1/8" THICK
72	0E7585A	2	SPARKPLUG, RCY14 .040"GAP (13,14,16,17Kw)
	0G0767A	2	SPARKPLUG, RC12 .040" GAP (20Kw)
73	0E6043	2	SCREW TAPTITE M5 – 0.8 X 8
74	0G7606	1	WRAPPER, LOWER CYLINDER 2 ZINC
75	0G6820	1	SWITCH, OIL PRESS
76	0H6244	1	EXTENDED BARBED STR ¼ NPT X 3/8
77	070185E	1	OIL FILTER, 90mm
78	0H8131	1	ASSY, OIL DRAIN HOSE ORG
79	0A7095	2	SCREW #4-40 X 5/16 SEMS
80	094090	1	SWITCH, THERMAL 293F
81	035461	1	BARBED STRAIGHT 1/4NPT X 3/8
82	0G3662B	5	CLAMP, HOSE OETIKER STEPLESS 18.5mm
83	0F0452C	2	HOSE 3/8" 300PSI 6" LG OIL
84	0E9506	1	COOLER, OIL
85	0C9764	4	SCREW PLASTITE 1/4-15 X 3/4
86	0C3043	2	GASKET, MANIFOLD / PORT
87	0C7694A	1	MANIFOLD CYLINDER 2
88	045756	4	SCREW, HHTT M6-1 x 10 LONG
89	082025	1	NUT, HEX LOCK M5-0.8 ZINC
90	0G3730	4	SCREW SHC M8 – 1.25 X 20 SEMS
91	090388	13	SCREW TAPTITE M6–1X12 CLEAR ZINC
92	0E4997	1	ASSY,GROUND WIRE CONNECTOR
93	0C3033	1	WASHER, 25MM I.D.
94	0C3034	1	NUT, HEX M24
95	0C9763	4	NUT, GROMMET 1/4 PLUG
96	0D1131	1	GUARD, FAN
97	0F1169K	1	HOUSING, BLOWER NG COOLER
98	0H4957	2	SCREW HHFCS M8 – 1.25 X 10 G8.8
99			
100	0C3032	1	PLATE, FAN
101	0C3031	1	FAN, NYLON
102	0C3725B	1	ASSY, FLYWHEEL (13,14,16,17Kw)
	0C3725D	1	ASSY, FLYWHEEL (20Kw)
103	0G4928C	1	PLATE, BACKING WITH CUT OUT
104	0C7693A	1	MANIFOLD CYLINDER 1
105	0C3041A	2	SLEEVE, RUBBER
106	082774	1	KEY, WOODRUFF 4 X 19D
107	0C3036A	1	HOSE BREATHER
108	0G7604	1	WRAPPER, LOWER CYLINDER 1 ZINC
109	0G7603	1	WRAPPER, UPPER CYLINDER 1 ZINC
110	0G7605	1	WRAPPER, UPPER CYLINDER 2 ZINC
111	0E9323	1	STARTER MOTOR HEAR REDUCED 1KW
112	061906	2	SCREW HHC M8 – 1.25 X 85 G8.8
113	022129	3	WASHER LOCK M8 – 5/16
114	0F1177	1	ASSEMBLY, GROUND WIRE
115	022097	2	WASHER LOCK M6 – 1/4
116	0G3110	4	SCREW TAPTITE M6 – 1.0 X 20 ZINC
117	0G3224A	1	ASSY, IGN COIL W/DIODE, CYLINDER 1
118	0G3224B	1	ASSY, IGN COIL W/DIODE, CYLINDER 2
119	0E9568	1	ASSY, THROTTLE SHAFT
120	0E9565	2	THROTTLE VALVE
121	074027	4	SCREW PPHM M3 – 0.5 X 5
122	0C3044	1	COVER, DUST, MIX/AIRBOX
123	0C4756	1	SPRING, IDLE ADJUST
124	075477	1	SCREW PPHM M5 – 0.58 X 20
125	043116	2	SCREW HHC M6 – 1.0 X 12
126	0E1644	1	SCREW BHSC M6-1.0 X 12 SS
127	0E9572	1	BRACKET, STEPPER MOTOR
129	0G6453	1	ASSY,CONTROLLER GTH990 HSB
131	0E9570	1	ASSY, THROTTLE ROD
132	0E9577	1	BELLOWS, INTAKE
133	0E5846	1	EXPANSION PLUG
134	0E9419	3	#10 O-RING
135	0C4760	1	PLUG, MANIFOLD
136	0F9253	1	ASSY, AIR BOX BASE
137	0G5970	1	PIN, FUEL SELECTOR (13, 16kW) NO STRIPES
	0G8824	1	PIN,FUEL SELECTOR (14,17kW) 1 STRIPES
	0G9133	1	PIN, FUEL SELECTOR (20kW) 3 STRIPES
138	0E9554	1	PIN, FUEL SEL STOP
139	0E9348	1	SOLENOID COVER
140	0E9599	1	LINKAGE, CHOKE
141	0E9595	4	SCREW PPPH HI-LO #6 X 1/2
142	090987	1	SCREW PHTT M3 – 0.5 X 8
143	0E9403	1	RETAINER, CHOKE RETURN SPRING
144	0E9571	1	SPRING, CHOKE RETURN
145	0E9380	1	WASHER, BELLEVILLE SPRING
146	0A6345	1	SCREW PPHM M2 – 0.4 X 8
147	0E9598	1	CHOKE ARM
148	0E9593	1	SCREW SHOULDER M3 – 0.5 X 6
149	0E9564	1	VALVE, CHOKE
150	0J0097	1	SHAFT, CHOKE
151	0E9357	1	SEAL, GOVERNOR ARM
152	0A7094	2	SCREW PHM #4 – 40 X 1/4
153	0E9574	1	BRACKET, SOLENOID
154	0F9273	1	SOLENOID, 6VDC
155	0F5467	1	NUT HEX M8 – 1.25 YELLOW ZINC
156	0E9557	1	SPRING, CHOKE VALVE ADJUST
157	0E1644	1	SCREW, BHSC M6-1.0 x 12

REVISION: L
DATE: 4/30/14