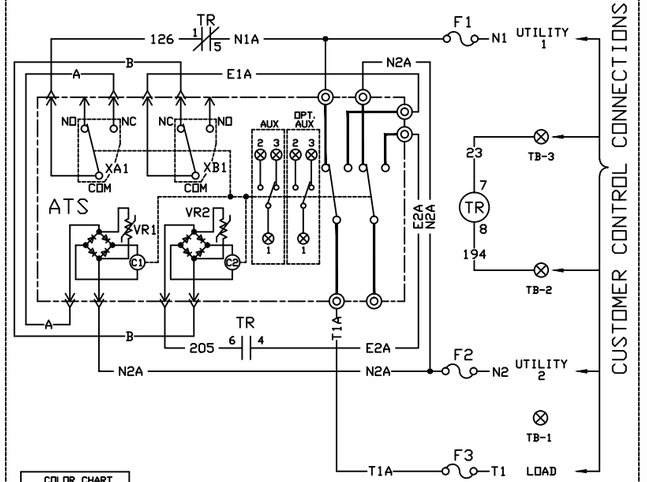
0K9491

## SCHEMATIC – DIAGRAM

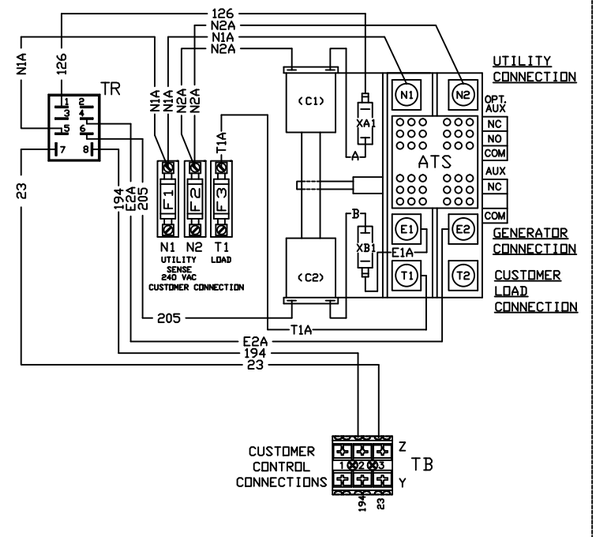
NOTE:
ALL CONTACTS SHOWN WITH TRANSFER SWITCH IN UTILITY POSITION.




| COLOR CHART | |
|---|---|
| WIRE | WIRE COLOR |
| 23 | WHITE |
| 126 | ORANGE |
| 194 | RED |
| 205 | VIOLET |
| A | BLACK |
| B | GRAY |
| E1A | BROWN |
| E2A | BROWN/WHITE |
| N1A | YELLOW |
| N2A | YELLOW/BLACK |
| T1A | BLUE |

| LEGEND | |
|---|---|
| ATS | TRANSFER SWITCH CONTACTOR |
| C1 | SOLENOID COIL (UTILITY CLOSING) |
| C2 | SOLENOID COIL (STANDBY CLOSING) |
| F1,F2,F3 | FUSE, 5A |
| TB | TERMINAL STRIP (CUSTOMER CONNECTION) |
| TR | RELAY, TRANSFER |
| VR1, VR2 | VARISTOR |
| XA1, XB1 | LIMIT SWITCHES, ACTUATOR |

## WIRING – DIAGRAM



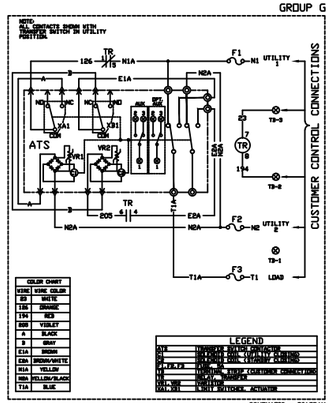

| REV | DESCRIPTION |
|---|---|
| -A- | RELEASED FOR PRODUCTION |
| ECN# K-1840-B | REVISED AUX. CONTACTS |

ENGINE TITLE: SD/WD 100-200A XFER SW RTS 2014 NON-SE
MATERIAL: N/A
DRAWN: GDV 05/29/14
CHECKED:
APVD:
DWG SIZE: D
SCALE: 1 = 1
PART: RTS 2014
DWG NO: 0K9491
REV: B
DO NOT SCALE DRAWING

GENERAC POWER SYSTEMS
S45 W29290 HWY. 59
WAUKESHA, WI. 53187

1 2 3 4 5 6 7 8

GROUP G



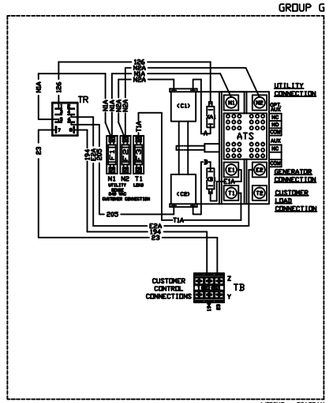

| COLOR CHART | |
|---|---|
| WIRE | WIRE COLOR |
| 23 | WHITE |
| 126 | ORANGE |
| 194 | RED |
| 205 | VIOLET |
| A | BLACK |
| B | GRAY |
| E1A | BROWN |
| E2A | BROWN/WHITE |
| N1A | YELLOW |
| N2A | YELLOW/BLACK |
| T1A | BLUE |

| LEGEND | |
|---|---|
| ATS | TRANSFER SWITCH CONTACTOR |
| C1 | SOLENOID COIL (UTILITY CLOSING) |
| C2 | SOLENOID COIL (STANDBY CLOSING) |
| F1,F2,F3 | FUSE, 5A |
| TB | TERMINAL STRIP (CUSTOMER CONNECTION) |
| TR | RELAY, TRANSFER |
| VR1, VR2 | VARISTOR |
| XA1, XB1 | LIMIT SWITCHES, ACTUATOR |

REVISION K-1840-B
DATE: 05/29/14

SCHEMATIC – DIAGRAM
RTS 2014 NON-SE
DRAWING # 0K9491

GROUP G




REVISION K-1840-B
DATE: 05/29/14

WIRING – DIAGRAM
RTS 2014 NON-SE
DRAWING # 0K9491