INSTALLATION GUIDELINES

Air-cooled Generators

⚠ DANGER!

⚠ NOT INTENDED FOR USE IN CRITICAL LIFE SUPPORT APPLICATIONS.

⚠ THIS PRODUCT CAN BE INSTALLED BY THE HOMEOWNER. HOWEVER, IF YOU ARE UNCOMFORTABLE WITH THE SKILLS OR TOOLS REQUIRED, HAVE A QUALIFIED ELECTRICIAN OR CONTRACTOR PERFORM THE INSTALLATION.

⚠ DEADLY EXHAUST FUMES! OUTDOOR INSTALLATION ONLY!

THIS MANUAL MUST BE USED IN CONJUNCTION WITH THE APPROPRIATE OWNER'S MANUAL.

This manual should remain with the unit.

WARNING!

California Proposition 65

Engine exhaust and some of its constituents are known to the state of California to cause cancer, birth defects, and other reproductive harm.

WARNING!

California Proposition 65

This product contains or emits chemicals known to the state of California to cause cancer, birth defects, and other reproductive harm.

Table of Contents

Section 1 — Safety Rules & General Information 2
- 1.1 Introduction 2
- 1.2 Safety Rules 3
- 1.3 General Rules 4

Section 2 — Unpacking/Inspection/Familiarization 6
- 2.1 Required Tools 6
- 2.2 Unpacking 7
- 2.3 Parts Shipped Loose 9

Section 3 — Site Selection and Preparation 10
- 3.1 Site Selection 10
- 3.2 Site Preparation 12

Section 4 — Generator Placement 13
- 4.1 Generator Placement 13

Section 5 — Fuel Conversion/Gas Requirements/Connections 15
- 5.1 Fuel Conversion 15
- 5.2 Fuel Requirements and Recommendations 16
- 5.3 Fuel Consumption 17
- 5.4 Fuel Line Sizing 17
- 5.5 Installing and Connecting Gas Lines 18

Section 6 — Electrical Connections 21
- 6.1 Generator Connections 21
- 6.2 Control Wiring 21
- 6.3 Main AC Wiring 22
- 6.4 Battery Requirements 23
- 6.5 Battery Installation 23

Section 7 — Control Panel/Activation/Start-up/Testing 24
- 7.1 Control Panel Interface 24
- 7.2 Generator Activation 25
- 7.3 Before Initial Start-up 25
- 7.4 Check Manual Transfer Switch Operation 27
- 7.5 Electrical Checks 27
- 7.6 Generator Tests Under Load 28
- 7.7 Checking Automatic Operation 28
- 7.8 Installation Summary 29

Section 8 — Troubleshooting 30

Section 9 — Quick Reference Guide 31

Section 10 — Accessories 32

Section 11— Notes 33

Section 12 — Interconnection Diagram 34

Section 13 — Installation Diagram 36

Section 1 Safety Rules & General Information

1.1 INTRODUCTION

Thank you for purchasing this compact, high performance, air-cooled, engine-driven generator. It is designed to automatically supply electrical power to operate critical loads during a utility power failure.

This unit is factory installed in an all-weather, metal enclosure that is intended exclusively for outdoor installation. This generator will operate using either vapor withdrawn liquid propane (LP) or natural gas (NG).

NOTE:

When sized properly, this generator is suitable for supplying typical residential loads such as Induction Motors (sump pumps, refrigerators, air conditioners, furnaces, etc.), Electronic Components (computer, monitor, TV, etc.), Lighting Loads and Microwaves.

1.1.1 READ THIS MANUAL THOROUGHLY

If any portion of this manual is not understood, contact the nearest Dealer for starting, operating and servicing procedures.

Throughout this publication and on tags and decals affixed to the generator, DANGER, WARNING, CAUTION and NOTE blocks are used to alert personnel to special instructions about a particular operation that may be hazardous if performed incorrectly or carelessly. Observe them carefully. Their definitions are as follows:

⚠ DANGER!

INDICATES A HAZARDOUS SITUATION OR ACTION WHICH, IF NOT AVOIDED, WILL RESULT IN DEATH OR SERIOUS INJURY.

⚠ WARNING!

Indicates a hazardous situation or action which, if not avoided, could result in death or serious injury.

⚠ CAUTION!

Indicates a hazardous situation or action which, if not avoided, could result in minor or moderate injury.

NOTE: Notes contain additional information important to a procedure and will be found within the regular text body of this manual.

These safety warnings cannot eliminate the hazards that they indicate. Common sense and strict compliance with the special instructions while performing the action or service are essential to preventing accidents.

Four commonly used safety symbols accompany the **DANGER**, **WARNING** and **CAUTION** blocks. The type of information each indicates is as follows:

This symbol points out important safety information that, if not followed, could endanger personal safety and/or property of others.

This symbol points out potential explosion hazard.

This symbol points out potential fire hazard.

This symbol points out potential electrical shock hazard.

The operator is responsible for proper and safe use of the equipment. The manufacturer strongly recommends that if the operator is also the owner, to read their Owner's Manual and thoroughly understand all instructions before using this equipment. The manufacturer also strongly recommends instructing other users to properly start and operate the unit. This prepares them if they need to operate the equipment in an emergency.

1.1.2 HOW TO OBTAIN SERVICE

When the generator requires servicing or repairs, contact a Dealer for assistance. Service technicians are factory-trained and are capable of handling all service needs. For assistance locating a dealer, call 1-888-436-3722.

When contacting a Dealer about parts and service, always supply the complete model number and serial number of the unit as given on its data decal, which is located on the generator. See section "The Generator" for decal location.

Model No. _____ **Serial No.** _____

1.2 SAFETY RULES

⚠ WARNING!

Save These Instructions – The manufacturer suggests that these rules for safe operation be copied and posted near the unit's installation site. Safety should be stressed to all operators and potential operators of this equipment.

Study these SAFETY RULES carefully before installing, operating or servicing this equipment. Become familiar with this *Installation Manual* and with the unit. The generator can operate safely, efficiently and reliably only if it is properly installed, operated and maintained. Many accidents are caused by failing to follow simple and fundamental rules or precautions.

The manufacturer cannot anticipate every possible circumstance that might involve a hazard. The warnings in this manual and on tags and decals affixed to the unit are, therefore, not all-inclusive. If using a procedure, work method or operating technique the manufacturer does not specifically recommend, ensure that it is safe for others. Also, make sure the procedure, work method or operating technique utilized does not render the generator unsafe.

⚠ DANGER!

Despite the safe design of this generator, operating this equipment imprudently, neglecting its maintenance or being careless can cause possible injury or death. Permit only responsible and capable persons to install, operate and maintain this equipment.

Potentially lethal voltages are generated by these machines. Ensure all steps are taken to render the machine safe before attempting to work on the generator.

Parts of the generator are rotating and/or hot during operation. Exercise care near running generators.

Installation must always comply with applicable codes, standards, laws and regulations.

A running generator gives off carbon monoxide, an odorless, colorless poison gas. Breathing in carbon monoxide can cause headaches, fatigue, dizziness, nausea, vomitting, confusion, fainting, siezures or death.

1.2.1 GENERAL HAZARDS

- For safety reasons, the manufacturer recommends that this equipment be installed by a Service Dealer or other competent, qualified electrician or installation technician who is familiar with applicable codes, standards and regulations. The operator also must comply with all such codes, standards and regulations. Only an Authorized Service Dealer is allowed to perform warranty service on this unit.
- The engine exhaust fumes contain carbon monoxide, which can be DEADLY. This dangerous gas, if breathed in sufficient concentrations, can cause unconsciousness or even death. Do NOT alter or add to the exhaust system or do anything that might render the system unsafe or in noncompliance with applicable codes and standards.
- Install a battery-operated carbon monoxide alarm indoors, according to manufacturer's instructions/recommendations.
- Adequate, unobstructed flow of cooling and ventilating air is critical to correct generator operation. Do not alter the installation or permit even partial blockage of ventilation provisions, as this can seriously affect safe operation of the generator. The generator MUST be installed and operated outdoors only.
- Keep hands, feet, clothing, etc., away from drive belts, fans, and other moving or hot parts. Never remove any drive belt or fan guard while the unit is operating.
- When working on this equipment, remain alert at all times. Never work on the equipment when physically or mentally fatigued.
- Inspect the generator regularly, and contact the nearest Dealer for parts needing repair or replacement.
- Before performing any maintenance on the generator, disconnect its battery cables to prevent accidental start up. Disconnect the cable from the battery post indicated by a NEGATIVE, NEG or (–) first, then remove the POSITIVE, POS or (+) cable. When reconnecting the cables, connect the POSITIVE cable first, the NEGATIVE cable last.
- Never use the generator or any of its parts as a step. Stepping on the unit can stress and break parts, and may result in dangerous operating conditions from leaking exhaust gases, fuel leakage, oil leakage, etc.

1.2.2 ELECTRICAL HAZARDS

- All generators covered by this manual produce dangerous electrical voltages and can cause fatal electrical shock. Utility power delivers extremely high and dangerous voltages to the transfer switch, as does the standby generator when it is in operation. Avoid contact with bare wires, terminals, connections, etc., while the unit is running. Ensure all appropriate covers, guards and barriers are in place, secured and/or locked before operating the generator. If work must be done around an operating unit, stand on an insulated, dry surface to reduce shock hazard.
- Do not handle any kind of electrical device while standing in water, while barefoot, or while hands or feet are wet. DANGEROUS ELECTRICAL SHOCK MAY RESULT.
- The National Electrical Code (NEC) requires the frame and external electrically conductive parts of the generator to be connected to an approved earth ground. Local electrical codes also may require proper grounding of the generator electrical system.
- After installing this home standby electrical system, the generator may crank and start at any time without warning. When this occurs, load circuits are transferred to the STANDBY (generator) power source. To prevent possible injury if such a start and transfer occur, always set the generator to the OFF mode, remove the 7.5 Amp fuse from the generator control panel, and disconnect the battery before working on equipment.
- In case of accident caused by electric shock, immediately shut down the source of electrical power. If this is not possible, attempt to free the victim from the live conductor. AVOID DIRECT CONTACT WITH THE VICTIM. Use a nonconducting implement, such as a dry rope or board, to free the victim from the live conductor. If the victim is unconscious, apply first aid and get immediate medical help.
- Never wear jewelry when working on this equipment. Jewelry can conduct electricity resulting in electric shock, or may get caught in moving components causing injury.

1.2.3 FIRE HAZARDS

- For fire safety, the generator must be installed and maintained properly. Installation must always comply with applicable codes, standards, laws and regulations. Adhere strictly to local, state and national electrical and building codes. Comply with regulations the Occupational Safety and Health Administration (OSHA) has established. Also, ensure that the generator is installed in accordance with the manufacturer's instructions and recommendations. Following proper installation, do nothing that might alter a safe installation and render the unit in noncompliance with the aforementioned codes, standards, laws and regulations.
- Keep a fire extinguisher near the generator at all times. Extinguishers rated "ABC" by the National Fire Protection Association are appropriate for use on the standby electric system. Keep the extinguisher properly charged and be familiar with its use. Consult the local fire department with any questions pertaining to fire extinguishers.

1.2.4 EXPLOSION HAZARDS

- Do not smoke around the generator. Wipe up any fuel or oil spills immediately. Ensure that no combustible materials are left in the generator compartment, or on or near the generator, as FIRE or EXPLOSION may result. Keep the area surrounding the generator clean and free from debris.
- Gaseous fluids such as natural gas and liquid propane (LP) gas are extremely EXPLOSIVE. Install the fuel supply system according to applicable fuel-gas codes. Before placing the home standby electric system into service, fuel system lines must be properly purged and leak tested according to applicable code. After installation, inspect the fuel system periodically for leaks. No leakage is permitted.

1.3 GENERAL RULES

- Follow all safety precautions in the Owner's Manual, Installation Guidelines manual and other documents included with your equipment.
- Refer to NFPA 70E for safety equipment required when working with a live system.
- Never energize a new system without opening all disconnects and breakers.
- Always consult your local code for additional requirements for the area in which the unit is being installed.

⚠ WARNING!

⚠ Improper installation can result in personal injury and damage to the generator. It may also result in the warranty being suspended or voided. All the instructions listed below must be followed including location clearances and pipe sizes.

1.3.1 BEFORE YOU BEGIN

Contact the local inspector or City Hall to be aware of all federal, state and local codes that could impact the installation. Secure all required permits before starting the job.

Carefully read and follow all of the procedures and safety precautions detailed in the installation guide. If any portion of the installation manual, technical manual or other factory-supplied documents is not completely understood, contact a dealer for assistance.

Fully comply with all relevant NEC, NFPA and OSHA standards as well as all federal, state and local building and electric codes. As with any generator, this unit must be installed in accordance with current NFPA 37 and NFPA 70 standards as well as any other federal, state, and local codes for minimum distances from other structures.

Verify the capacity of the natural gas meter or the LP tank in regards to providing sufficient fuel for both the generator and other household and operating appliances.

1.3.2 NEC REQUIREMENTS

Local code enforcement may require that Arc Fault Circuit Interrupters (AFCIs) be incorporated into the transfer switch distribution panel. The Transfer Switch provided with this generator has a distribution panel that will accept AFCIs (pre-wired transfer switches only).

Siemens Part No. Q115AF - 15A or Q120AF - 20A can be obtained from a local electrical wholesaler and will simply replace any of the single pole circuit breakers supplied in the pre-wired transfer switch distribution panel.

1.3.3 STANDARDS INDEX

Applicable national, state or local laws, codes and regulations pertaining to the installation of engine-generator power systems must be strictly complied with. Always use the current acceptable version or edition of the applicable code or standard which applies to your jurisdiction. In the absence of pertinent local laws and standards, the following published booklets may be used as a guide (these apply to localities which recognize NFPA and IBC):

1. National Fire Protection Association (NFPA) 70: The NATIONAL ELECTRIC CODE (NEC) *
2. NFPA 10: Standard for Portable Fire Extinguishers *
3. NFPA 30: Flammable And Combustible Liquids Code *
4. NFPA 37: Standard for Stationary Combustion Engines And Gas Turbines *
5. NFPA 54: National Fuel Gas Code *
6. NFPA 58: Standard for Storage And Handling Of Liquefied Petroleum Gases *
7. NFPA 68: Standard On Explosion Protection By Deflagration Venting *
8. NFPA 70E: Standard For Electrical Safety In The Workplace *
9. NFPA 99: Health Care Facilities Code *
10. NFPA 101: Life Safety Code *
11. NFPA 110: Standard for Emergency and Standby Power Systems *
12. NFPA 211: Standard for Chimneys, Fireplaces, Vents, and Solid Fuel Burning Appliances *
13. NFPA 220: Standard on Types of Building Construction *
14. NFPA 5000: Building Code *
15. International Building Code **
16. Agricultural Wiring Handbook ***
17. ASAE EP-364.2 Installation and Maintenance of Farm Standby Electric Power ****

This list is not all-inclusive. Check with the Authority Having Local Jurisdiction (AHJ) for any local codes or standards which may be applicable to your jurisdiction. The above listed standards are available from the following internet sources:

* www.nfpa.org
** www.iccsafe.org
*** www.rerc.org Rural Electricity Resource Council P.O. Box 309 Wilmington, OH 45177-0309

**** www.asabe.org American Society of Agricultural & Biological Engineers 2950 Niles Road, St. Joseph, MI 9085

⚠ DANGER!

⚠ The installation of this product must comply strictly with applicable codes, standards and regulations. This product can be installed by the homeowner. However, if you are uncomfortable with the skills or tools required, have a qualified electrician or contractor perform the installation.

PERFORM THE INSTALLATION IN ONLY 6 STEPS!

STEP 1 - Unpacking / Inspection / Familiarization

STEP 2 - Site Selection and Preparation

STEP 3 - Generator Placement

STEP 4 - Gas Requirements Connections / Fuel Conversion

STEP 5 - Electrical Connections

STEP 6 - Control Panel Activation / Start-up / Testing

⚠ WARNING!

If this generator is used to power electrical load circuits normally powered by a utility power source, it is required by code to install a transfer switch. The transfer switch must effectively isolate the electrical system from the utility distribution system when the generator is operating (NEC 700, 701 & 702). Failure to isolate an electrical system by such means will result in damage to the generator and also may result in injury or death to utility power workers due to backfeed of electrical energy

Having reviewed SAFETY / GENERAL INFORMATION proceed to Step 1: SECTION 2 - UNPACKING / INSPECTION / FAMILIARIZATION

Section 2 Unpacking / Inspection / Familiarization

NOTE: After unpacking, carefully inspect the contents for damage. It is advised to unpack and inspect the unit immediately upon delivery to detect any damage that may have occured in transit. Any claims for shipping damage need to be filed as soon as possible with the freight carrier. This is especially important if the generator will not be installed for a period of time.

- This standby generator set is ready for installation with a factory supplied and pre-mounted base pad and has a weather protective enclosure that is intended for outdoor installation only.
- This UL listed standby generator set may be packaged with an automatic transfer switch with built-in load center. The combination transfer switch and load center is pre-wired with a two foot and 30 foot conduit. The pre-wired switch is rated for indoor use only. Circuit breakers for emergency circuit connections are included (if equipped).
- This UL listed, 2-pole switch is rated at 50, 100 or 200 Amps, Service Rated at 250 volts maximum. The 200 Amp transfer switch is for indoor/outdoor use (if equipped).

If any loss or damage is noted at time of delivery, have the person(s) making the delivery note all damage on the freight bill or affix their signature under the consignor's memo of loss or damage.

If a loss or damage is noted after delivery, separate the damaged materials and contact the carrier for claim procedures.

"Concealed damage" is understood to mean damage to the contents of a package that is not evident at the time of delivery, but is discovered later.

2.1 REQUIRED TOOLS

- General SAE and Metric hand tools
  - Wrenches
  - Sockets
  - Screwdrivers
- Standard electrician's hand tools
  - Drill and bits for mounting and routing conduits
- 4mm Allen wrench (for access to customer connections)
- 3/16 Allen wrench (test port on fuel regulator)
- Manometer (for fuel pressure checks)
- Meter capable of measuring AC/DC Voltage and Frequency

2.2 UNPACKING

1. With the box removed, you can see that this unit came with an automatic transfer switch. The transfer switch is an option and may not be included.
2. Remove the wood frame and lift the transfer switch, if present, off the top of the generator.

Figure 2.1 — Crated Generator

3. Remove bolts and clamps. **Exercise caution when removing the generator. Dragging it off the pallet WILL damage the base. The generator must be lifted from the wooden pallet to remove.**

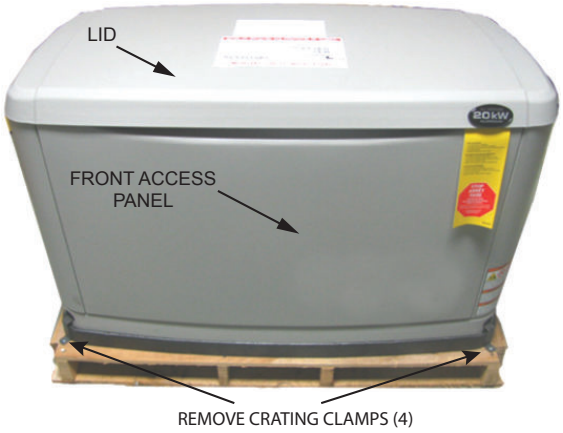

Figure 2.2 — Generator on Pallet

4. The lid will be locked. A set of keys is located behind the breaker door. Open the breaker door and cut the zip tie to remove the keys. Use the keys to open the lid of the generator.

Figure 2.3 — Circuit Breaker Box and Keys (as shipped)

5. There are two locks securing the lid, one on each side. To properly open the lid, press down on the lid above the side lock and unlock the latch. Repeat for the other side. If pressure is not applied from the top, the lid may appear stuck. **NOTE: Always verify that the side locks are unlocked before attempting to lift the lid.**
6. Once the lid is open, remove the front access panel by lifting it up and out. Also remove the black panel over top of the customer connection area.
7. Perform a visual inspection for any hidden freight damage.

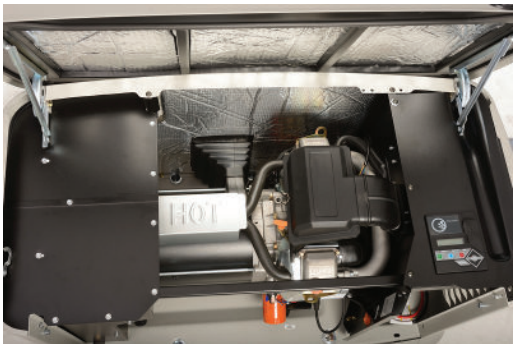

Figure 2.4 — Inspecting for damage

8. Figure 2.5 illustrates the following:
   - Customer connection area (underneath and behind the control panel)
   - Fuel regulator
   - Battery compartment
   - Location of “Loose Shipped Parts”

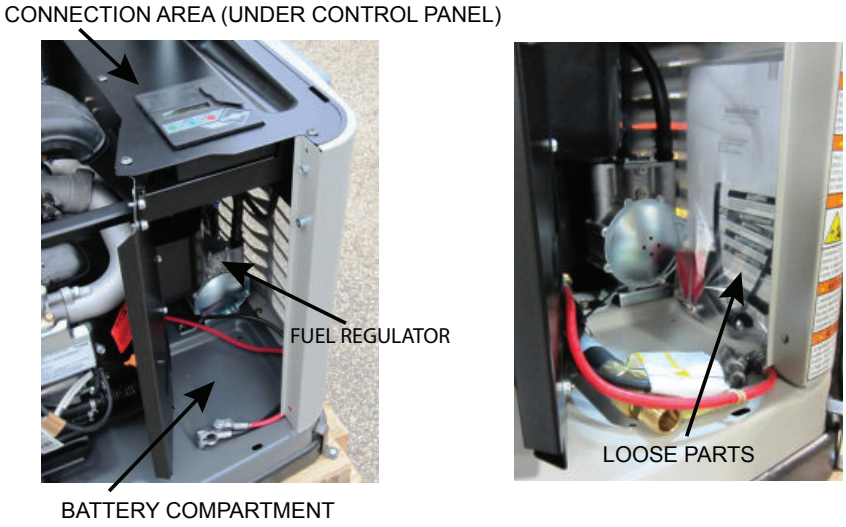

Figure 2.5 — Customer Connection Area/Loose Parts Location

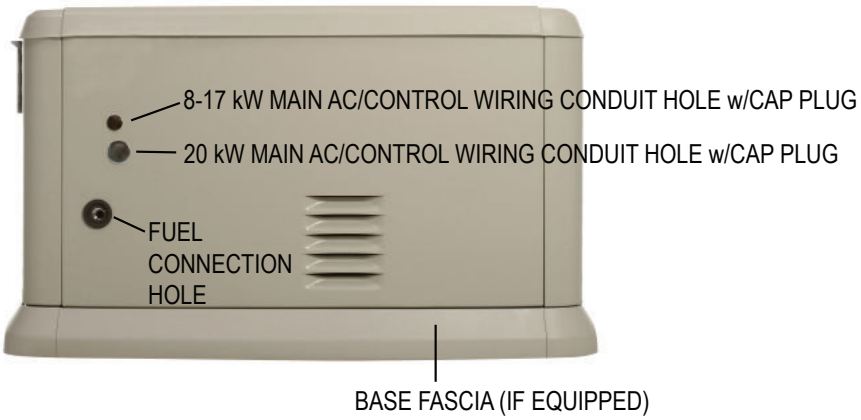

Figure 2.6 — Generator Back View

2.3 PARTS SHIPPED LOOSE

- Rubber Mounts (only for units that include fascia)
- Battery Terminal Cap
- Main Line Circuit Breaker (MLCB) Terminal Caps
- Main Line Circuit Breaker (MLCB) Locking Mechanism
- Keys
- Flex Fuel Line
- Wire Shielding to separate AC from DC control wires
- Wire Nuts (for pre-wired switches only)
- Install / Owner's Manual (not shown) (CD if applicable)

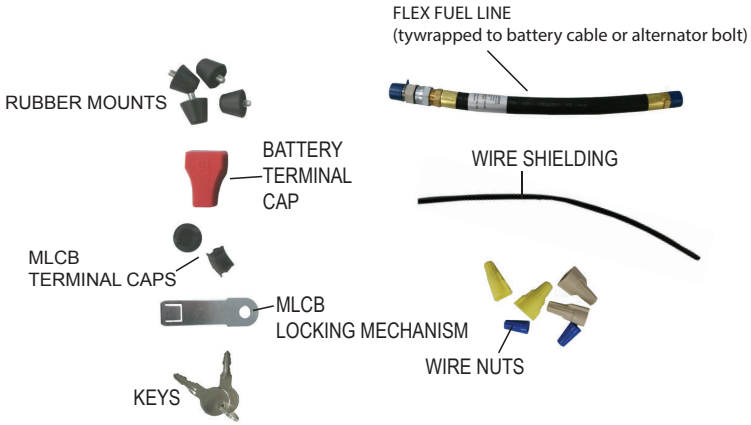

Figure 2.7 — Loose Parts

With the UNPACKING / INSPECTION / FAMILIARIZATION completed, proceed to Step 2: SECTION 3 - SITE SELECTION and PREPARATION

Section 3 Site Selection and Preparation

3.1 SITE SELECTION

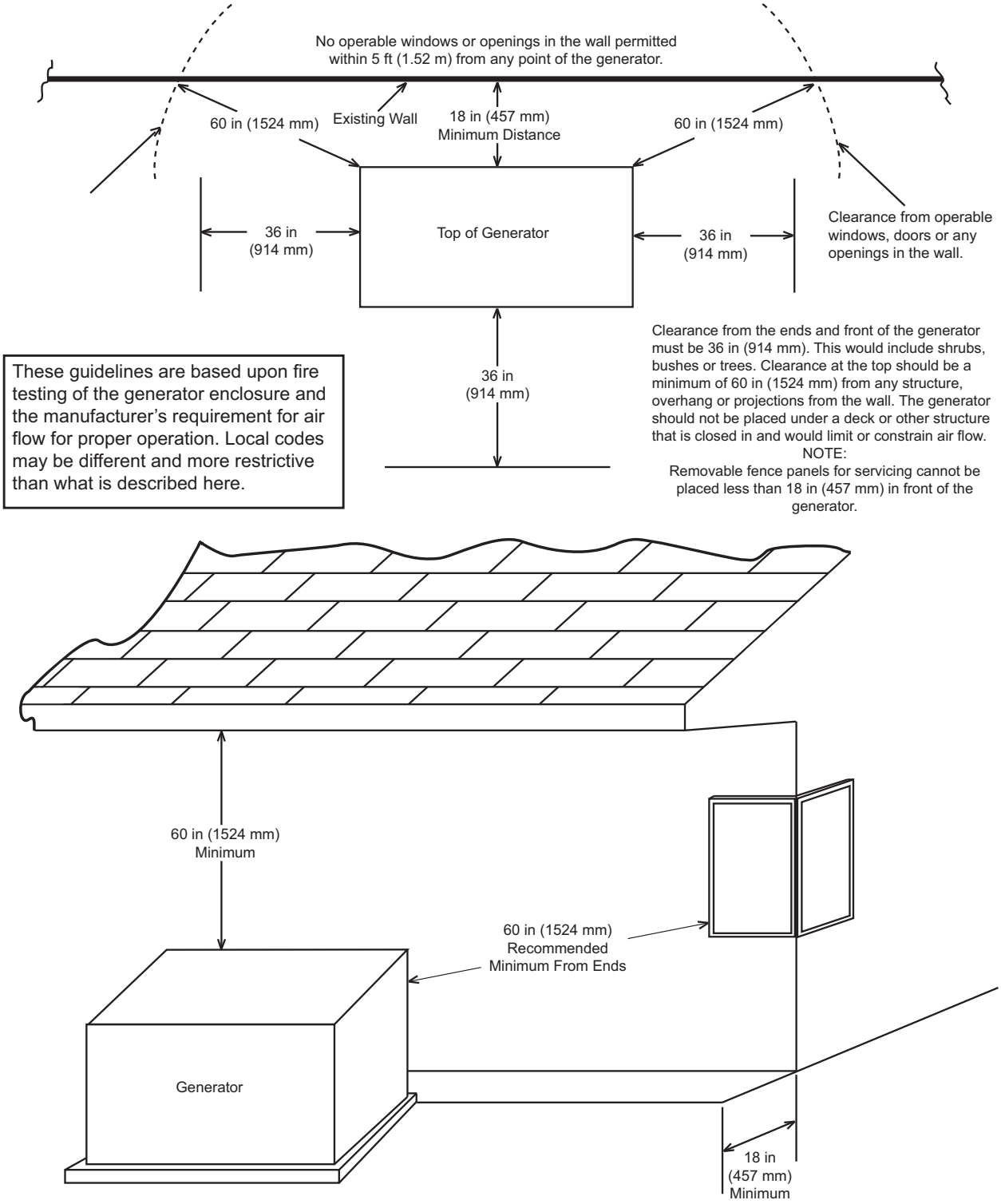

Figure 3.1 – Installation Guidelines

Install the generator set, in its protective enclosure, **outdoors**, where adequate cooling and ventilating air is always available (Figure 1.9). Consider these factors:

- The installation of the generator **must comply strictly with NFPA 37, NFPA 54, NFPA 58 and NFPA 70 standards.**
- Install the unit where air inlet and outlet openings will not become obstructed by leaves, grass, snow, etc. If prevailing winds will cause blowing or drifting, consider using a windbreak to protect the unit.
- Install the generator on high ground where water levels will not rise and endanger it. It should not operate in or be subjected to standing water.
- Allow sufficient room on all sides of the generator for maintenance and servicing. This unit must be installed in accordance with current applicable NFPA 37 and NFPA 70 standards, as well as any other federal, state and local codes for minimum distances from other structures. DO NOT install under wooden decks or structures unless there is at least 5 ft (1.52 m) of clearance above the generator, 3 ft (.91 m) of clearance on sides and front, and a minimum of 18 in (457 mm) of clearance at the back of the unit.
- Install the unit where rain gutter down spouts, roof run-off, landscape irrigation, water sprinklers or sump pump discharge does not flood the unit or spray the enclosure, including any air inlet or outlet openings.
- Install the unit where services will not be affected or obstructed, including concealed, underground or covered services such as electrical, fuel, phone, air conditioning or irrigation. This could affect Warranty Coverage.
- Where strong prevailing winds blow from one direction, face the generator air inlet openings to the prevailing winds.
- Install the generator as close as possible to the fuel supply to reduce the length of piping. REMEMBER THAT LAWS OR CODES MAY REGULATE THE DISTANCE AND LOCATION.
- Install the generator as close as possible to the transfer switch. REMEMBER THAT LAWS OR CODES MAY REGULATE THE DISTANCE AND LOCATION.
- The generator must be installed on a level surface. The generator must be level within a 0.5 in (13 mm) all around.
- The generator is typically placed on pea gravel, crushed stone or a concrete pad. Check local codes to see what type is required. If a concrete pad is required, all federal, state and local codes should be followed.

3.1.1 INSTALLATION GUIDELINES FOR STATIONARY AIR-COOLED 8, 11, 13, 14, 15, 16, 17 AND 20 KW GENERATORS

The National Fire Protection Association has a standard for the installation and use of stationary combustion engines. That standard is NFPA 37, its requirements limit the spacing of an enclosed generator set from a structure or wall (Figure 1.10).

NFPA 37, Section 4.1.4, Engines Located Outdoors: Engines, and their weatherproof housings if provided, that are installed outdoors shall be located at least 5 ft (1.52 m) from openings in walls and at least 5 ft (1.52 m) from structures having combustible walls. A minimum separation shall not be required where either of the following conditions exist:

1. The adjacent wall of the structure has a fire resistance rating of at least 1 hour.
2. The weatherproof enclosure is constructed of noncombustible materials and it has been demonstrated that a fire within the enclosure will not ignite combustible materials outside the enclosure.

Annex A — Explanatory Material

A4.1.4 (2) Means of demonstrating compliance are by means of full scale fire test or by calculation procedures.

Because of the limited spaces that are frequently available for installation, it has become apparent that exception (2) would be beneficial for many residential and commercial installations. With that in mind, the manufacturer contracted with an independent testing laboratory to run full scale fire tests to assure that the enclosure will not ignite combustible materials outside the enclosure.

NOTE: Southwest Research Institute tesing approves 18 in (457 mm) installation minimum from structure. Southwest Research is a nationally recognized third party testing and listing agency.

The criteria was to determine the worst case fire scenario within the generator and to determine the ignitability of items outside the engine enclosure at various distances. The enclosure is constructed of non-combustible materials, and the results and conclusions from the independent testing lab indicated that any fire within the generator enclosure would not pose any ignition risk to nearby combustibles or structures, with or without fire service personnel response.

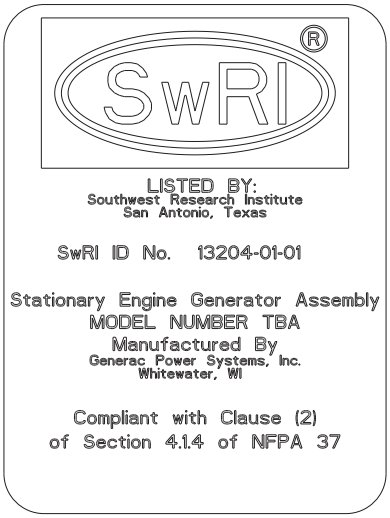

Figure 3.2 — Southwest Research Institute Decal (located inside the generator, next to the generator's data decal)
http://www.swri.org/4org/d01/fire/listlab/listprod/director.htm

Based on this testing and the requirements of NFPA 37, Sec 4.1.4, the guidelines for installation of the generators listed above are changed to 18 in (457 mm) from the back side of the generator to a stationary wall or building. For adequate maintenance and airflow clearance, the area above the generator should be at least **5 ft (1.52 m)** with a minimum of 3 ft (.91 m) at the front and ends of the enclosure. This would include trees, bushes and shrubs. Vegetation not in compliance with these clearance parameters could obstruct air flow. In addition, exhaust fumes from the generator could inhibit plant growth. See Figure 3.1 and the installation drawing within the owner's manual for details.

Generator exhaust contains DEADLY carbon monoxide gas. This dangerous gas can cause unconsciousness or death. Do not place the unit near windows, doors, fresh air intakes (furnaces, etc.) or any openings in the building or structure, including windows and doors of an attached garage.

⚠ WARNING!

If the generator is not set to the OFF mode, it can crank and start as soon as the battery cables are connected. If the utility power supply is not turned off, sparking can occur at the battery posts and cause an explosion.

3.2 SITE PREPARATION

- Locate the mounting area as close as possible to the transfer switch and fuel supply.
- Leave adequate room around the area for service access (check local code), and place high enough to keep rising water from reaching the generator.
- Choose an open space that will provide adequate and unobstructed airflow.
- Place the unit so air vents won't become clogged with leaves, grass, snow or debris. Make sure exhaust fumes will not enter the building through eaves, windows, ventilation fans or other air intakes (see the "Site Selection" section).
- Select the type of base, gravel or concrete, as desired or as required by local laws or codes. Verify your local requirements before selecting.

3.2.1 CRUSHED STONE OR GRAVEL

- Dig a rectangular area approximately 5 in (127 mm) deep and about 6 in (152 mm) longer and wider than the footprint of the generator. Cover with polyurethane film, if desired, and fill with pea gravel or crushed stone. Compact and level the stone. A concrete pad can be poured if desired or required. The pad should be 4-5 in (102-127 mm) thick and extend 6 in (152 mm) beyond the outside of the generator in all directions.

NOTE: If a concrete pad is required, follow all applicable Federal, State or local codes.

Figure 3.3 — Compacted Gravel Site

Figure 3.4 — Concrete Pad Site

After completing your SITE SELECTION and PREPARATION, time for Step 3:

SECTION 4 - GENERATOR PLACEMENT

Section 4 Generator Placement

4.1 GENERATOR PLACEMENT

With the Site Selection and Preparation performed, proceed with placement and installation of the generator itself.

All of the air-cooled generators come with a composite pad. The composite pad elevates the generator and helps prevent water from pooling around the bottom of the generator (Figure 3.1). You can place the generator with a composite pad on 4 in (102 mm) of pea gravel that is compacted or on a concrete pad. Check local codes to see what type of site base is required. If a concrete pad is required, all federal, state and local codes should be followed. Place the generator on its mounting pad and position correctly as per the dimensional information given in Section 2.

NOTE: Generator must be level within 0.5 in (13 mm).

Figure 4.1 — Composite pad

When mounting the generator to concrete, there are four mounting holes available for securing the generator, if codes require (two holes inside the front of the generator compartment and two holes in the back). See Figure 3.2.

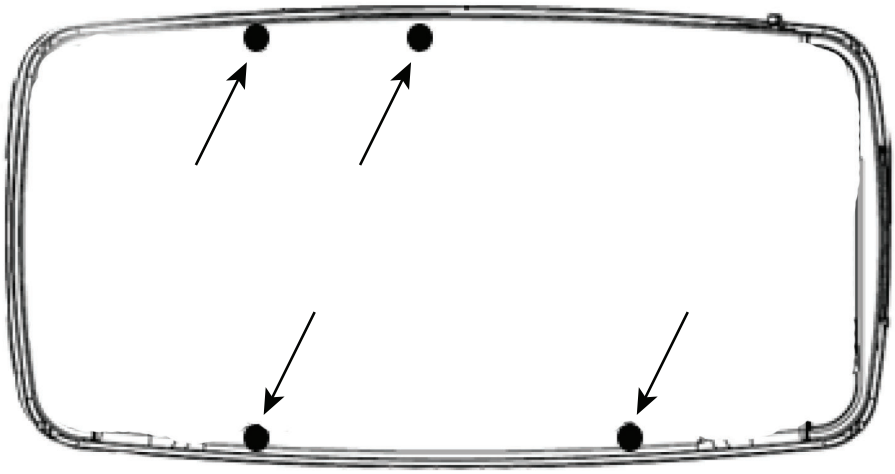

Figure 4.2 — Mounting Hole Location

3.2.2 FASCIA INSTALLATION (IF APPLICABLE)

- Locate the four (4) threaded black rubber bumpers located in the Owner's manual bag.
- Remove the four (4) bumpers from the bag and screw them into threaded holes located inside the end pieces of the fascia (two each) opposite one another (A).
- Once the bumpers are installed, snap one of the end pieces into one of the front / rear pieces of fascia. Repeat this action with the other two remaining pieces of fascia. NOTE: Do not assemble all four pieces together at this point (B).
- Place both assemblies at the base of the generator and fit the rubber bumpers into the lifting holes in the generator base (C).
- Once aligned, snap together the two remaining connection points.

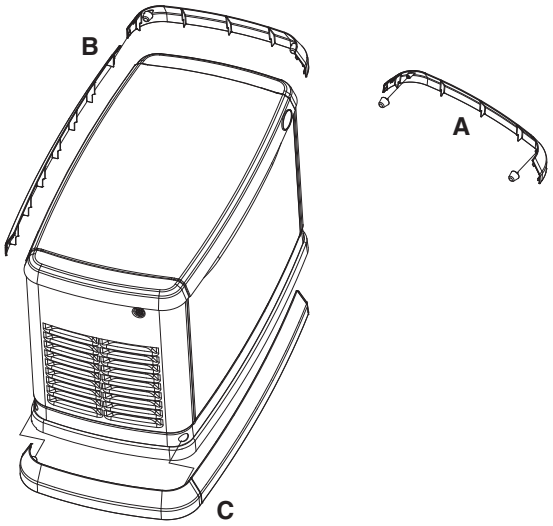

Figure 3.5 — Fascia Installation

After completing GENERATOR PLACEMENT, proceed to

Step 4:

SECTION 5 — FUEL CONVERSION / GAS REQUIREMENTS / CONNECTIONS

Section 5 Fuel Conversion / Gas Requirements / Connections

5.1 FUEL CONVERSION

The generator was configured for natural gas operation at the factory. Press and turn fuel knob 180° to switch over to LP Vapor.

NOTE: The orange fuel conversion knob is located on the top of the fuel mixer on the V-twin engine and under the fuel mixer on the single cylinder engine.

Press and turn the fuel knob towards the marked fuel source arrow until it stops. Fuel knob will rotate 180° and slide into the mixer body when converting to LP.

FUEL KNOB LOCATIONS SHOWN FROM GENERATOR AIR BOX SIDE VIEW

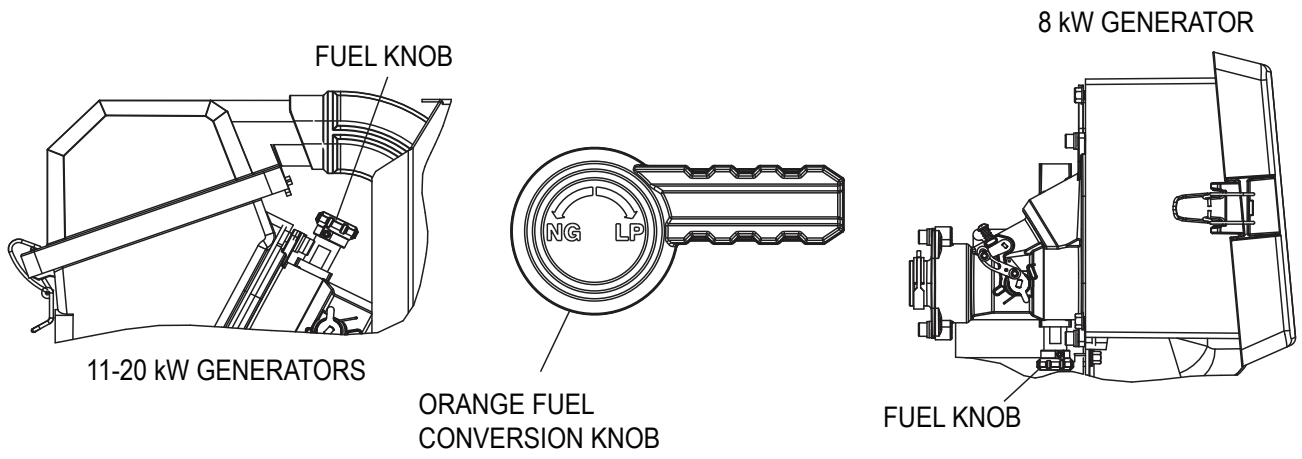

Figure 5.1 — Fuel Conversion Knob Location for Single and Twin Cylinder Generators

5.2 FUEL REQUIREMENTS AND RECOMMENDATIONS

With LP gas, use only the vapor withdrawal system. This type of system uses the vapors formed above the liquid fuel in the storage tank.

The engine has been fitted with a fuel carburetion system that meets the specifications of the 1997 California Air Resources Board for tamper-proof dual fuel systems. The unit will run on natural gas or LP gas, but it has been factory set to run on natural gas. Should the primary fuel need to be changed to LP gas, the fuel system needs to be reconfigured. See the Fuel Conversion section for instructions on converting the fuel system.

Recommended fuels should have a Btu content of at least 1,000 Btus per cubic foot (37.26 megajoules per cubic meter) for natural gas; or at least 2,500 Btus per cubic foot (93.15 megajoules per cubic meter) for LP gas. Ask the fuel supplier for the Btu content of the fuel.

Required fuel pressure for natural gas is 3.5-7" water column (7-13 mm mercury). Required fuel pressure for for liquid propane vapor is 10-12" water column (19-22 mm mercury). The primary regulator for the propane supply is NOT INCLUDED with the generator.

NOTE: All pipe sizing, construction and layout must comply with NFPA 54 for natural gas applications and NFPA 58 for liquid propane applications. Once the generator is installed, verify that the fuel pressure NEVER drops below it's required fuel pressure rating. For further information regarding NFPA requirements refer to their website at www.nfpa.org.

Prior to installation of the generator, the installer should consult local fuel suppliers or the fire marshal to check codes and regulations for proper installation. Local codes will mandate correct routing of gaseous fuel line piping around gardens, shrubs and other landscaping to prevent any damage.

Special considerations should be given when installing the unit where local conditions include flooding, tornados, hurricanes, earthquakes and unstable ground for the flexibility and strength of piping and their connections.

Use an approved pipe sealant or joint compound on all threaded fittings.

All installed gaseous fuel piping must be purged and leak tested prior to initial start-up in accordance with local codes, standards and regulations.

5.3 FUEL CONSUMPTION

NOTE: Required fuel pressure for natural gas is 3.5-7 in water column (7-13 mm mercury). The required fuel pressure for LP Vapor is 10-12 in water column (19-22 mm mercury).

These are approximate values, use the appropriate spec sheet or owner's manual for specific values.

Unit	Nat. Gas		LP Vapor	
	1/2 Load	Full Load	1/2 Load	Full Load
7 / 8 kW	78 / 2.21	121 / 3.43	0.87 / 3.29	1.42 / 5.37
10 / 11 kW	124 / 3.51	195 / 5.52	1.18 / 4.45	1.92 / 7.28
13 / 13 kW	157 / 4.45	255 / 7.22	1.64 / 6.2	2.95 / 11.15
14 / 14 kW	177 / 5.01	279 / 7.9	1.85 / 6.99	3.07 / 11.61
15 / 15 kW	185 / 5.24	296 / 8.38	1.83 / 6.91	2.86 / 10.82
16 / 16 kW	193 / 5.47	312 / 8.83	1.9 / 7.2	3.19 / 12.07
16 / 17 kW	193 / 5.47	312 / 8.83	1.99 / 7.53	3.57 / 13.53
18 / 20 kW	205 / 5.8	308 / 8.72	2.08 / 7.87	3.85 / 14.57

* Natural gas is in cubic feet per hour / cubic meters per hour.
** LP is in gallons per hour / liters per hour.
*** Values given are approximate.

Verify that gas meter is capable of providing enough fuel flow to include household appliances and all other loads.

⚠ DANGER!

Gaseous fuels such as natural gas and liquid propane (LP) gas are highly explosive. Even the slightest spark can ignite such fuels and cause an explosion. No leakage of fuel is permitted. Natural gas, which is lighter than air, tends to collect in high areas. LP gas is heavier than air and tends to settle in low areas.

NOTE: A minimum of one approved full flow manual shut-off valve must be installed in the gaseous fuel supply line. The valve must be easily accessible. Local codes determine the proper location.

NOTE: THE GAS SUPPLY AND PIPE MUST BE SIZED AT 100% LOAD BTU / MEGAJOULE RATING.

5.4 FUEL LINE SIZING

- First, determine what size pipe is required. Refer to NFPA 54 for NG or NFPA 58 for LP for further information.
- Always refer to the owner's manual for the proper BTU / megajoule and required gas pressures. To calculate BTU or Megajoules:
  - Natural Gas: BTU=Cubic feet / hour x 1000
    Megajoules=Cubic meters / hour x 37.26
  - Liquid Propane Vapor: BTU=Cubic feet / hour x 2500
    Megajoules=Cubic meters / hour x 93.15
- Start by measuring the distance from the generator to the gas source. The generator should be plumbed directly from the source, not off the end of an existing system.
- When measuring the pipe length, add 2.5 ft (.76 m) for every angle or bend in the pipe and add that to the overall pipe distance.

5.4.1 NATURAL GAS PIPE SIZING

To properly use this chart, find the kW rating of the generator in the left column, and trace to the right. The number to the right is the maximum length (measured in feet / meters) allowed for the pipe sizes on top. The pipe sizes are measured by inside diameter (ID) to include any fittings, valves (must be full flow), elbows, tees or angles. Add 2.5 ft (.76 m) per any bend, tee or angle in the pipe to the overall distance.

	Pipe Size (in. / mm)				
kW	**.75 / 19**	**1 / 25**	**1.25 / 32**	**1.5 / 38**	**2 / 51**
7-8	55 / 16.76	200 / 60.96	820 / 249.94		
11	20 / 6.1	85 / 25.91	370 / 112.78	800 / 243.84	
13-14	10 / 3.05	50 / 15.24	245 / 74.68	545 / 166.12	
16-17		40 / 12.19	190 / 57.91	425 / 129.54	
20		20 / 6.1	130 / 39.62	305 / 92.96	945 / 288.04
For 5-7” of water column (9-13mm mercury)					

	Pipe Size (in. / mm)			
kW	**.75 / 19**	**1 / 25**	**1.25 / 32**	**1.5 / 38**
7-8	20 / 6.1	60 / 18.29	175 / 53.34	
11		30 / 9.14	125 / 38.1	200 / 60.96
13-14		20 / 6.1	80 / 24.38	175 / 53.34
16-20		10 / 3.05	60 / 18.29	125 / 38.1
For pressures below 5" of water column (9mm mercury) down to 3.5” of water column (7mm mercury)				

5.4.2 LP VAPOR PIPE SIZING

To properly use this chart, find the kW rating of the generator in the left column, and trace to the right. The number to the right is the maximum length (measured in feet / meters) allowed for the pipe sizes on top. The pipe sizes are measured by inside diameter (ID) to include any fittings, valves (must be full flow), elbows, tees or angles. Add 2.5ft. (.76m) per any bend, tee or angle in the pipe to the overall distance.

NOTE: Pipe sizes are using a second stage regulator.

NOTE: The minimum LP tank size is 250 gallons (946 L), unless unit calculations dictate use of a larger tank. Vertical tanks, which are measured in pounds (or kilograms), will not usually meet the minimum tank size requirement. A 1050 lb (476 kg) vertical tank size minimum is required.

	Pipe Size (in. / mm)		
kW	**.75 / 19**	**1 / 25**	**1.25 / 32**
7-8	165 / 50.29	570 / 173.74	
11	70 / 21.33	255 / 77.72	1000 / 304.8
13-14	45 / 13.72	170 / 51.82	690 / 210.31
16-17	25 / 7.62	130 / 39.62	540 / 164.59
20	15 / 4.57	115 / 35.05	480 / 146.3

5.4.3 GAS INSTALLATION SUMMARY

GAS PIPE SIZING IS ONE OF THE MOST COMMONLY MADE MISTAKES. A PROPERLY SIZED GAS PIPE IS CRITICAL TO THE PROPER OPERATION OF THE GENERATOR. THE GENERATOR INLET SIZE HAS NO BEARING ON THE PROPER GAS PIPE SIZE.

NOTE: THE GAS SUPPLY AND PIPE MUST BE SIZED AT 100% LOAD BTU / MEGAJOULE RATING.

5.5 INSTALLING & CONNECTING GAS LINES

1. Both natural gas and LP Vapor are highly volatile substances, so strict adherence to all safety procedures, codes, standards and regulations is essential.
   Gas line connections should be made by a certified plumber familiar with local codes. Always use AGA-approved gas pipe and a quality pipe sealant or joint compound.
   Verify the capacity of the natural gas meter or the LP tank in regards to providing sufficient fuel for both the generator and other operating appliances.

- Fuel Regulator installed per laws or regulator manufacturer’s specifications
- AGA approved gas pipe
- Flexible fuel line
  - Do not bend!!!
  - Do not attach directly to generator
  - Check all connections for leaks
- Sediment trap near generator (if applicable or required by code)
- Full flow rated shut-off near generator per local jurisdiction or code

2. Most applications will require an external manual full flow shutoff valve on the fuel line.

Figure 5.2 — Full Flow Shutoff Valve

3. When connecting the gas line to the generator, use the provided section of UL Listed or AGA-approved flexible fuel line in accordance with local regulations. The purpose of the flexible fuel line is to ensure that vibration from the generator does not cause a gas leak at one of the connection points, so it's important that the line be installed with as few bends as possible. Configure the sediment trap (if applicable or required by code) as illustrated.

Figure 5.3 — Sediment Trap

Figure 5.4 — Incorrect Routing of Flexible Hose

4. Never bend the flexible fuel line to avoid using an elbow. Bending the flexible line decreases its ability to absorb vibrations and defeats its purpose, as well as constricts the actual fuel flow. See Figure 5.5.
5. Check for leaks by spraying all connection points with a soap solution made of dishwashing soap and water. You should not see the solution be "blown away" or form "bubbles". Next, check the gas pressure at the regulator in the generator by following these steps.
   – Close gas supply valve.
   – Remove the top gas pressure test port from the regulator (see Figure 5.6) and install the gas pressure tester (manometer).
   – Open the gas supply valve and ensure that the pressure is within the specified values.

NOTE: See owner's manual or spec sheet for proper fuel pressure specifications. If the gas pressure is not within specifications, contact the local gas supplier.

4) Close gas valve when completed.

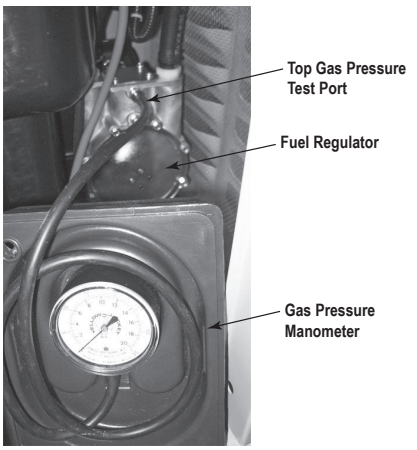

Figure 5.5 — Checking Pressure with Manometer

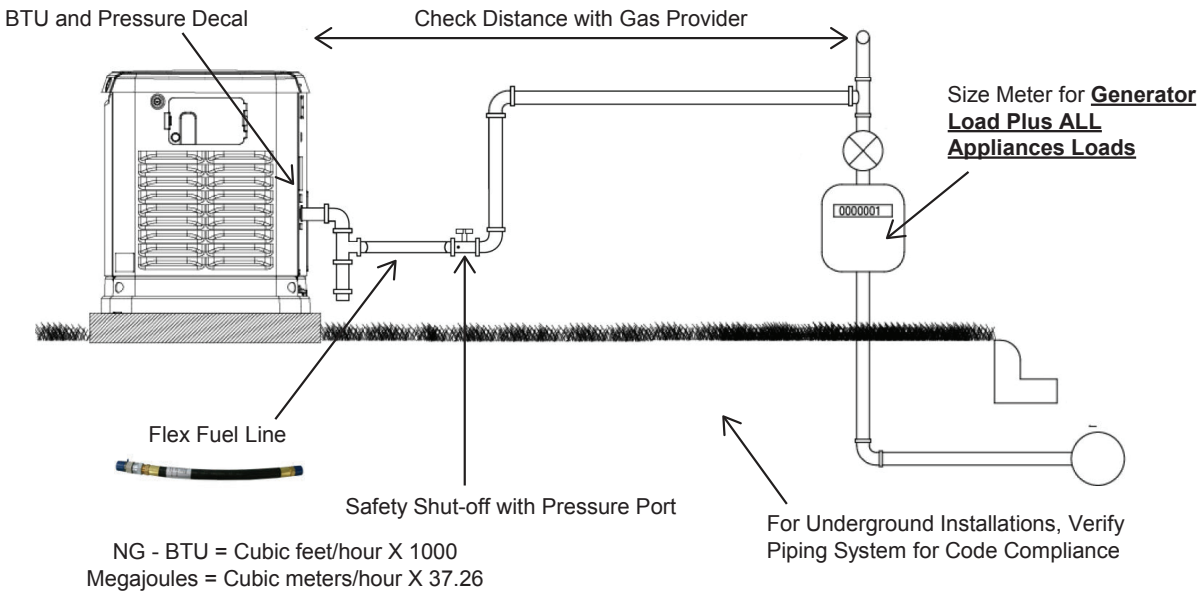

Size gas pipe with Pipe Sizing Guide or to local codes.

Figure 5.6 — Typical Natural Gas Vapor Installation

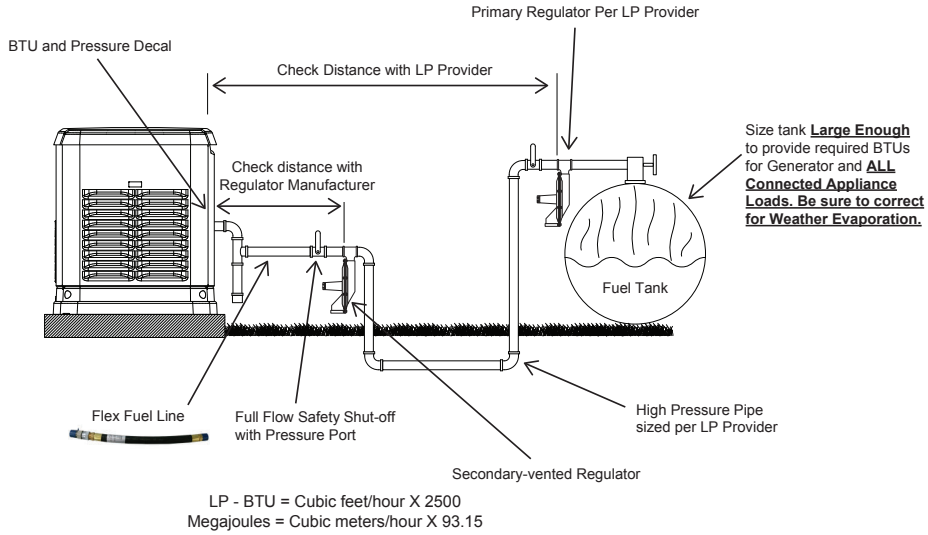

Size gas pipe from secondary regulator with Pipe Sizing Guide or to local codes.

Figure 5.7 — Typical LP Vapor Installation

NOTE: When sizing a secondary regulator for LP or high pressure natural gas applications be sure to note the maximum individual load capabilities which will be lower than total capacity. This could impact generator starting performance if sized too small.

NOTE: It is not recommended to reduce the fuel pipe size exiting the secondary regulator unless necessary to accommodate the ½" or ¾" flexible fuel line that is shipped with the generator. This may potentially cause starting or performance issues.

After completing GAS REQUIREMENTS / CONNECTIONS / FUEL CONVERSION, it's time for Step 5: SECTION 6 — ELECTRICAL CONNECTIONS

Section 6 Electrical Connections

6.1 GENERATOR CONNECTIONS

NOTE: Control wiring may be already wired on pre-wired generators. If so, tighten the 5' whip conduit inside of the enclosure. If not, wiring must be in accordance with local jurisdiction and codes.

1. Remove the appropriate Main AC/Control Wiring Knock-out Plug from the back of the generator.
2. Install the conduit and Main AC and Control Wires between the generator and the transfer switch. See Figure 2.6 for knockout locations (verify specific transfer switch wiring/connections per model).

NOTE: These wiring connections may be present on pre-wired models.

NOTE: This wiring can be run in the same conduit if the appropriate insulation rated wire is used.

3. Seal the conduit at the generator and in compliance with any codes.
4. Strip the insulation from the ends of the wires. Do not remove excessive insulation.
5. To connect the control wires, push down on the spring loaded connection point with a flat head screwdriver, insert wire and release.

NOTE: No wire insulation should be in the connection point, only bare wire.

6.2 CONTROL WIRING

Control Wire Recommended Length and Size	
Maximum Wire Length	**Recommended Wire Size**
1-115 ft (1-35 m)	No. 18 AWG
116-185 ft (36-56 m)	No. 16 AWG
186-295 ft (57-89 m)	No. 14 AWG
296-460 ft (90-140 m)	No. 12 AWG

CONTROL PANEL CONNECTIONS		
Terminal Numbering Decal		**Wire Numbers**
A	**YELLOW #1 & #2**	N1 & N2 - 240 VAC - Sensing for Utility Dropout and Pickup
B	**BLUE #3**	T1 - Fused 120VAC for Battery Charger (see NOTE)
C	**BLACK #3**	0 - DC (-) Common Ground Wire
D	**RED #4**	194 - DC (+) 12 VDC for Transfer Controls
E	**WHITE #5**	23 - Transfer Control Signal Wire

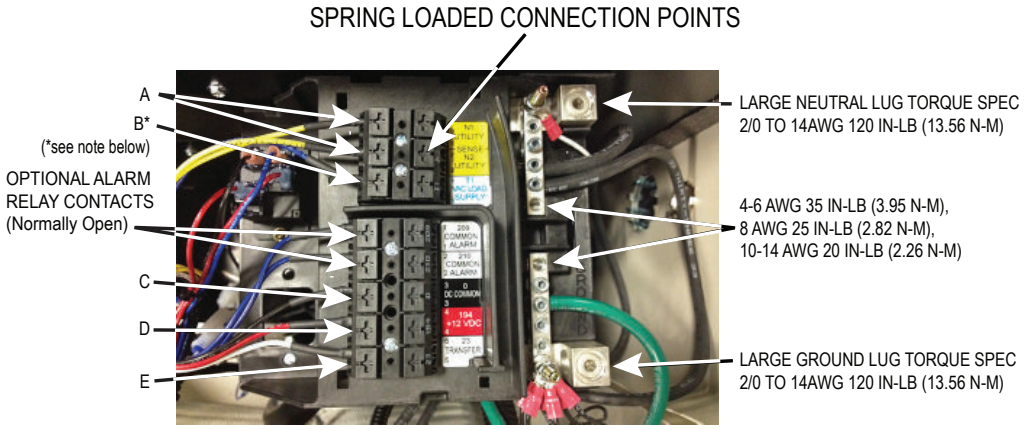

Figure 6.1 — Control Wiring (found behind control board)

NOTE: *Wires 23, 194 and 0 must be run through the provided wire shielding provided in the manual bag to separate the low voltage from the high voltage wires unless the requirement of 300.3(c)(1) of the NEC are met (see the Parts Shipped Loose section).

NOTE: Must be connected to keep battery charged whether unit is running or not.

6.3 MAIN AC WIRING

Figure 6.2 — Main AC Wiring

NOTE: Main AC wiring must be in accordance with local jurisdiction and codes.

6. Strip the insulation off the wire ends. Do not remove excessive insulation.
7. Remove the two cap plugs located behind the breaker door and to the right of the Main Breaker.
8. Loosen the lugs of the Main Breaker through the access holes.
9. Insert a power wire (E1 or E2) through the opening in the back cover and into the bottom lug. Torque to the proper specification.

NOTE: There are three (3) screws inside the top of the breaker panel (behind the breaker door). Removing these screws will allow the entire breaker box to be carefully pulled out. When reinstalling, be certain that the tabs on the bottom lock into place.

10. Connect the Neutral wire to the Neutral Lug and torque to the required specification. See Figure 6.1.
11. Connect the Ground wire to the Ground Lug and torque to the required specification. See Figure 6.1.

NOTE: Neutral Bonding - For installations that require the neutral to be bonded to the ground, this is to be done on the customer connections terminals inside the generator. Connect a suitably sized wire from the neutral bar to the ground bar. This is normally required when the generator is the source in a separately derived system. It is not required when the generator is a backup source in a utility supplied electrical system with a 2-pole transfer switch. See Figure 6-1.

NOTE: Torque all wiring lugs, bus bars and connection points to the proper torque specifications. Torque specifications for the Main Line Circuit Breaker (MLCB) can be found on a decal located on the inside of the Main Line Circuit Breaker Door.

6.4 BATTERY REQUIREMENTS

Group 26R, 12V, 525 CCA (Minimum CCA)

6.5 BATTERY INSTALLATION

Fill the battery with the proper electrolyte fluid if necessary and have the battery fully charged before installing it.

Before installing and connecting the battery, complete the following steps:

1. Verify that the generator has been turned OFF.
2. Turn off utility power supply to the transfer switch.
3. Remove the 7.5 Amp fuse from the generator control panel.

Battery cables were factory connected at the generator. See Figure 6.3. Connect cables to battery posts as follows:

4. Connect the red battery cable (from starter contactor) to the battery post indicated by a positive, POS or (+).
5. Connect the black battery cable (from frame ground) to the battery post indicated by a negative, NEG or (—).
6. Install the red battery post cover (included).

NOTE: Dielectric grease should be used on battery posts to aid in the prevention of corrosion.

NOTE: Damage will result if battery connections are made in reverse.

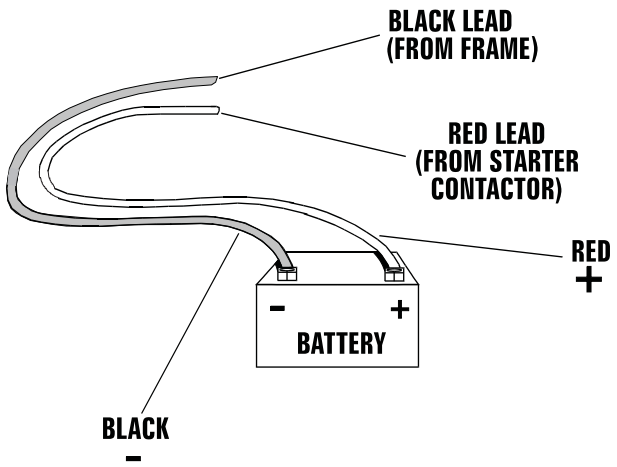

Figure 6.3 – Battery Cable Connections

NOTE: In areas where temperatures regularly fall below 32 °F (0 °C), it is recommended that a pad type battery heater be installed to aid in cold climate starting. This is available as a cold weather kit through an authorized service dealer.

With the ELECTRICAL CONNECTIONS completed,

proceed to the final step - Step 6:
SECTION 7 — CONTROL PANEL / ACTIVATION / START-UP / TESTING

Section 7 Control Panel / Activation / Start-up / Testing

7.1 CONTROL PANEL INTERFACE

7.1.1 USING THE AUTO / MANUAL / OFF BUTTONS (FIGURE 7.1)

⚠ WARNING!

With the AUTO button pushed in, the engine may crank and start at any time without warning. Such automatic starting occurs when utility power source voltage droops below a preset level or during the normal exercise cycle. To prevent possible injury that might be caused by such sudden starts, always push the OFF button, remove the fuses, and disconnect the battery before working on or around the generator or transfer switch. Then, place a "DO NOT OPERATE" tag on the generator panel and on the transfer switch.

1. "OFF" Button – This button shuts down the engine and prevents automatic operation.
2. "MANUAL" Button – This button cranks and starts the engine. Transfer to standby power will not occur unless there is a utility failure.
3. "AUTO" Button – Selecting this button activates fully automatic system operation. It also allows the unit to automatically start and exercise the engine every seven days with the setting of the exercise timer (see the Setting the Exercise Timer section).

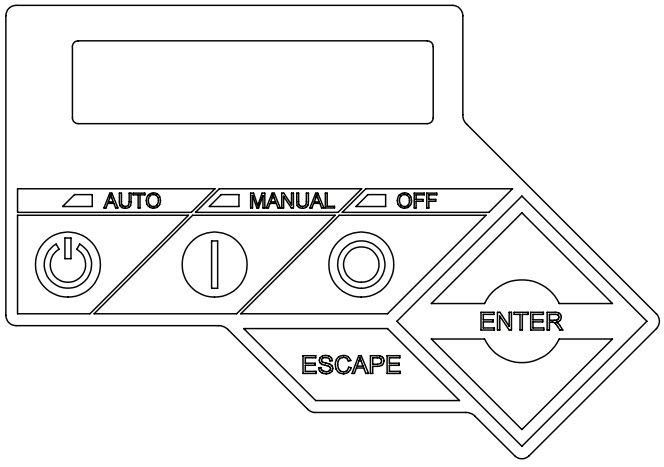

Figure 7.1 – 8/11/13/14/15/16/17/20 kW Generator Control Panel

Display Interface Menus

The LCD display is organized as detailed below:

- The “Home” page is the default page that will be displayed if no keys are pressed for five (5) minutes. This page normally shows the current Status message and the current date and time. The highest priority active Alarm and/or Warning will be automatically posted on this page as well, and the backlight will flash when such an event is detected. In the case of multiple Alarms or Warnings, only the first message will be displayed. To clear an Alarm or Warning, press the OFF button and then press the ENTER key.
- The display backlight is normally off. If the user presses any key, the backlight will come on automatically and remain on for 30 seconds after the last key was pressed.
- The “Main Menu” page will allow the user to navigate to all other pages or sub-menus by using the Up/Down and Enter keys. This page can be accessed at any time with several presses of the Escape key. Each press of the Escape key takes you back to the previous menu until the main menu is reached. This page displays the following options: HISTORY, STATUS, EDIT AND DEBUG. (See the Menu System Diagram in the Owner’s Manual).)

7.2 GENERATOR ACTIVATION

When battery power is applied to the generator during the installation process, the controller will light up. However, the generator still needs to be activated before it will automatically run in the event of a power outage.

Activating the generator is a simple, one-time process that is guided by the controller screen prompts. Once the product is activated, the controller screen will not prompt you to activate again, even if you disconnect the generator battery.

After obtaining your activation code, please complete the following steps at the generator’s control panel in the Activation Chart.

Upon first power up of the generator, the display interface will begin an installation wizard. The installation wizard will prompt the user to set the minimum settings to operate the generator. These settings are: Current Date/Time and Exercise Day/Time. The maintenance intervals will be initialized when the exercise time is entered.

The exercise settings can be changed at any time via the “EDIT” menu.

If the 12 volt battery is disconnected or the fuse removed, the installation wizard will operate upon power restoration. The only difference is the display will only prompt the customer for the current Time and Date.

7.2.1 SETTING THE EXERCISE TIMER

This generator is equipped with an exercise timer. Once it is set, the generator will start and exercise every seven days, on the day of the week and at the time of day specified. During this exercise period, the unit runs for approximately 12 minutes and then shuts down. Transfer of loads to the generator output does not occur during the exercise cycle unless utility power is lost.

IF THE INSTALLER TESTS THE GENERATOR PRIOR TO INSTALLATION, PRESS THE “ENTER” BUTTON TO SKIP SETTING UP THE EXERCISE TIMER.

17 and 20 kW units can run at 2,400 rpm while exercising. While providing the necessary periodic exercise operation, the lower rpm also reduces fuel consumption, engine wear and noise.

NOTE: The exerciser will operate only when the generator is placed in the AUTO mode and will not work unless this procedure is performed. The current date/time will need to be reset every time the 12 volt battery is disconnected and then reconnected, and/or when the fuse is removed.

7.3 BEFORE INITIAL START-UP

NOTE: These units have been run and tested at the factory prior to being shipped and do not require any type of break-in.

⚠ CAUTION!

Never operate the engine with the oil level below the “Add” mark on the dipstick. Doing this could damage the engine.

NOTE: This unit comes filled with 30 weight organic oil from the factory. Check the oil level and add the appropriate viscosity and amount if necessary.

ACTIVATION CHART

		TROUBLESHOOTING
Display Reads: 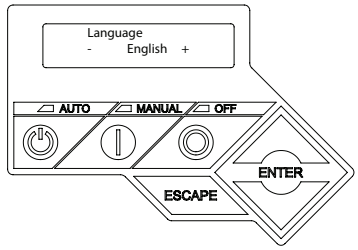	Use ARROW keys to scroll to desired language. Press ENTER to select.	If the wrong language is chosen, it can be changed later using the “edit” menu.
Display Reads: 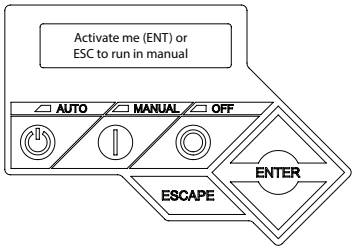	Press ENTER to begin the activation process.	If ESCAPE is pressed instead of ENTER, the generator will only run in manual mode (for test purposes) and NOT ACTIVATED will be displayed. You will need to remove the 7.5 Amp generator control panel fuse AND disconnect the T1, N1 and N2 connector in the external connection box (if equipped); or disconnect utility input (main breaker) to the transfer switch for 3-5 seconds and reconnect, then begin with Step 1.
Display Reads: 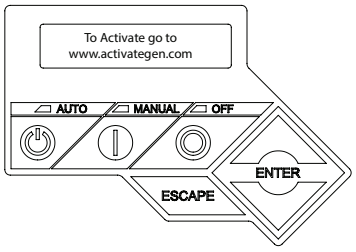	If you do not have your activation code, go to www.activategen.com or call 1-888-9ACTIVATE (922-8482 , US & CA only). If you already have your activation code, wait 3-5 seconds for the next display.	
Display Reads: 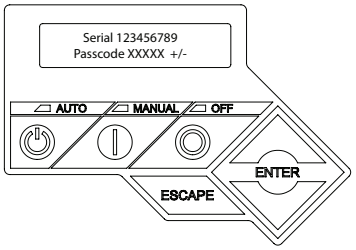	Use ARROW keys to scroll and find the first number of your Activation Code. Press ENTER to select. Repeat this step until all digits have been entered. Use ESCAPE to correct previous digits.	
Display Reads: 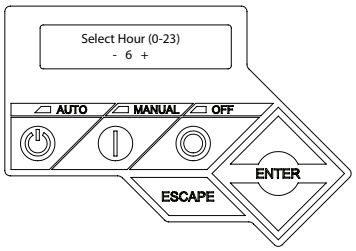	Activation is complete when all digits are entered above and your screen shows this display. Follow the controller prompts to continue setting the time function. Refer to your Owner’s Manual with questions.	What happens if “Wrong Passcode Try Again” appears? Reenter the activation code. If a second attempt is unsuccessful, check the number against the code given on activategen.com. If it is correct and the generator will not accept it, contact 1-888-9ACTIVATE (922-8482 , US & CA only).

Figure 7.2 – Activation Sequence

7.3.1 Installation Assistant

Interconnect System Self Test Feature (follow the on-screen prompts)

Upon power up, this controller will go through a system self test which will check for the presence of utility voltage on the DC circuits. This is done to prevent damage if the installer mistakenly connects AC utility power sense wires into the DC terminal block. If utility voltage is detected, the controller will display a warning message and lock out the generator, preventing damage to the controller. Power to the controller must be removed to clear this warning.

Utility voltage must be turned on and present at the N1 and N2 terminals inside the generator control panel for this test to be performed and pass.

NOTE: The generator is to be run with all appropriate panels in place, including during troubleshooting by a technician.

7.3.2 Before starting, complete the following:

1. Ensure that the generator is OFF.
2. Set the generator's main circuit breaker to the OFF (or OPEN) position.
3. Turn off all breakers that will be powered by the generator.
4. Check the engine crankcase oil level and, if necessary, fill to the dipstick FULL mark with the recommended oil. Do not fill above the FULL mark.
5. Check the fuel supply. Gaseous fuel lines must have been properly purged and leak tested in accordance with applicable fuel-gas codes. All fuel shutoff valves in the fuel supply lines must be open.

During initial start up only, the generator may exceed the normal number of start attempts and experience an "overcrank" fault. This is due to accumulated air in the fuel system during installation. Reset the control board by pushing the OFF button and ENTER key, and restart up to two more times if necessary. If unit fails to start, contact a local dealer for assistance.

7.4 CHECK MANUAL TRANSFER SWITCH OPERATION

Refer to the "Manual Transfer Operation" section of the owner's manual for procedures.

⚠ DANGER!

⚠ Do not attempt manual transfer switch operation until all power voltage supplies to the transfer switch have been positively turned off. Failure to turn off all power voltage supplies will result in extremely hazardous and possibly fatal electrical shock.

7.5 ELECTRICAL CHECKS

Complete electrical checks as follows:

1. Ensure that the generator is OFF.
2. Set the generator's main circuit breaker to the OFF (or OPEN) position.
3. Turn OFF all circuit breakers/electrical loads that will be supplied by the generator.
4. Turn on the utility power supply to the transfer switch using the means provided (such as a utility main line circuit breaker).

⚠ DANGER!

⚠ The transfer switch is now electrically "hot." Contact with "hot" parts will result in extremely hazardous and possibly fatal electrical shock. Proceed with caution.

5. Use an accurate AC voltmeter to check utility power source voltage across transfer switch terminals N1 and N2. Nominal line-to-line voltage should be 240 volts AC. If it's not, verify AC output and wiring from utility source to N1 and N2 lugs at transfer switch.
6. Check utility power source voltage across terminals N1 and the transfer switch neutral lug; then across terminal N2 and neutral. Nominal line-to-neutral voltage should be 120 volts AC. If it's not, verify AC output and wiring from utility source to N1 and N2 lugs at transfer switch.
7. When certain that utility supply voltage is compatible with transfer switch and load circuit ratings, turn OFF the utility power supply to the transfer switch.
8. On the generator panel, push the MANUAL button. The engine should crank and start.
9. Let the engine warm up for about five minutes to allow internal temperatures to stabilize. Then, set the generator's main circuit breaker to its ON (or CLOSED) position.

⚠ DANGER!

⚠ Proceed with caution! Generator power voltage is now supplied to the transfer switch. Contact with live transfer switch parts will result in dangerous and possibly fatal electrical shock.

10. Connect an accurate AC voltmeter and a frequency meter across transfer switch terminal lugs E1 and E2. Voltage should be 238-242 at a frequency of 59.5-60.5 Hertz. If it's not, verify that the MLCB is closed and verify AC output and frequency (Hertz or Hz) at the MLCB. Also verify wiring from generator to E1 and E2 lugs at transfer switch.

11. Connect the AC voltmeter test leads across terminal lugs E1 and neutral; then across E2 and neutral. In both cases, voltage reading should be 119-121 volts AC. If it's not, verify that the MLCB is closed and verify AC output between the E1 and E2 of the MLCB and Neutral at the generator. Also, verify wiring from generator to E1, E2 ans Neutral lugs at transfer switch.
12. Set the generator's main circuit breaker to its OFF (or OPEN) position.
13. Push the generator's OFF button. The engine should shut down.

NOTE: It is important not to proceed until certain that generator AC voltage and frequency are correct and within the stated limits.

7.6 GENERATOR TESTS UNDER LOAD

To test the generator set with electrical loads applied, proceed as follows:

1. Ensure that the generator is OFF.
2. Turn OFF all breakers/electrical loads that will be powered by the generator.
3. Turn OFF the utility power supply to the transfer switch, using the means provided (such as a utility main line circuit breaker).

⚠ WARNING!

⚠ Do not attempt manual transfer switch operation until all power voltage supplies to the transfer switch have been positively turned off. Failure to turn off all power voltage supplies will result in extremely hazardous and possibly fatal electrical shock.

4. Manually set the transfer switch to the STANDBY position, i.e., load terminals connected to the generator's E1/E2 terminals. The transfer switch operating lever should be down.
5. Push the generator's MANUAL button. The engine should crank and start immediately.
6. Let the engine stabilize and warm up for a few minutes.
7. Set the generator's main circuit breaker to its ON (or CLOSED) position. Loads are now powered by the standby generator.
8. Turn ON the circuit breaker/electrical loads that are powered by the generator one by one.
9. Connect a calibrated AC voltmeter and a frequency meter across terminal lugs E1 and E2. Voltage should be approximately 240 volts and frequency should be 60 Hz. If the voltage and frequency are rapidly dropping as the loads are applied, the generator may be overloading or there may be a fuel issue. Check amperage value of loads and/or fuel pressure.
10. Let the generator run at full rated load for 20-30 minutes. Listen for unusual noises, vibration or other indications of abnormal operation. Check for oil leaks, evidence of overheating, etc.
11. Verify gas pressure while under full load.
12. When testing under load is complete, turn OFF electrical loads.
13. Set the generator's main circuit breaker to the OFF (or OPEN) position.
14. Let the engine run at no-load for 2-5 minutes.
15. Push the generator's OFF button. The engine should shut down.

7.7 CHECKING AUTOMATIC OPERATION

To check the system for proper automatic operation, proceed as follows:

1. Ensure that the generator is OFF.
2. Install front cover of the transfer switch.
3. Turn ON the utility power supply to the transfer switch, using the means provided (such as a utility main line circuit breaker).

NOTE: Transfer Switch will transfer back to utility position.

4. Set the generator's main circuit breaker to its ON (or CLOSED) position.
5. Push the generator's AUTO button. The system is now ready for automatic operation.
6. Turn OFF the utility power supply to the transfer switch.

With the generator ready for automatic operation, the engine should crank and start when the utility source power is turned OFF after a 10 second delay (factory default setting). After starting, the transfer switch should connect load circuits to the standby side after a five (5) second delay. Let the system operate through its entire automatic sequence of operation.

With the generator running and loads powered by generator AC output, turn ON the utility power supply to the transfer switch. The following should occur:

- After approximately 15 seconds, the switch should transfer loads back to the utility power source.
- Approximately one minute after re-transfer, the engine should shut down.

7.8 INSTALLATION SUMMARY

1. Ensure that the installation has been properly performed as outlined by the manufacturer and that it meets all applicable laws and codes.
2. Test and confirm proper operation of the system as outlined in the appropriate installation and owner's manuals.
3. Educate the end-user on the proper operation, maintenance and service call procedures.

Important! If the end user ever finds it necessary to turn the generator off during prolonged utility outages to perform maintenance or conserve fuel, educate them on these simple, but important steps:

To turn the generator OFF (while running in AUTO and online):

1. Turn OFF (or OPEN) the main Utility disconnect.
2. Turn OFF (or OPEN) the Main Line Circuit Breaker (MLCB) on the generator.
3. Turn the generator OFF.

To turn the generator back ON:

1. Put the generator back into AUTO and allow to start and warm-up for a few minutes.
2. Turn ON (or CLOSE) the MLCB on the generator.

The system will now be operating in its automatic mode. The main utility disconnect can be turned ON (or CLOSED), but to shut the unit off, this complete process must be repeated.

Section 8 Troubleshooting

PROBLEM	CAUSE	CORRECTION
The engine will not crank.	1. Fuse blown.	1. Correct short circuit condition by replacing 7.5 Amp fuse in generator control panel.
	2. Loose, corroded or defective battery cables.	2. Tighten, clean or replace as necessary.*
	3. Defective starter contact.	3. *See #2.
	4. Defective starter motor.	4. *See #2.
	5. Dead Battery.	5. Charge or replace battery.
The engine cranks but will not start.	1. Out of fuel.	1. Replenish fuel / Turn on fuel valve.
	2. Defective fuel solenoid (FS).	2. *
	3. Open #14 wire from engine control board.	3. Repair wiring.
	4. Defective spark plug(s).	4. Clean, re-gap or replace plug(s).
	5. Valve lash out of adjustment.	5. Reset valve lash.
The engine starts hard and runs rough.	1. Air cleaner plugged or damaged.	1. Check / replace air cleaner.
	2. Defective spark plug(s).	2. Clean, re-gap or replace plug(s).
	3. Fuel pressure incorrect.	3. Confirm fuel pressure to regulator is 10-12” water column (19-22 mm mercury) for LP, and 3.5 - 7” water column (7 - 13 mm mercury) for natural gas.
	4. Fuel selector in wrong position.	4. Move selector to correct position..
The generator is set to OFF, but the engine continues to run.	1. Controller wired incorrectly	1. Repair wiring or replace controller.
	2. Defective control board.	2. *
There is no AC output from the generator.	1. Main line circuit breaker is in the OFF (or OPEN) position.	1. Reset circuit breaker to ON (or CLOSED).
	2. Generator internal failure.	2. *
There is no transfer to standby after utility source failure.	1. Main line circuit breaker is in the OFF (or OPEN position).	1. Reset circuit breaker to ON (or CLOSED).*
	2. Defective transfer switch coil	2. *
	3. Defective transfer relay	3. *
	4. Transfer relay circuit open	3. *
	5. Defective control logic board.	5. *
Unit consumes large amounts of oil.	1. Engine over filled with oil.	1. Adjust oil to proper level.
	2. Engine breather defective.	2. *
	3. Improper type or viscosity of oil.	3. See “Engine Oil Recommendations”.
	4. Damaged gasket, seal or hose.	4. Check for oil leaks.
* Contact an Authorized Service Dealer for assistance.		

Section 9 Quick Reference Guide

Problem	LED	Things to Check	Active Alarm	Solution
Unit running in AUTO but no power in house.	GREEN	Check MLCB.	NONE	Check MLCB if the MLCB is in the ON position. If it is in the ON position contact the servicing dealer.
Unit shuts down during operation.	RED	Check the LED's / Screen for alarms.	HIGH TEMPERATURE	Check ventilation around the generator, intake, exhaust and rear of generator. If no obstruction contact serving dealer.
Unit shuts down during operation.	RED	Check the LED's / Screen for alarms.	OVERLOAD REMOVE LOAD	Clear alarm and remove household loads from the generator. Put back in AUTO and restart.
Unit was running and shuts down, attempts to restart.	RED	check the LED's / Screen for alarms.	RPM SENSE LOSS	Clear alarm and remove household loads from the generator. Put back in AUTO and restart. It may be a fuel issue so contact the servicing dealer.
Unit will not start in AUTO with utility loss.	NONE	See if screen says unit not activated.	NOT ACTIVATED	Refer to activation section in owners manual.
Unit will not start in AUTO with utility loss.	GREEN	Check screen for start delay countdown.	None	If the start up delay is greater than expected, contact servicing dealer to adjust from 2 to 1500 seconds.
Unit will not start in AUTO with utility loss.	RED	Check the LED's / Screen for alarms.	LOW OIL PRESSURE	Check Oil Level / Add Oil Per Owners Manual. If oil level is correct contact servicing dealer.
Unit will not start in AUTO with utility loss.	RED	Check the LED's / Screen for alarms.	RPM SENSE LOSS	Clear alarm. Check the battery using the control panel under the MAIN menu using the BATTERY MENU option. If it states battery is GOOD contact servicing dealer. If it states CHECK BATTERY replace the battery.
Unit will not start in AUTO with utility loss.	RED	Check the LED's / Screen for alarms.	OVERCRANK	Check fuel line shutoff valve is in the ON position. Clear alarm. Attempt to start the unit in MANUAL. If it does not start or starts and runs rough, contact servicing dealer.
Unit will not start in AUTO with utility loss.	RED	Check the LED's / Screen for alarms.	LOW VOLTS REMOVE LOAD	Clear alarm and remove household loads from the generator. Put back in AUTO and restart.
Unit will not start in AUTO with utility loss.	RED	Check the LED's / Screen for alarms.	FUSE PROBLEM	Check the 7.5 Amp fuse. If it is bad replace it with an ATO 7.5 Amp fuse, if not contact servicing dealer.
Unit will not start in AUTO with utility loss.	RED	Check the LED's / Screen for alarms.	OVERSPEED	Contact servicing dealer.
Unit will not start in AUTO with utility loss.	RED	Check the LED's / Screen for alarms.	UNDERVOLTAGE	Contact servicing dealer.
Unit will not start in AUTO with utility loss.	RED	Check the LED's / Screen for alarms.	UNDERSPEED	Contact servicing dealer.
Unit will not start in AUTO with utility loss.	RED	Check the LED's / Screen for alarms.	STEPPER OVERCURRENT	Contact servicing dealer.
Unit will not start in AUTO with utility loss.	RED	Check the LED's / Screen for alarms.	MISWIRE	Contact servicing dealer.
Unit will not start in AUTO with utility loss.	RED	Check the LED's / Screen for alarms.	OVERVOLTAGE	Contact servicing dealer.
Yellow LED illuminated in any state.	YELLOW	Check the screen for additional information.	LOW BATTERY	Clear alarm. Check the battery using the control panel under the MAIN menu using the BATTERY MENU option. If it states battery is GOOD contact servicing dealer. If it states CHECK BATTERY replace the battery.
Yellow LED illuminated in any state.	YELLOW	Check the screen for additional information.	BATTERY PROBLEM	Contact servicing dealer.
Yellow LED illuminated in any state.	YELLOW	Check the screen for additional information.	CHARGER WARNING	Contact servicing dealer
Yellow LED illuminated in any state.	YELLOW	Check the screen for additional information.	SERVICE A	Perform SERVICE A maintenance, hit ENTER to clear.
Yellow LED illuminated in any state.	YELLOW	Check the screen for additional information.	SERVICE B	Perform SERVICE B maintenance, hit ENTER to clear.
Yellow LED illuminated in any state.	YELLOW	Check the screen for additional information.	Inspect Battery	Inspect Battery, hit ENTER to clear.

Section 10 Accessories

There are performance enhancing accessories available for air-cooled generators.

Accessory	Description
Cold Weather Kit	Recommended in areas where temperatures regularly fall below 32 ºF (0 ºC).
Scheduled Maintenance Kit	Includes all pieces necessary to perform maintenance on the generator along with oil recommendations.
Auxiliary Transfer Switch Lockout	Enables any of the transfer switches to completely lock out one large electrical load by tying into its control system.
Fascia Skirt Wrap	Standard on all 20 kW units. It is available for all other current production air-cooled units. It snaps together, around the base of the generator, to provide a smoothing, contoured look as well as rodent / insect protection.
Mobile Link™	Provides a personalized web portal that displays the generator's status, maintenance schedule, event history and much more. This portal is accessible via computer, tablet or smart phone. Sends emails and/ or text notifications the moment there is any change in the generator's status. Notification settings can be customized to what type of alert is sent and how often. For more information visit www.standbystatus.com.
Touch-Up Paint Kit	Very important to maintain the look and integrity of the generator enclosure. This kit includes touch-up paint and instructions.

Contact a Dealer for additional information on accessories.

Notes

Section 12 Interconnection Diagram

12.1 INTERCONNECTION DRAWING 0K2516-B

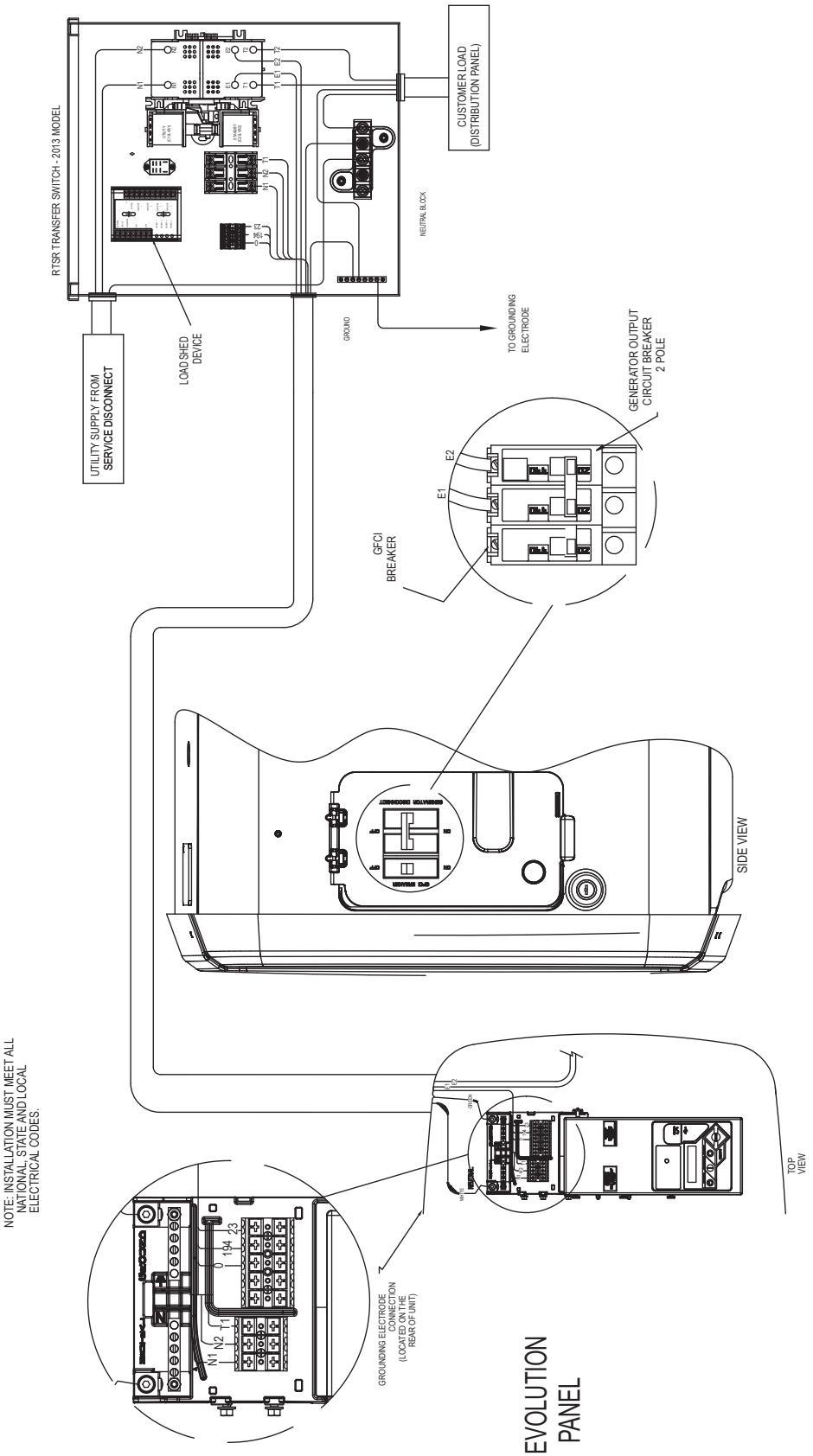

NOTE: INSTALLATION MUST MEET ALL
NATIONAL, STATE AND LOCAL
ELECTRICAL CODES.

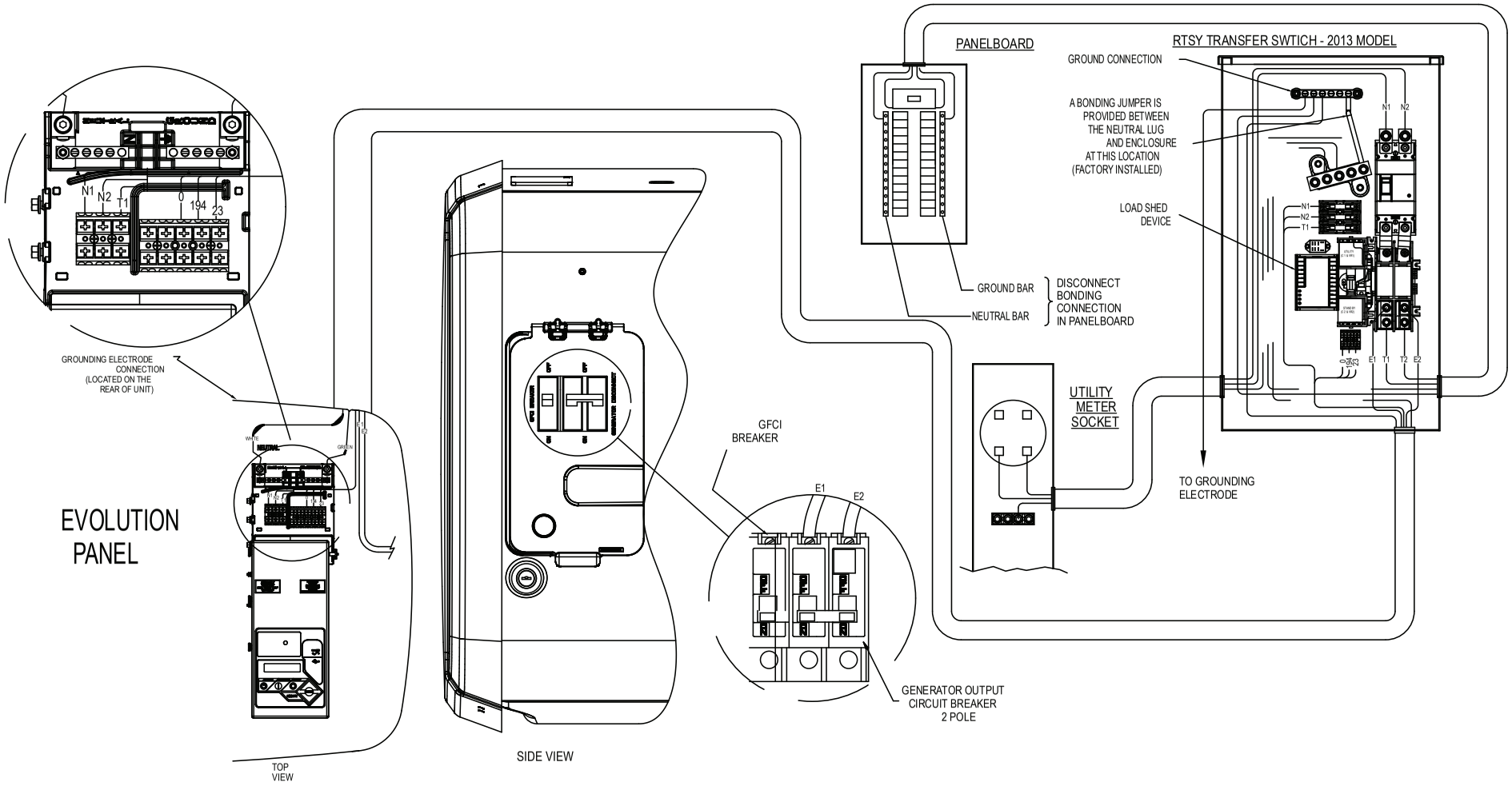

Section 13 Installation Diagram

13.1 INSTALLATION DRAWING 0J9945-D

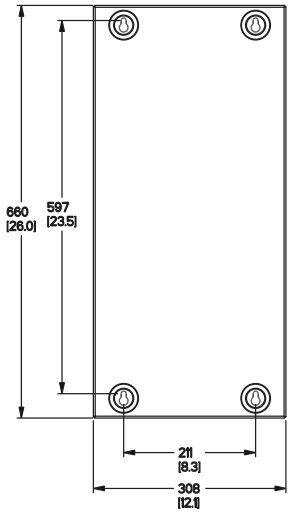

TRANSFER SWITCH
8KW - 17KW
(IF SUPPLIED)

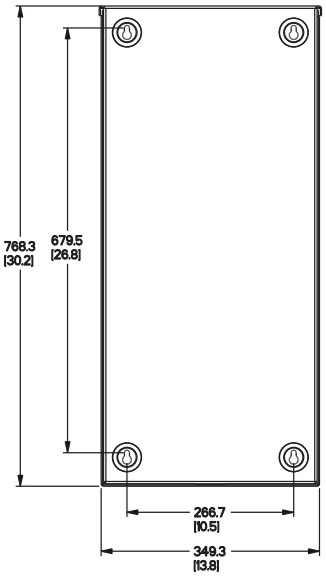

SERVICE ENTRANCE
TRANSFER SWITCH
(IF SUPPLIED)

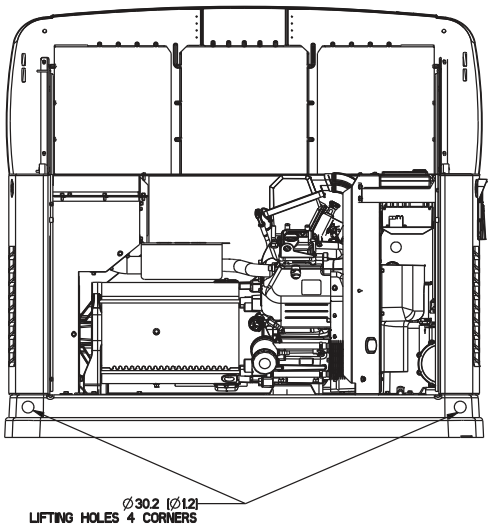

"DO NOT LIFT BY ROOF"

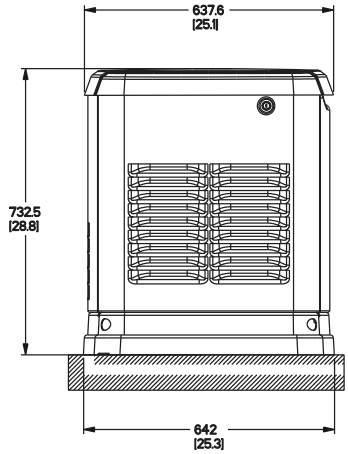

LEFT SIDE VIEW

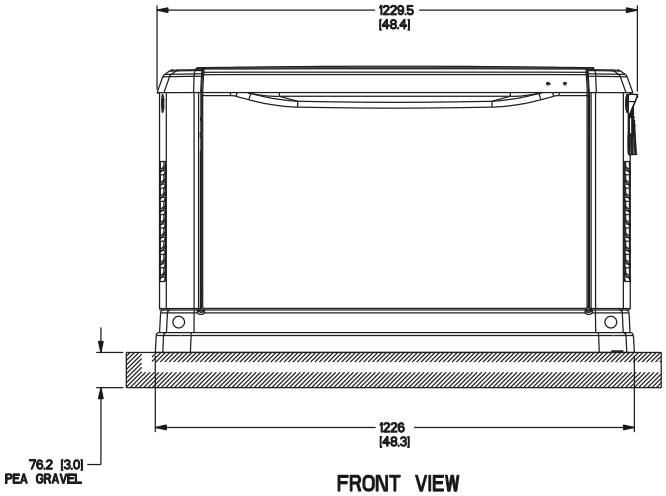

FRONT VIEW

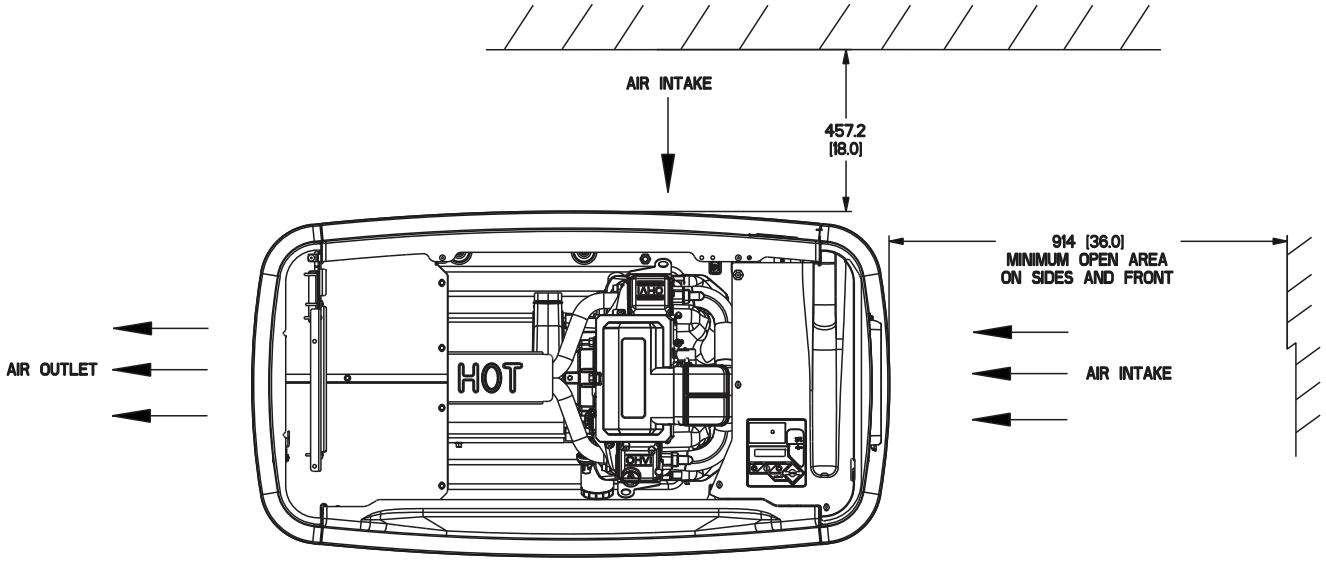

TOP VIEW

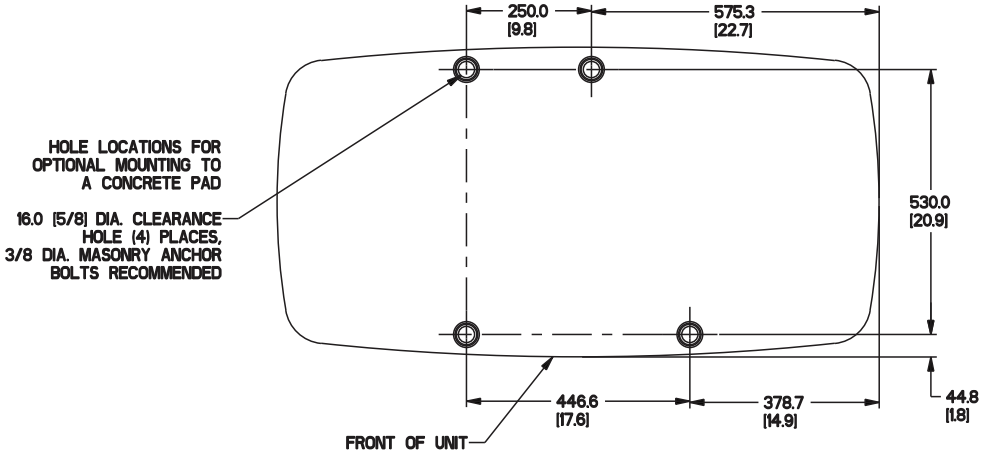

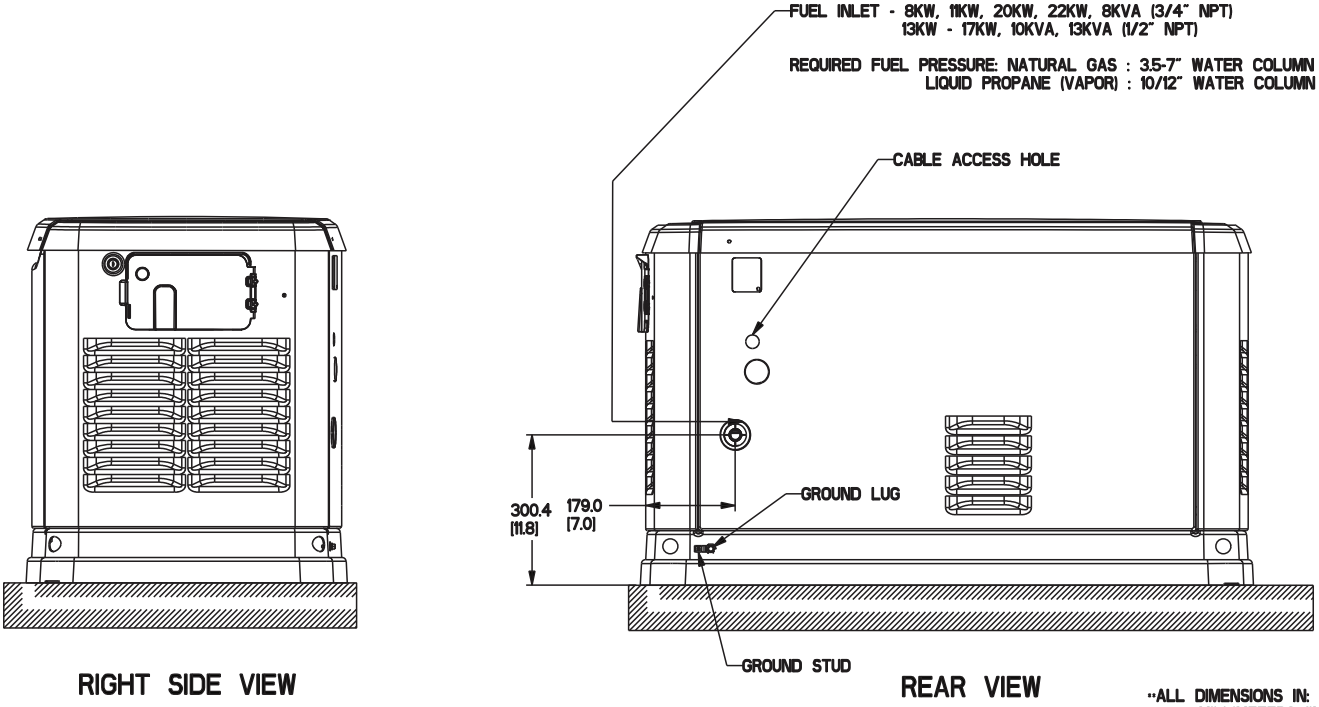

RIGHT SIDE VIEW

REAR VIEW

**ALL DIMENSIONS IN:
MILLIMETERS [INCHES]

© Generac Power Systems, Inc. All rights reserved
Specifications are subject to change without notice.
No reproduction allowed in any form without prior written consent from Generac Power Systems, Inc.
Internal Use Only – Not for Distribution

Generac Power Systems, Inc.
S45 W29290 Hwy. 59
Waukesha, WI 53189
1-888-GENERAC (1-888-436-3722)
generac.com

Part No. 0J9944 Revision K (10/08/14) Printed in U.S.A.