SH 1/1 | REV B | WINDCHILL VERSION B.2

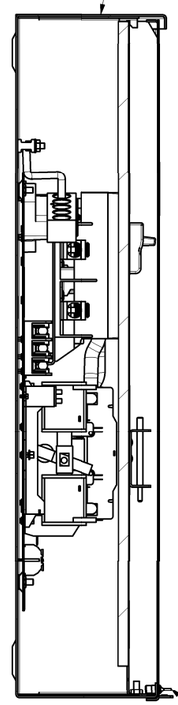

SECTION A-A

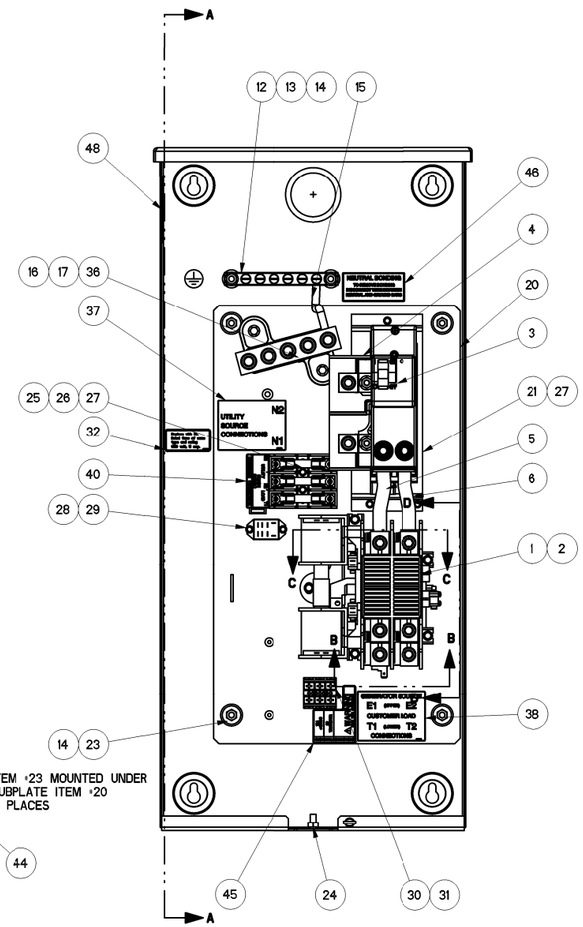

ITEM #23 MOUNTED UNDER SUBPLATE ITEM #20 4 PLACES

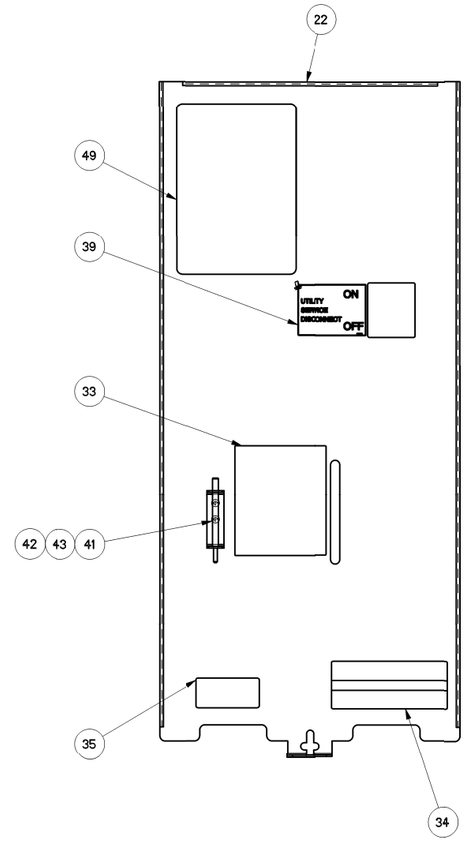

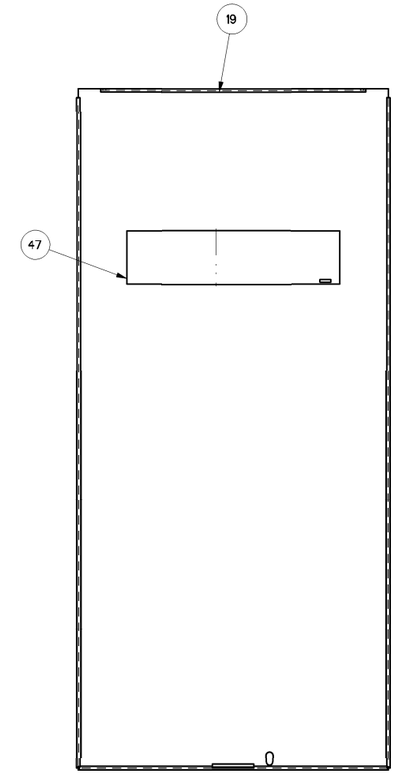

ITEM #	PART #	QTY	DESCRIPTION
1	0D9618	1	XFRSW HSB 200A 2P 250V
2	074908	5	SCREW HHTT M5-0.8 X 10 BP
3	0E7283	1	CB 0150A 2P 240V S QN2 LL
4	0E3664	1	BASE, QN CIRCUIT BREAKER
5	036918	2	SCREW PPHM #8-32 X 1/2
6	0G9299	2	WIRE 3/0 N1,N2
7	0E3375	6	LUG SLDLSS 250-#6 AL/CU
8	0F1252	6	SCREW BHSC 1/4-20 X 3/8
9	022097	6	WASHER LOCK M6-1/4
10	0E6033	4	90 DEGREE DN SPADE CONNECTOR
11	0E6034	1	STRAIGHT SPADE CONNECTOR
12	0J8202	1	LUG SLDLSS 2/0-#14X#10-32X.125
13	026850	2	WASHER LOCK EXT 1/4 STL
14	0G8411	6	NUT HEX FL WHIZ 1/4-20
15	0K1914	1	WIRE NEUTRAL CONNECTION SIE
16	0K0108A	1	ASSY-NEUT BLK 200A W/TAP
17	090388	2	SCREW HHTT M6-1.0 X 12 ZINC
18	0K0117OAL0R	1	ENCLOSURE 200A SE XFRSW RAW
19	0K0118OAL0R	1	COVER,200A SE XFRSW RAW
20	0K0119	1	SUBPLATE,200A SE XFER SW
21	0G93000AL0R	1	CB RISER BRACKET 200A GENERAC RAW
22	0G97730AL0R	1	COVER INSIDE 200A SE SIE RAW
23	022473	4	WASHER FLAT 1/4-M6 ZINC
24	085889	1	NUT HEX 1/4-20 SS
* 25	0D2572	1	FUSEBLOCK 30A 600V 3POS W/SQ
26	073590A	3	FUSE 5A X BUSS
27	0A1495	5	SCREW HHTT M4-0.7 X 10 BP
* 28	0K0103	1	RELAY PNL 12VDC DPDT 10A@240VA
29	0F2659	2	SCREW HHTT M3-0.5 X 6 BP
* 30	0D7393T	1	TERM BLOCK 3P UL 12-20AWG
31	0K0124	2	SCREW PHTT M3-0.5 X 25
32	0D3587	1	DECAL, FUSE REPLACEMENT
33	0E3484	1	DECAL WARN MANUAL OPER HANDLE
34	0G3259	1	DECAL TERMINAL SHOCK HZD BI
35	0G3274	1	DECAL LIVE CIRCUIT ENG/FRN/SPN
36	026902	1	SCREW HHTT #8-32 X 1/4 CZ
37	0H1765A	1	DECAL UTILITY SOURCE CONNECTION
38	0H1765B	1	DECAL GENERATOR/CUSTOMER CONN
39	0H1765C	1	DECAL UTILITY DISCONNECT
40	0H6389	1	DECAL UTILITY LOAD SENSE 240V
41	0D6162	2	RIVET POP .156 X .362 AL
42	0E6155	1	PIN ARM EXTENDER
43	0E6193	1	BRACKET, ARM EXTENDER
44	0E7213	1	SCREW THUMB 1/4-20 X1/2 W/SHLD
45	0J4908	1	DECAL CUSTOMER CONN RTS
46	0K1018	1	DECAL, NEUTRAL CONNECTION
47	0K1272	1	DECAL TRANSFER SW SIEMENS
48	0K1736B	1	DECAL,XFER SW SE 150A 120/240
49	0K1738	1	DECAL TEST SEQUENCE 100-200A SE
50	0K9467	1	LIMIT SWITCH SPST 16A
51	0K9468	2	SCREW PPH M3X15 SEMS
52	064761	4	TIE WRAP UL 5.6 X .10 NATL (NOT SHOWN)
53	0K9497	1	HARN 200A XFER SW SE (NOT SHOWN)

*-SUPPLIED WITH HARNESS ITEM #53

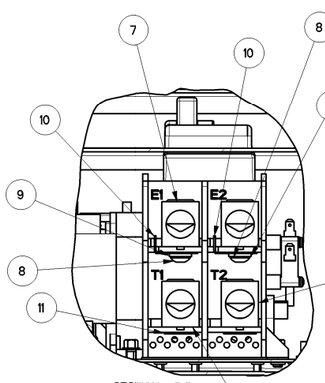

SECTION B-B
SCALE 0.600

TORQUE ITEM #8 TO 72 IN-LBS

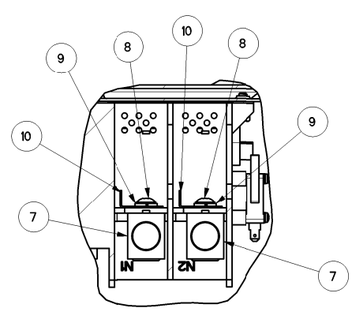

SECTION C-C
SCALE 0.600

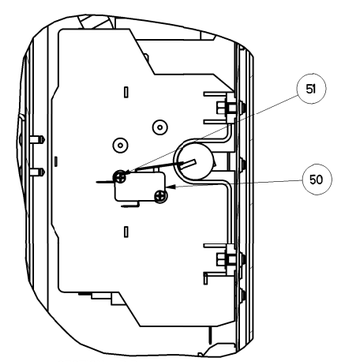

SECTION D-D
SCALE 0.600

PART NUMBER	DESCRIPTION
0K9485	ASSEMBLY 200A SERVICE ENTR SIEM
0K9485A	EXPLODED VIEW DRAWING

REFERENCE DRAWINGS

0K9492	SCHEMATIC/WIRING DIAGRAMS
0K1846	CARTON 30'5 X 14'2 X 7'8
0H7275	TEST PROC HSB XFRSW
0K0121	KIT, ENCL 200A SE AL SIEMENS

DRAWING CREATED FROM PRO/ENGINEER 3D FILE. ECO MODIFICATION TO BE APPLIED TO SOLID MODEL ONLY.

GENERAL TOLERANCES UNLESS NOTED
ALL XX : ± 0.4 MM
XXX : ± 0.4 MM
XXXX : ± 0.15 MM
ALL ANG ± 1°
INTERPRET DIM AND TOL PER ASME Y14.5M-1994
THIRD ANGLE PROJECTION

GENERAC

TITLE
ASSEMBLY 150A SERVICE ENTRANCE SIEMENS CB

GENERAC POWER SYSTEMS OWNS THE COPYRIGHT OF THIS DRAWING WHICH IS SUPPLIED IN CONFIDENCE AND MUST NOT BE REPRODUCED FOR ANY PURPOSE OTHER THAN FOR WHICH IT IS SUPPLIED WITHOUT THE EXPRESS WRITTEN CONSENT OF GENERAC POWER SYSTEMS. © GENERAC POWER SYSTEMS 2010

ELECTRONICALLY APPROVED INSIDE WINDCHILL

ISSUE DATE:

SIZE	CAGE NO	DWG NO	REV
D	N/A	0K9485$	B

SCALE 0.300 | WT-KG 548.567 | SHEET 1 of 1

GENERAL ASSEMBLY DRAWING