0K9491

SCHEMATIC — DIAGRAM

NOTE:
ALL CONTACTS SHOWN WITH TRANSFER SWITCH IN UTILITY POSITION.

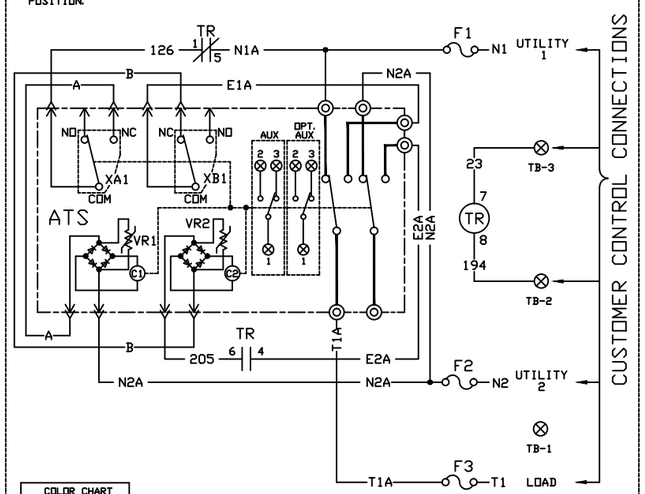

COLOR CHART	
WIRE	WIRE COLOR
23	WHITE
126	ORANGE
194	RED
205	VIOLET
A	BLACK
B	GRAY
E1A	BROWN
E2A	BROWN/WHITE
N1A	YELLOW
N2A	YELLOW/BLACK
T1A	BLUE

LEGEND	
ATS	TRANSFER SWITCH CONTACTOR
C1	SOLENOID COIL (UTILITY CLOSING)
C2	SOLENOID COIL (STANDBY CLOSING)
F1,F2,F3	FUSE, 5A
TB	TERMINAL STRIP (CUSTOMER CONNECTION)
TR	RELAY, TRANSFER
VR1,VR2	VARISTOR
XA1,XB1	LIMIT SWITCHES, ACTUATOR

WIRING — DIAGRAM

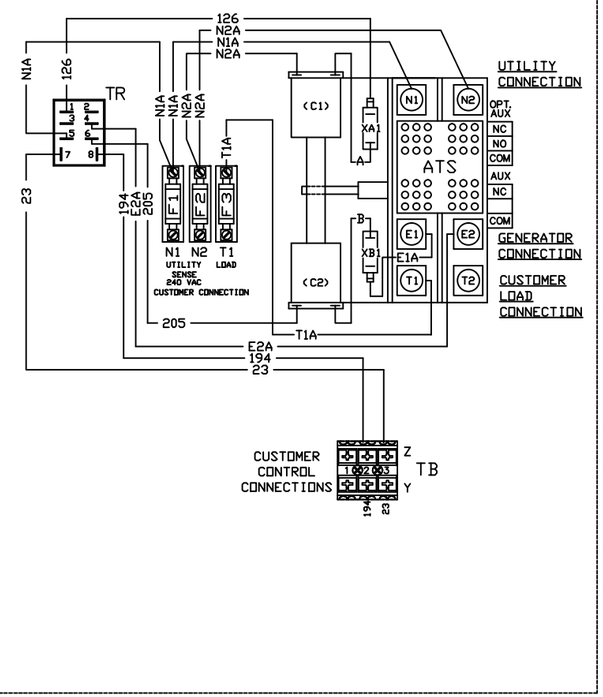

REV	DESCRIPTION
-A-	RELEASED FOR PRODUCTION
8/8/02 K-1840-B	REVISED AUX CONTACTS

DO NOT SCALE

SD/WD 100-200A XFER SW RTS 2014 NON-SE

N/A

GDV 10/29/14 N/A N/A

0K9491.DWG

1 = 1 RTS 2014

0K9491 B

GROUP G

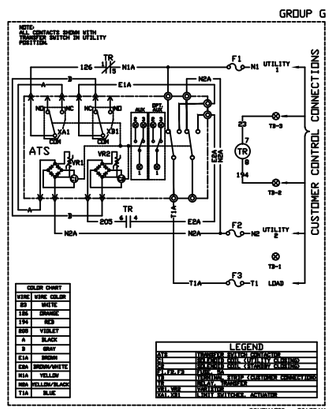

REVISION K-1840-B
DATE: 08/08/02

SCHEMATIC - DIAGRAM
RTS 2014 NON-SE
DRAWING # 0K9491

GROUP G

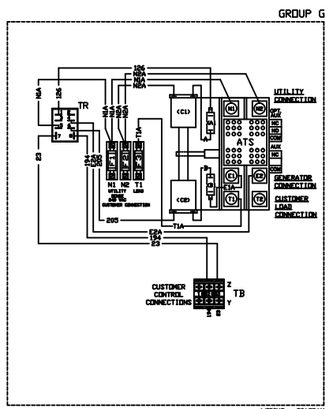

REVISION K-1840-B
DATE: 08/08/02

WIRING - DIAGRAM
RTS 2014 NON-SE
DRAWING # 0K9491