GROUP E

59	2, 5, 15, 16, 28, 35, 42, 58, 86
60	4, 5, 6
61	7, 42, 43, 44, 45, 46, 47, 48, 49, 50, 51, 52, 53, 54, 57, 58
62	42, 43, 44, 45, 46, 47, 48, 49, 50, 51, 52, 53, 54, 56, 57, 58
63	23, 24, 25

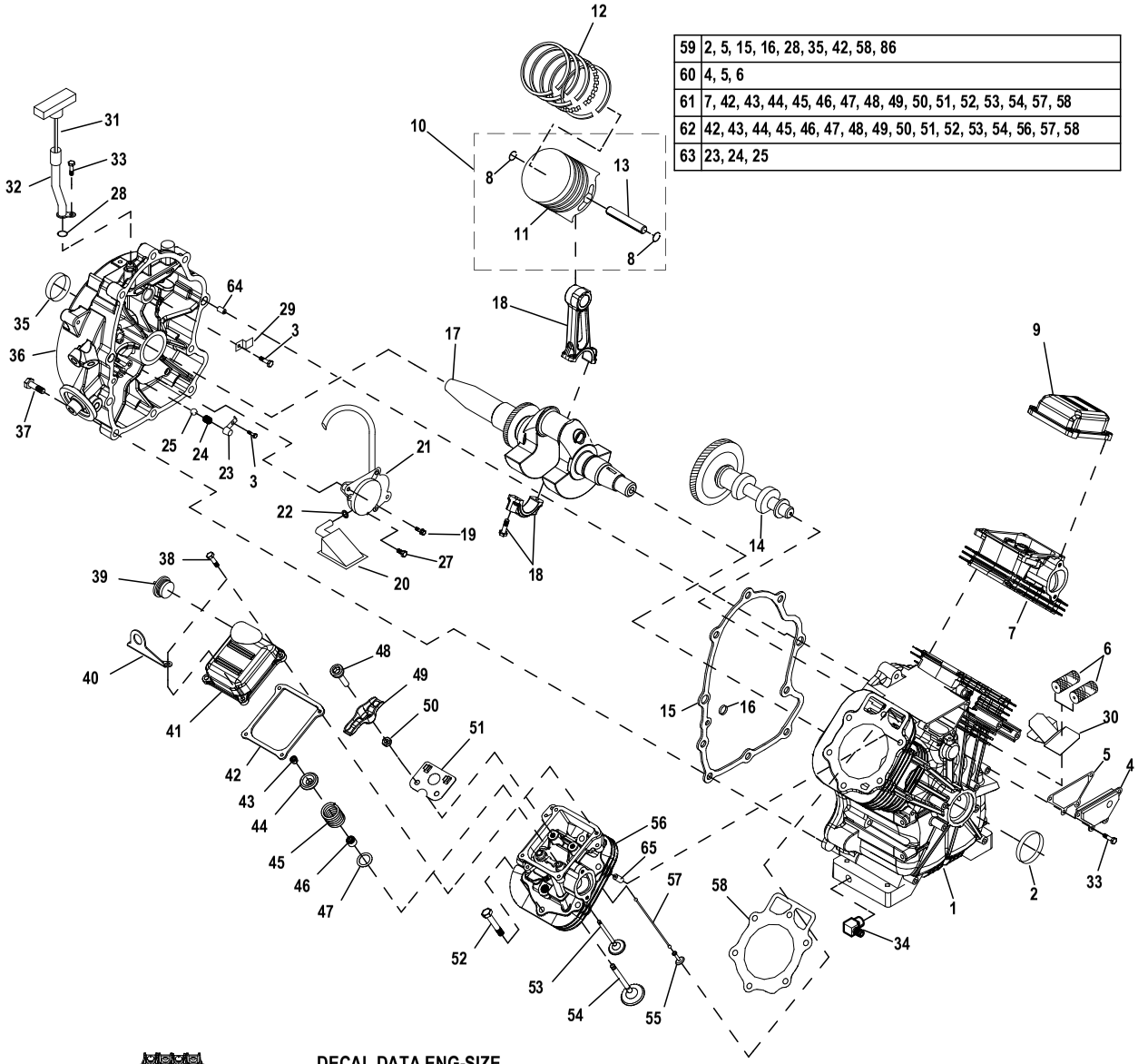

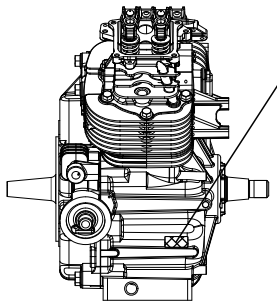

NOT SHOWN ON SERVICE EV		
P/N:	QTY:	DESC:
020527	*	DECAL DATA ENG-SIZE
010599	0.88gl	OIL D30D RUN-IN-OIL
0A2767	*	PIPE SEALANT LCITE 565

GROUP E

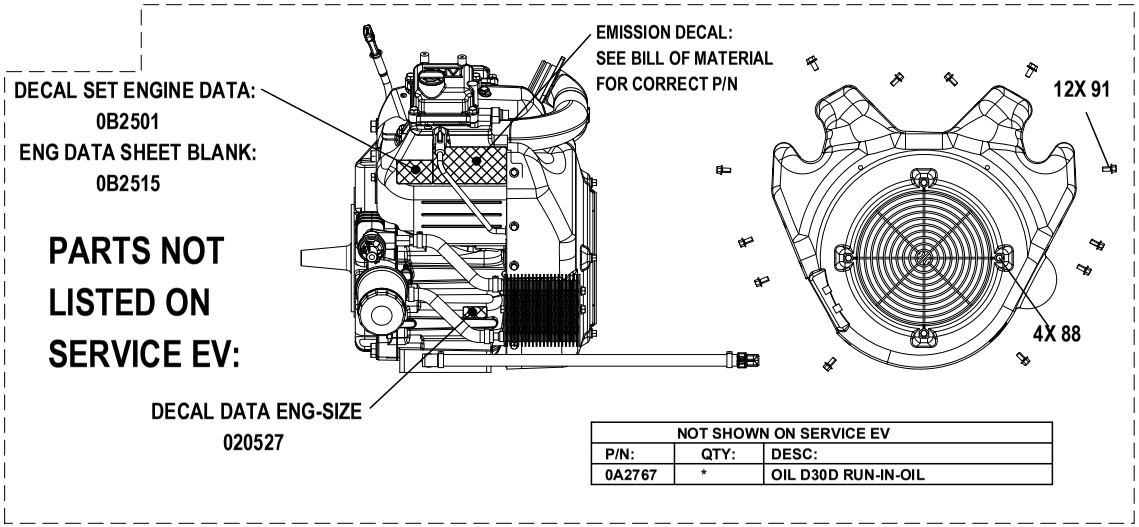

NOT SHOWN ON SERVICE EV		
P/N:	QTY:	DESC:
0A2767	*	OIL D30D RUN-IN-OIL

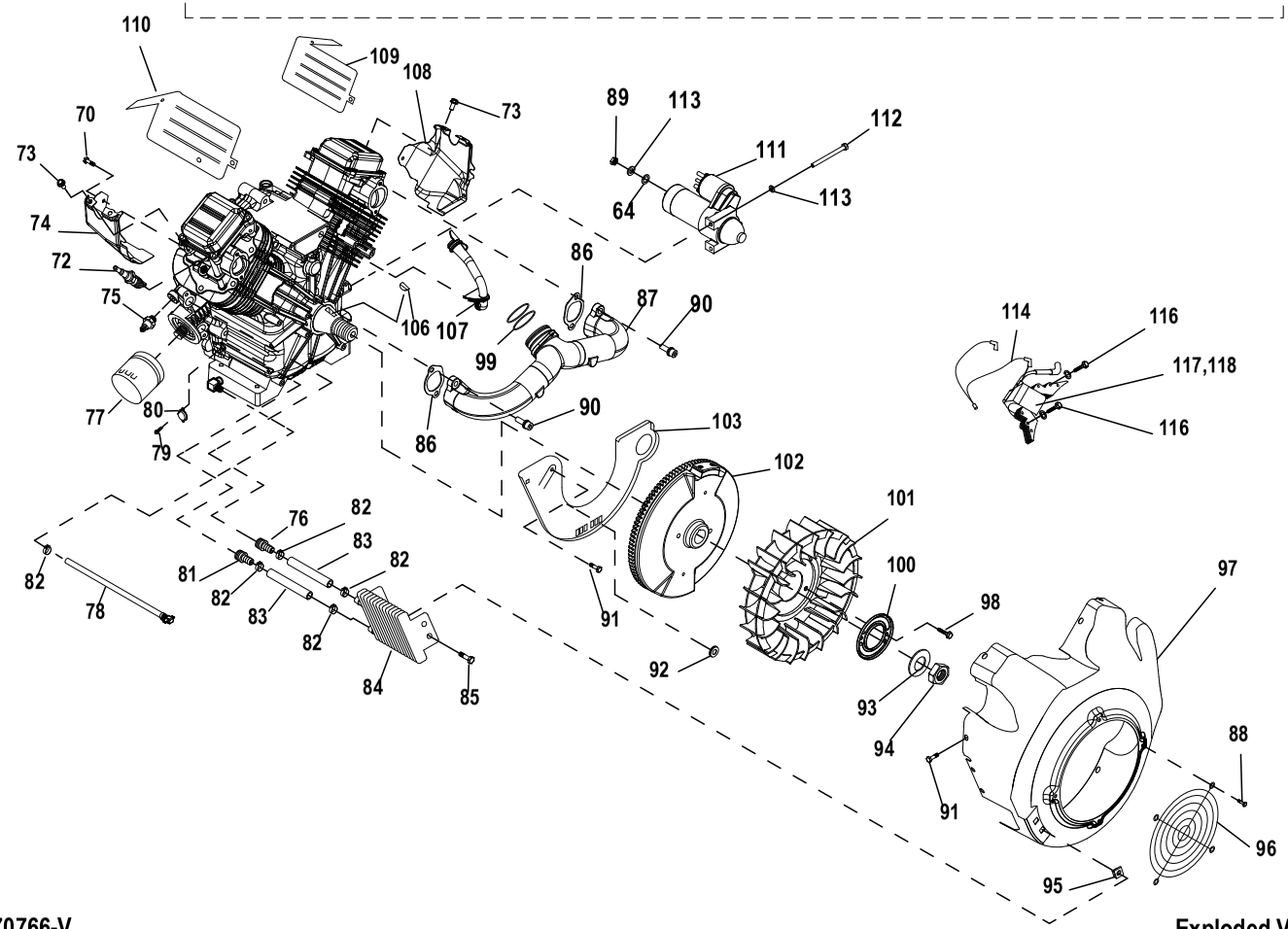

EXPLODED VIEW: EV ENGINE GTH990-999 HSB 2013

DRAWING #: 0J9882

GROUP E

ITEM	PART#	QTY.	DESCRIPTION
		PAGE 1	
1	10000038352	1	CRANKCASE ASSEMBLY W/PLUGS
2	0K1534	1	SEAL CRANKSHAFT FLYWHEEL RED
3	0G0919	3	SCREW HHFCS M6-1.0 X 12 G8.8
4	0G9100	1	ASSEMBLY, BREATHER DUAL VALVE
5	0C3005	1	GASKET, BREATHER COVER
6	0E3372C	2	SEPARATOR, OIL BREATHER
7	10000011471	1	ASSY HEAD CYL #1 GT-999 22KW
8	071983	4	RETAINER, PISTON PIN 20
9	10000008426	1	ROCKER COVER GT999 NO FILL PB MCHND
10	0K6418	2	ASSY PISTON FLAT TOP 90 DIA
11	0K6404	2	PISTON FLAT TOP 90 DIA
12	0G2565	2	RING SET, PISTON DIA 90
13	0K6397	2	WRIST PIN 999 20X12X49
14	10000015099	1	CAMSHAFT MACHINING 5.4 LIFT
	10000002227	1	CAMSHAFT MACHINING 6 LIFT
15	0C2977	1	GASKET, CRANK CASE
16	0C5943	1	SEAL, OIL PASSAGE
17	A0001393697	1	ASSY CRANKSHAFT HORIZ 990 DIRECT DRV GEN
18	0J8969	2	ASSY CONROD MACH GT990 (13,14,16,17KW)
	0J8968	2	ASSY CONROD MACH GT999 (20KW, SYNERGY)
	0K6410	2	ASSY CONROD GT999 HO (22KW)
19	0G6431	2	SCREW SHC SEMS M6-1.0 X 50 G8.8
20	0E6098	1	SCREEN, OIL PICKUP
21	10000047784	1	ASSY OIL PUMP SKYFALL W/O O-RING
22	0E8152	1	O-RING .49 ID X .07 THICK
23	0C3011	2	COVER, OIL RELIEF
24	0C3009	2	SPRING, OIL RELIEF
25	0C3010	2	BALL, 1/2D OIL RELIEF
27	0F5458	1	SCREW, PLASTITE HI-LOW #10
28	0C3027	1	O-RING, 3/8" X 1/2"
29	0C5998	1	CLAMP, OIL TUBE
30	0L6047	1	BREATHER DIVERTER GTH999
31	0H6859L	1	ASSEMBLY, DIPSTICK WITH HANDLE ORG
32	A0000303017	1	TUBE DIPSTICK GTH999 30 DEG
33	0D6147	5	SCREW HHFC M6-1.0 X 10mm
34	10000006153	1	BARB EL SAE 3/8NPT X 3/8 ST-Z
35	0K2035	1	SEAL CRANKSHAFT PTO RED
36	10000038341	1	GEARCOVER/ADAPTOR GTH-990
37	0C3006	10	SCREW, HHFC M10-1.5 X 55
38	080318	8	SCREW HHFC M6-1.0 X 25
39	093064A	1	ASSEMBLY, OIL FILL CAP ORG
40	10000029025	2	BRACKET LIFT
41	10000008497	1	ROCKER COVER GT999 W-FILL PB MCHND
42	A0002791673	2	GASKET ROCKER COVER 80MM X 91MM
43	086515	8	KEEPER, VALVE SPRING
44	0D2274	4	RETAINER, VALVE SPRING
45	0D3867	4	SPRING, VALVE
46	10000021593	2	VALVE STEM SEAL 6 X 12.7
47	0C5371	4	WASHER, VALVE SPRING
48	072694	4	STUD, ROCKER ARM PIVOT
49	A0002527982	4	ROCKER ARM RATIO 1.5:1 HLA
50	0D3998	4	NUT HEX M8-1.0 G8 YEL CHR
51	0J9679	2	PLATE, PUSH ROD GUIDE
52	0C2976	12	SCREW HHFC M8-1.25 X 65
53	086516	2	VALVE, EXHAUST
54	0C2229	2	VALVE, INTAKE
55	083897	4	TAPPET, SOLID
56	10000011472	1	ASSY HEAD CYL #2 GT-999 22KW
57	0D9853D	4	PUSHROD, 147
58	0C2978	2	GASKET, HEAD
	0K6409	1	GASKET, HEAD (22KW)
59	0D4010	1	KIT GASKET
60	0D4012	1	KIT BREATHER ASSEMBLY
61	0D8675A	1	KIT HEAD ASSEMBLY CYLINDER 1

EXPLODED VIEW: EV ENGINE GTH990-999 HSB 2013

DRAWING #: 0J9882

GROUP E

ITEM	PART#	QTY.	DESCRIPTION
62	0D8675B	1	KIT HEAD ASSEMBLY CYLINDER 2
63	0D4015	1	KIT OIL RELIEF
64	078699C	2	SLEEVE DOWEL PIN 14 DIA.
65	078699B	4	SLEEVE DOWEL PIN 12 DIA.
66	0C4166	1	SLEEVE PTO BEARING [NOT SHOWN]
		PAGE 2	
64	022145	1	WASHER FLAT M8 – 5/16
70	0G0919	2	SCREW M6-1.0 X 12
72	0E7585A	2	SPARKPLUG, RCY14 .040"GAP (13,14,16,17KW)
	0G0767A	2	SPARKPLUG, RC12 .040" GAP (20kW, 22kW, SYNERGY)
73	G074908	2	SCREW HHTT M5-0.8 X 10 BP
74	0G7606	1	WRAPPER, LOWER CYLINDER 2 ZINC
75	0L2917C	1	LOW OIL PRES SWITCH 10 PSI NC
76	0L6346	1	BARB STR SAE 1/4NPT X 3/8 EXT
77	070185E	1	OIL FILTER, 90mm
78	0H8131	1	ASSY, OIL DRAIN HOSE ORG
79	0F2094	2	SCREW PPHM M3-0.5 X 6 SEMS
80	094090	1	SWITCH, THERMAL 293F
81	0L6345	1	BARB STR SAE 1/4NPT X 3/8 ST-Z
82	0G3662B	5	CLAMP, HOSE OETIKER STEPLESS 18.5mm
83	0F0452C	2	HOSE 3/8" 300PSI 6" LG OIL
84	10000034627	1	OIL COOLER 300 BTU
85	0C9764	4	SCREW PLASTITE 1/4-15 X 3/4
86	0C3043	2	GASKET, MANIFOLD / PORT
87	0J9765	1	MANIFOLD INT GTH999 2X
88	045756	4	SCREW, HHTT M6-1 x 10 LONG
89	082025	1	NUT, HEX LOCK M5-0.8 ZINC
90	0G3730A	4	SCREW SHC M8 – 1.25 X 30 SEMS
91	090388	16	SCREW TAPTITE M6–1X12 CLEAR ZINC
92	022717A	1	GROMMET 3/8 X 1/16 X 1/4
93	0C3033	1	WASHER, 25MM I.D.
94	0C3034	1	NUT, HEX M24
95	0C9763	4	NUT, GROMMET 1/4 PLUG
96	0D1131	1	GUARD, FAN
97	0F1169K	1	HOUSING, BLOWER NG COOLER
98	0H4957	2	SCREW HHFCS M8 – 1.25 X 10 G8.8
99	0K0710	2	O-RING 1-3/4 X 1/16
100	0C3032	1	PLATE, FAN
101	0C3031	1	FAN, NYLON
102	A0000513162	1	FLYWHEEL ASSY WITH GEAR 255MM 36 DEG 4MM KEY (13,14,16,17kW)
	A0000513160	1	FLYWHEEL ASSY WITH GEAR 255MM 33 DEG 4MM KEY (20kW, 22kW, SYNERGY)
103	0G4928C	1	PLATE, BACKING WITH CUT OUT
106	082774	1	KEY, WOODRUFF 4 X 19D
107	0K3134	1	HOSE BREATHER
108	0G7604	1	WRAPPER, LOWER CYLINDER 1 ZINC
109	0G7603	1	WRAPPER, UPPER CYLINDER 1 ZINC
110	0G7605	1	WRAPPER, UPPER CYLINDER 2 ZINC
111	A0000501971	1	STARTER MOTOR GEAR REDUCED 1KW
112	061906	2	SCREW HHC M8 – 1.25 X 85 G8.8
113	022129	3	WASHER LOCK M8 – 5/16
114	0K1280	1	ASSEMBLY, GROUND WIRE
116	0G3110	4	SCREW TAPTITE M6 – 1.0 X 20 ZINC
117	0G3224TA	1	ASSY, IGN COIL W/DIODE, CYLINDER 1
118	0G3224TB	1	ASSY, IGN COIL W/DIODE, CYLINDER 2
119	082025	1	NUT HEX LOCK M5X 0.8