GENERAC®

Owner's Manual

For

Stationary Industrial Generators

Gas or Diesel

DANGER

Asphyxiation. Running engines produce carbon monoxide, a colorless, odorless, poisonous gas. Carbon monoxide, if not avoided, will result in death or serious injury.

(000103)

WARNING

Equipment damage. Only qualified service personnel may install, operate, and maintain this equipment. Failure to follow proper installation requirements could result in death, serious injury, and equipment or property damage.

(000182a)

SAVE THIS MANUAL FOR FUTURE REFERENCE

⚠WARNING

CANCER AND REPRODUCTIVE HARM

www.P65Warnings.ca.gov.

(000393a)

⚠WARNING

Breathing diesel engine exhaust exposes you to chemicals known to the State of California to cause cancer and birth defects or other reproductive harm.

- Always start and operate the engine in a well-ventilated area.
- If in an enclosed area, vent the exhaust to the outside.
- Do not modify or tamper with the exhaust system.
- Do not idle the engine except as necessary.

For more information go to www.P65Warnings.ca.gov/diesel. (000394)

Table of Contents

Section 1 Introduction and Safety

Introduction 1
Read This Manual Thoroughly 1
Installation, Operation, and Maintenance 1
How to Obtain Service 1
Safety Rules 2
General Hazards 2
Electrical Hazards 3
Fire and Explosion Hazards 4
Battery Hazards 4
Standards Index 5

Section 2 General Information

Unit Identification 7
Data Label 7
Model Identification Code 7
Voltage Code 8
Fuel Type 8
Engine RPM 8
Controller Type 8
Equipment Description 9
Standard Generator Features 9
Generator and Load Compatibility 9
Single-Phase “A” or “M” Code Units 9
Three-Phase Load Imbalance Limits 9
Ambient Condition Derate 9
Engine and Generator Protective Devices (If Equipped) 9
Coolant Temperature Sensor 9
Low Coolant Level Sensor 10
Oil Pressure Sensor 10
Oil Temperature Sensor (If Equipped) 10
Overspeed Shutdown 10
Overcrank Shutdown 10
RPM Sensor Loss Shutdown 10
Low Fuel Pressure Warning 10
DC Fuses 10
Fuel System 10
Diesel Fuel System 10
Natural Gas Fuel System 10
Bi-fuel Fuel System 10
LP Fuel System 10
LP Vapor Withdrawal Fuel System 11
LP Liquid Withdrawal Fuel System 11
Dual Fuel: NG/LP Fuel System 11
Specifications 11
Generator 11
Engine Oil Recommendations 11
Coolant 11
Gearbox Lubrication (If Equipped) 11
Starting Aids (If Equipped) 12
Engine Coolant Heater 12
Engine Oil Sump Heater 12
Battery Warmer 12
Glow Plugs / Intake Air Heater 12

Section 3 Operation

Generator Control and Operation 13
Grounding the Generator 13
Generator AC Neutral Connections 13
Initial Startup 13
Control Panel Interface 14
Emergency Stop Button 15
Common Alarm Horn 15
Key Switch 15
Fuse Block 15
Additional Components 15
Main Line Circuit Breaker (MLCB) 15
Automatic Transfer Switch 15
Automatic Battery Charger 15
Alarm Response Procedures 16
Warnings 16
Non-Shutdown Alarms 16
Shutdown Alarms 16
Alarm Display Window 16
General Fault Response Procedure 16
Operating the Unit with an Automatic Transfer Switch 16

Operating the Unit with a Manual Transfer Switch 17
Manual Engine Startup and Transfer 17
Re-Transfer and Shutdown 18
Shutting Generator Down While Under Load 18

Section 4 Maintenance

Maintenance 19
Service Maintenance Intervals 19
Maintenance Schedule 19
Notes and Maintenance Item Explanations .. 20
Disabling a Generator for Maintenance 20
To Disable the Generator From Starting 20
Shutdown and Restart an Operating Generator 20
Maintenance Tasks 21
Visually Inspect Unit 21
Check Engine Fluids 21
Check Engine Oil Level 21
Check Coolant Level 22
Check/Change Gearbox Oil (If Equipped) 22
Battery Inspection 23
Battery Installation and Replacement 23
Preliminary Instructions 23
12 VDC System 23
24 VDC System 24
Final Instructions 24
Other Maintenance Checks 24
Maintenance and Repair Parts 24
Extended Run-Time Maintenance Checks 25
Maintenance Level 1A 26
Maintenance Level 1 - Monthly or Every 24 Hours 27
Maintenance Level 2 - Semi-Annual or Every 125 Hours 28
Maintenance Level 3 - Annual or Every 250 Hours 29
Maintenance Level 4 - Bi-Annual or Every 500 Hours 30

Section 5 Warranty Information

For Stationary Emergency Spark-Ignited Generators 31
For Stationary Emergency Compression-Ignition Generators 33

Section 1 Introduction and Safety

Introduction

Thank you for purchasing a Generac Power Systems, Inc. product. This unit has been designed to provide high-performance, efficient operation, and years of use when maintained properly.

The information in this manual is accurate based on products produced at the time of publication. The manufacturer reserves the right to make technical updates, corrections, and product revisions at any time without notice.

Read This Manual Thoroughly

WARNING

Consult Manual. Read and understand manual completely before using product. Failure to completely understand manual and product could result in death or serious injury. (000100a)

If any section of the manual is not understood, contact your nearest Independent Authorized Service Dealer (IASD), or contact Generac Customer Service at 1-888-GENERAC (1-888-436-3722), or ***www.generac.com*** with any questions or concerns. The owner is responsible for proper maintenance and safe use of the equipment.

Save these instructions for future reference. This manual contains important instructions for the generator that should be followed during installation, operation and maintenance of the generator and batteries. Always supply this manual to any individual that will use this machine.

Installation, Operation, and Maintenance

Installation and initial startup of this equipment is not a “do-it-yourself” project. This generator set must be installed by an IASD or other competent, qualified contractor. The initial startup must be performed and documented by an IASD. An IASD can also provide the necessary training for authorized operators. It is the operator’s responsibility to perform all safety checks, to make sure that all maintenance for safe operation is performed promptly, and to have the equipment checked periodically by an IASD.

Access to the generator shall be through the use of a special tool, or lock and key, or other means of security and shall be controlled by the authority responsible for the location.

Normal maintenance service and replacement of parts are the responsibility of the owner and, as such, are not considered defects in materials or workmanship within the terms of the warranty. Individual operating habits and usage contribute to the need for maintenance service.

Proper maintenance and care of the generator will ensure a minimum number of problems and keep operating expenses at a minimum. See an IASD for service aids and accessories.

How to Obtain Service

NOTE: Use this page to record important information about the generator set. This label is typically located on the side of the control panel.

Each generator set has a data label containing important information about the unit.

When contacting an IASD about parts or service, always supply the complete model number and serial number of the unit as given on the data label. For quick and easy reference, copy the information printed on the data label located on the generator onto the sample label printed here. See ***Figure 1-1***.

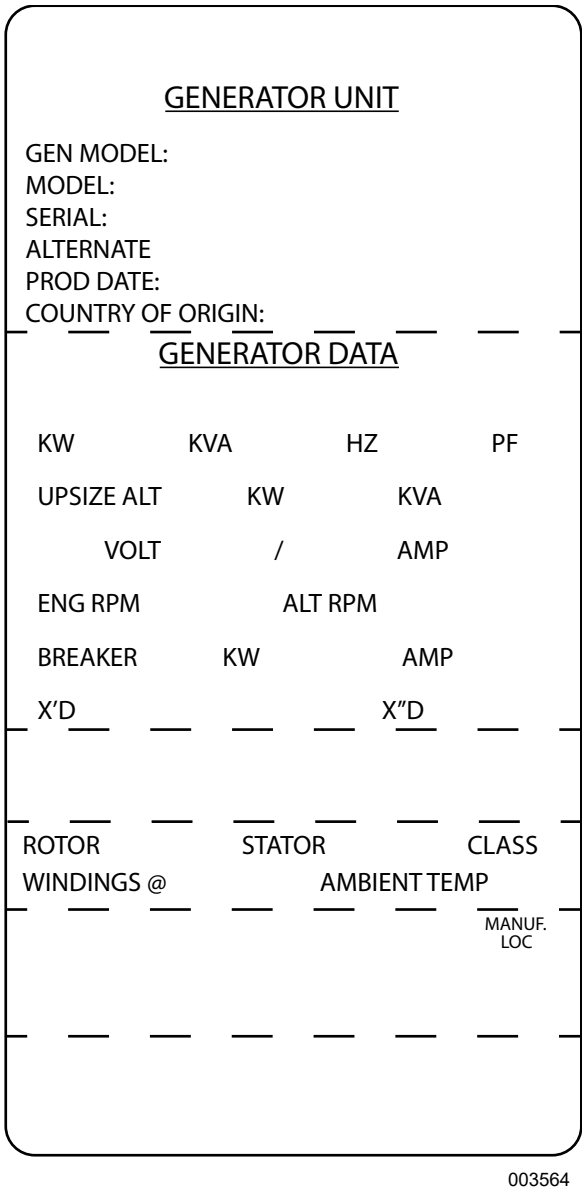

Figure 1-1. Data Label (Sample)

Safety Rules

The manufacturer cannot anticipate every possible circumstance that might involve a hazard. The warnings in this manual, and on tags and decals affixed to the unit are, therefore, not all inclusive. If using a procedure, work method or operating technique that the manufacturer does not specifically recommend, verify that it is safe for others. Also make sure the procedure, work method or operating technique utilized does not render the equipment unsafe.

Throughout this publication, and on tags and decals affixed to the unit, DANGER, WARNING, CAUTION and NOTE blocks are used to alert personnel to special instructions about a particular operation that may be hazardous if performed incorrectly or carelessly. Observe them carefully. Their definitions are as follows:

⚠DANGER

Indicates a hazardous situation which, if not avoided, will result in death or serious injury.

(000001)

⚠WARNING

Indicates a hazardous situation which, if not avoided, could result in death or serious injury.

(000002)

⚠CAUTION

Indicates a hazardous situation which, if not avoided, could result in minor or moderate injury.

(000003)

NOTE: Notes contain additional information important to a procedure and will be found within the regular text of this manual.

These safety warnings cannot eliminate the hazards that they indicate. Common sense and strict compliance with the special instructions while performing the action or service are essential to preventing accidents.

General Hazards

⚠DANGER

Asphyxiation. Running engines produce carbon monoxide, a colorless, odorless, poisonous gas. Carbon monoxide, if not avoided, will result in death or serious injury.

(000103)

⚠DANGER

Loss of life. Property damage. Installation must always comply with applicable codes, standards, laws and regulations. Failure to do so will result in death or serious injury.

(000190)

⚠WARNING

Moving Parts. Keep clothing, hair, and appendages away from moving parts. Failure to do so could result in death or serious injury.

(000111)

⚠WARNING

Moving Parts. Do not wear jewelry when starting or operating this product. Wearing jewelry while starting or operating this product could result in death or serious injury.

(000115)

⚠WARNING

Sudden start-up. Always set the safety disconnect switch to MANUAL before working on equipment. Failure to do so could result in death or serious injury.

(000194)

⚠WARNING

Personal injury. Do not insert any object through the air cooling slots. Generator can start at any time and could result in death, serious injury, and unit damage.

(000142a)

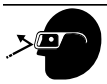

⚠WARNING

Vision Loss. Eye goggles are required to be worn when using this machine. Failure to wear eye goggles could result in permanent vision loss.

(000101)

⚠WARNING

Loss of life. This product is not intended to be used in a critical life support application. Failure to adhere to this warning could result in death or serious injury.

(000209b)

WARNING

Hearing Loss. Hearing protection is recommended when using this machine. Failure to wear hearing protection could result in permanant hearing loss. (000107)

WARNING

Equipment damage. Only qualified service personnel may install, operate, and maintain this equipment. Failure to follow proper installation requirements could result in death, serious injury, and equipment or property damage. (000182a)

CAUTION

Equipment or property damage. Do not block air intake or restrict proper air flow. Doing so could result in unsafe operation or damage to unit. (000229)

Electrical Hazards

DANGER

Electrocution. In the event of electrical accident, immediately shut power OFF. Use non-conductive implements to free victim from live conductor. Apply first aid and get medical help. Failure to do so will result in death or serious injury. (000145)

DANGER

Electrocution. Water contact with a power source, if not avoided, will result in death or serious injury. (000104)

DANGER

Electrocution. Contact with bare wires, terminals, and connections while generator is running will result in death or serious injury. (000144)

DANGER

Electrocution. Verify electrical system is properly grounded before applying power. Failure to do so will result in death or serious injury. (000152)

DANGER

Electrocution. Turn utility supply OFF before working on utility connections of the transfer switch. Failure to do so will result in death or serious injury. (000123)

DANGER

Electrocution. Never connect this unit to the electrical system of any building unless a licensed electrician has installed an approved transfer switch. Failure to do so will result in death or serious injury. (000150)

Fire and Explosion Hazards

DANGER

Explosion and Fire. Fuel and vapors are extremely flammable and explosive. Add fuel in a well ventilated area. Keep fire and spark away. Failure to do so will result in death or serious injury. (000105)

WARNING

Risk of Fire. Hot surfaces could ignite combustibles, resulting in fire. Fire could result in death or serious injury.

(000110)

WARNING

Risk of Fire. Unit must be positioned in a manner that prevents combustible material accumulation underneath. Failure to do so could result in death or serious injury. (000147)

WARNING

Hot Surfaces. When operating machine, do not touch hot surfaces. Keep machine away from combustibles during use. Hot surfaces could result in severe burns or fire. (000108)

Battery Hazards

DANGER

Electrocution. Do not wear jewelry while working on this equipment. Doing so will result in death or serious injury.

(000188)

WARNING

Explosion. Batteries emit explosive gases while charging. Keep fire and spark away. Wear protective gear when working with batteries. Failure to do so could result in death or serious injury.

(000137a)

WARNING

Explosion. Batteries emit explosive gases. Always disconnect negative battery cable first to avoid spark. Failure to do so could result in death or serious injury. (000238)

WARNING

Explosion. Do not dispose of batteries in a fire. Batteries are explosive. Electrolyte solution can cause burns and blindness. If electrolyte contacts skin or eyes, flush with water and seek immediate medical attention.

(000162)

WARNING

Risk of burn. Do not open or mutilate batteries. Batteries contain electrolyte solution which can cause burns and blindness. If electrolyte contacts skin or eyes, flush with water and seek immediate medical attention. (000163a)

WARNING

Environmental Hazard. Always recycle batteries at an official recycling center in accordance with all local laws and regulations. Failure to do so could result in environmental damage, death, or serious injury. (000228)

Always recycle batteries in accordance with local laws and regulations. Contact your local solid waste collection site or recycling facility to obtain information on local recycling processes. For more information on battery recycling, visit the Battery Council International website at: ***http://batterycouncil.org***

Standards Index

The generator owner must strictly comply with all applicable national, state, or local laws, codes, and regulations pertaining to the installation of engine-generator power systems. Always use the current acceptable version or edition of the applicable code or standard which applies to the local jurisdiction. In the absence of pertinent local laws and standards, the following published booklets may be used as a guide:

National Fire Protection Association (NFPA) 70: The National Electric Code (NEC)*

1. NFPA10: Standard for Portable Fire Extinguishers*
2. NFPA 30: Flammable and Combustible Liquids Code*
3. NFPA 37: Standard for Stationary Combustion Engines and Gas Turbines*
4. NFPA 54: National Fuel Gas Code*
5. NFPA 58: Standard for Storage and Handling of Liquefied Petroleum Gases*
6. NFPA 68: Standard on Explosion Protection by Deflagration Venting*
7. NFPA 70E: Standard for Electrical Safety in the Workplace*
8. NFPA 99: Health Care Facilities Code*
9. NFPA 101: Life Safety Code*
10. NFPA 110: Standard for non-emergency and Standby Power Systems*
11. NFPA 211: Standard for Chimneys, Fireplaces, Vents, and Solid Fuel Burning Appliances*
12. NFPA 220: Standard on Types of Building Construction*
13. NFPA 5000: Building Code*
14. International Building Code**
15. Agricultural Wiring Handbook***
16. ASAE EP-364.2 Installation and Maintenance of Farm Standby Electric Power****

This list is not all inclusive. Check with the Authority Having Local Jurisdiction (AHJ) for any local codes or standards which may be applicable to the jurisdiction where the generator is installed. The above listed standards are available from the following Internet sources:

* *www.nfpa.org*

** *www.iccsafe.org*

*** *www.rerc.org* Rural Electricity Resource Council; P.O. Box 309; Wilmington, OH 45177-0309

**** *www.asabe.org* American Society of Agricultural & Biological Engineers; 2950 Niles Road; St. Joseph, MI 49085

This page intentionally left blank.

Section 2 General Information

Unit Identification

Data Label

Each generator set has a data label containing important information about the generator. The data label lists the unit serial number, rated voltage, amps, wattage capacity, etc.

NOTE: The figure below is a generic representation only. For actual information on your particular model, refer to the data label(s) affixed to your unit.

Model Identification Code

The model identification code gives important information about the generator set. For example, if the code is:

SG 0100 A G03 6.8 N 23 H B Y Y 3

Then the generator would have the attributes shown in bold below:

S	Standby	
	M	Modular (MPS)
	P	Prime
	W	Prime Modular (MPS)
	C	Continuous
	Z	Protector Series
G	Gaseous engine	
	D	Diesel engine
	B	Bi-Fuel.
0100	kW rating (100kW)	
A	Voltage code (see ***Voltage Code***)	
G03	Engine designation (for internal use)	
6.8	Engine size (6.8 = 6.8L, 142 = 14.2L)	
N	Fuel type (see ***Fuel Type***)	
23	Engine RPM (see ***Engine RPM***)	
H	Control Panel (see ***Controller Type***)	
B	Brushless excitation	
	P	Permanent magnet (external) excitation
	D	Direct excitation
Y	Standard enclosure (weather protective)	
	N	No enclosure, standard — suitable for indoor installation
	S	Level 1 sound attenuated
	L	Level 2 sound attenuated
	E	Level 3 sound attenuated
	C	Containerized
Y	Exhaust muffler mounted	
	N	Exhaust muffler not provided
	L	Exhaust muffler shipped loose with unit
3	Emission designation (for internal use)	

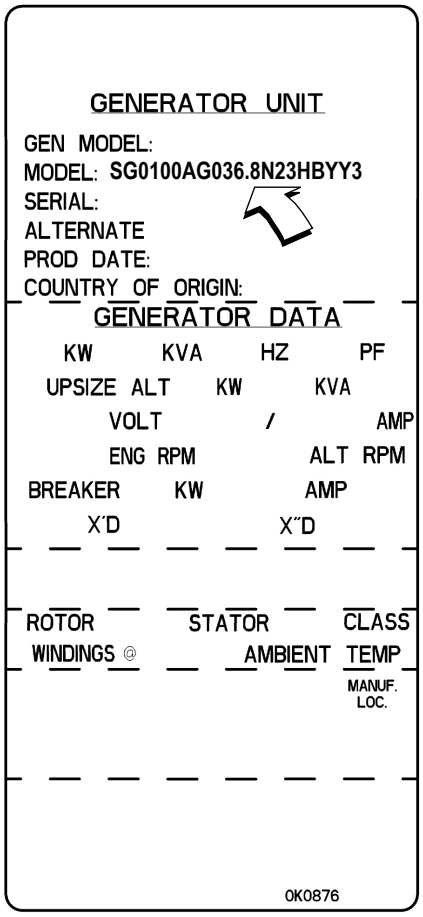

Sample

Voltage Code

Voltages	Code	Description
60 Hz	**A**	120/240 VAC, single-phase, three-lead
	D	120/240 VAC, single- or three-phase, 12-lead (Full capacity single- or three-phase; cannot be reconnected for 277/480 VAC)
	G	120/208 VAC, three-phase, 12-lead
	H	231/400 VAC, three-phase, 12-lead (Adjustable from 380 VAC to 416 VAC)
	J	120/240 VAC, three-phase, 12-lead
	K	277/480 VAC, three-phase, 12-lead
	L	346/600 VAC, three-phase, three-lead
50 Hz	**M**	110/220 VAC, single-phase, three-lead (Adjustable to 120/240 VAC)
	N	115/200 VAC, single-phase, 12-lead
	P	100/200 VAC, three-phase, 12-lead (Adjustable to 240 VAC)
	R	231/400 VAC, three-phase, 12-lead (Adjustable from 380 VAC to 416 VAC)
	S	480 VAC, three-phase, three-lead

Fuel Type

Code	Description
B	Bi-Fuel Diesel and Natural Gas
D	Diesel
G	Gasoline
N	Natural Gas (11-14” WC)
S	Natural Gas Low Pressure (7-11” WC)
V	Liquid Propane Vapor Withdraw (LPV)
L	Liquid Propane Withdraw (LPL)
P	Dual Fuel NG (Normal) / LPL Secondary
R	Dual Fuel NG (Normal) / LPV Secondary
Q	Dual Fuel NG (Low Pressure) / LPL Secondary
T	Dual Fuel NG (Low Pressure) / LPV Secondary

Engine RPM

Example	Description
15	1500 RPM
18	1800 RPM
23	2300 RPM
30	3000 RPM
36	3600 RPM

NOTE: Engines operating above 1,500 or 1,800 RPM use a gearbox to reduce the engine RPM to the desired alternator rotor RPM of 1,500 RPM (50 Hz operation) or 1,800 RPM (60 Hz operation).

Controller Type

Code	Description
A	ComAp
G	G-Panel
H	H-Panel
P	Power Zone Pro Sync
S	Power Zone Pro

Equipment Description

This equipment is a revolving field, alternating current type generator set. The generator is designed to supply electrical power for the operation of compatible electrical loads when the utility power supply is not available or has dropped to an unacceptable level.

The generator's revolving field is directly connected to and driven by an engine by means of flexible discs or a gearbox. Generators with a four-pole rotor are driven at a rated speed of 1,800 RPM to supply a frequency of 60 Hertz. Four-pole rotors operating at 50 Hertz are driven at 1,500 RPM.

Refer to the data label affixed to the unit for rated AC voltage, wattage, amperage, number of phases, etc. See ***Model Identification Code*** for an explanation of how to identify the unit's features.

Standard Generator Features

The generator incorporates the following features:

- The rotor insulation system is Class "H" rated, and the stator insulation is Class "H" rated as defined by NEMA MG1-22.4 and NEMA MG1-1.65.
- The generator is self-ventilated and drip-proof constructed.
- The voltage waveform deviation, total harmonic content of the AC waveform and "telephone influence factor" have been evaluated and are acceptable according to NEMA MG1-22.
- All prototype tested models have passed three-phase symmetrical short circuit test to ensure system protection and reliability.

Generator and Load Compatibility

The generator must be fully compatible with the rated voltage, phase, and frequency of the connected electrical loads. The generator, connected electrical devices, or both, can be damaged if voltage, phase, and frequency are not compatible.

NOTE: This manual assumes that the generator set has been properly selected, installed and interconnected by a competent, qualified electrician or installation contractor. Once the installation is complete, do nothing that may result in non-compatibility between the generator and connected electrical loads.

Single-Phase "A" or "M" Code Units

The following statement applies to single-phase units with an "A" or "M" code alternator:

The generator is suitable for supplying typical residential loads, such as induction motors (sump pumps, refrigerators, air conditioners, furnaces, etc.), electronic components (TV, computer, monitor, etc.), lighting loads, and microwaves.

Three-Phase Load Imbalance Limits

For three-phase units the maximum load imbalance between phases can not exceed 25% of rated load (current).

Ambient Condition Derate

The maximum ambient temperature for the generator is indicated on the unit data label. Derate values for ambient temperature in excess of that indicated on the data label, as well as altitude, may apply depending on the engine and kW rating of the unit. Contact an IASD for any derate values applicable to this specific generator at its installed location.

Engine and Generator Protective Devices (If Equipped)

The generator set may be required to operate for long periods of time without an operator to monitor conditions such as coolant temperature, oil pressure, voltage, frequency, etc. For this reason, the generator set has numerous sensors to provide the control panel with the information it needs to protect both the engine and generator. The control panel is designed to shut down the engine if potentially damaging conditions occur. These conditions can include low oil pressure, high coolant temperature, low coolant level, engine overspeed, over or under voltage, over or under frequency, etc. These settings are configured at the factory and can be adjusted by an IASD if required.

NOTE: Engine and generator protective devices are only mentioned here for the owner's general information. For details, consult the applicable control panel technical manual. The list below is not all inclusive.

Coolant Temperature Sensor

The control panel automatically shuts down the engine if the engine coolant temperature rises above a safe level.

Low Coolant Level Sensor

Should the engine coolant level drop below the level of the low coolant temperature sensor, it is possible for the engine to overheat without automatic shutdown. To prevent such overheating, the engine has a low coolant level sensor. If the level of engine coolant drops below the level of the low coolant level sensor, the control panel will shut the engine down.

Oil Pressure Sensor

This sensor monitors engine oil pressure. If oil pressure drops below a safe level, the control system automatically shuts down the engine.

Oil Temperature Sensor (If Equipped)

The control panel automatically shuts down the engine if the oil temperature rises above a safe level.

Overspeed Shutdown

A speed circuit controls engine cranking, startup, operation, and shutdown. Engine speed signals are delivered to the control panel whenever the unit is running. Should the engine overspeed above a safe, preset value, the control panel initiates an automatic engine shutdown.

Overcrank Shutdown

After a pre-specified duration of cranking, this function ends the cranking if the engine has failed to start. The default settings are:

- The unit will attempt to start (crank) three times.
- Each crank cycle lasts either 10 or 15 seconds, followed by a five second rest (to cool the starter).
- After three starting attempts the unit will shutdown.

RPM Sensor Loss Shutdown

If the speed signal to the control panel is lost, engine shutdown will occur.

Low Fuel Pressure Warning

- Some gaseous units are equipped with a low fuel pressure warning switch which will trigger a Warning alarm if the fuel pressure drops below a minimum setting.
- Diesel units with fuel tanks are equipped with High and Low fuel level warning alarms, as well as a low fuel level shutdown alarm.

DC Fuses

Located inside the front panel, the fuses protect the control panel wiring and components from damaging overload. For fuse location and identification, see the corresponding control panel manual.

Fuel System

This generator set is equipped with one of the following fuel systems:

- Diesel fuel system
- Natural Gas (NG) fuel system
- Bi-Fuel Diesel and Natural Gas
- LP gas vapor withdrawal fuel system (LPV)
- LP liquid withdrawal fuel system (LPL)
- Dual fuel system: Natural Gas (primary fuel source), LP gas vapor (secondary fuel source)
- Dual fuel system: Natural Gas (primary fuel source, LP liquid (secondary fuel source)

Diesel Fuel System

The manufacturer recommends the use of No. 2 diesel fuel when temperatures are above freezing, and No. 1 diesel fuel when temperatures drop below freezing. Diesel fuel must meet the following requirements:

Beginning October 1, 2010, owners and operators that use diesel fuel must use diesel fuel that meets:

- Sulfur content of 15 parts per million (ppm) maximum.
- Cetane index or aromatic content as follows: A minimum cetane index of 40, or a maximum aromatic content of 35 volume percent.

Natural Gas Fuel System

Natural gas is supplied by a local utility in its vapor state through in ground piping.

Bi-fuel Fuel System

Combines diesel fuel and natural gas fuel systems.

LP Fuel System

LP is supplied as a liquid in pressurized tanks. It is usually made up of propane, butane, or a mixture of both gases.

LP Vapor Withdrawal Fuel System

Utilizes the vapors formed above the liquid fuel in the supply tank. Approximately 10 to 20 percent of the tank capacity is needed for fuel expansion from the liquid to the vapor state.

LP Liquid Withdrawal Fuel System

LP in a liquid withdrawal system must be converted to its gaseous state before it is introduced into the engine carburetor. A vaporizer converter is used to accomplish this. In such a converter, heated engine coolant is ported through the converter to provide the necessary heat for conversion of the fuel from a liquid to a gaseous state.

NOTE: Units with LP gas liquid withdrawal systems incorporate a block heater as standard equipment. The heater is powered by the utility power source during non-operating periods to provide heated coolant to aid in the fuel vaporization process.

Dual Fuel: NG/LP Fuel System

Some applications consist of a dual-fuel system. This type of fuel system allows the generator to run on either natural gas (primary) or LP vapor or liquid (secondary). In the event that the primary source (utility supplied) becomes unavailable, the unit automatically switches to the secondary source. It can do so while in operation or while not operating.

NOTE: Engines using propane as an alternative fuel are limited to a maximum of 100 hours per year solely during emergency operations and must keep records of such use. Further operation requires a performance test to confirm compliance with the emissions standards of §60.4233.

Specifications

Generator

Refer to the data plate on the generator for rated watts, amperes, frequency, voltage, phase, and other important information.

Engine Oil Recommendations

The engine has been filled with factory engine oil of a grade recommended by the engine supplier. See the applicable engine service manual for engine oil recommendations.

The manufacturer recommends an initial oil and filter change after the first 50 hours (or first three months) of service operation. Use a high quality detergent oil with an appropriate classification and viscosity for the engine type and ambient temperature conditions. Contact your IASD for oil recommendations. Synthetic oils meeting the same service category and viscosity requirements for the application may be used.

- Recommended API Service Category for gaseous engines: SJ, SL, SM, or SN.
- Recommended API Service Category for diesel engines: CH-4, CI-4, or CJ-4

Coolant

DANGER

Risk of poisoning. Do not use mouth to siphon coolant. Doing so will result in death or serious injury.

(000149)

WARNING

Risk of burns. Do not open coolant system until engine has completely cooled. Doing so could result in serious injury.

(000154)

CAUTION

Risk of overheating. Do not use any chromate base rust inhibitor with propylene glycol base antifreeze, boosters, or additives. Doing so will cause overheating and possible equipment damage. (000165a)

Use only deionized or distilled water and Ethylene glycol antifreeze (Propylene glycol can also be used but do not mix with Ethylene glycol). When adding coolant, always add the recommended 50-50 mixture.

Gearbox Lubrication (If Equipped)

Use only SAE 90 gear oil with the correct proportion of Lucas Heavy Duty Oil Stabilizer. See the ***Maintenance*** section for more information.

Starting Aids (If Equipped)

One or more of the following starting aids may be provided to ensure quicker, easier starts under varying climactic conditions.

- Engine coolant heater
- Engine oil heater
- Battery warmer
- Glow Plugs

These aids are powered by a normal (utility) power source during non-operating periods.

Engine Coolant Heater

Heats the engine coolant when the unit is not operating. This action keeps the engine warm even in cold weather, helping to ensure quicker starts. Powered by a circuit normally fed by the utility power supply.

Engine Oil Sump Heater

Keeps the oil in the sump heated to allow easier starting and faster engine warm-up. Powered by a circuit normally fed by the utility power supply.

Battery Warmer

Keeps the battery warm so it can provide full cranking current when starting in cold conditions. Powered by a circuit normally fed by the utility power supply.

Glow Plugs / Intake Air Heater

Internally heat the cylinders of a diesel engine. This assists in achieving a chamber temperature high enough for combustion. Powered by a circuit normally fed by battery power.

Section 3 Operation

Generator Control and Operation

WARNING

Equipment damage. Only qualified service personnel may install, operate, and maintain this equipment. Failure to follow proper installation requirements could result in death, serious injury, and equipment or property damage. (000182a)

The operation of this generator set should only be performed by an Authorized Operator, that is, someone who has been properly trained by an IASD. Contact your local IASD for assistance in training Authorized Operators.

The following instructions assume that the generator has been properly installed, serviced, tested, adjusted, and otherwise prepared for use by a competent, qualified installation contractor and IASD. Carefully read the Safety Rules and any other safety information before attempting to operate this (and related) equipment.

Grounding the Generator

Ground the generator set in accordance with all codes and regulatory requirements.

DANGER

Explosion and Fire. Do not connect ground wire to any pipe that carries a flammable or explosive substance. Doing so will result in death or serious injury. (000211)

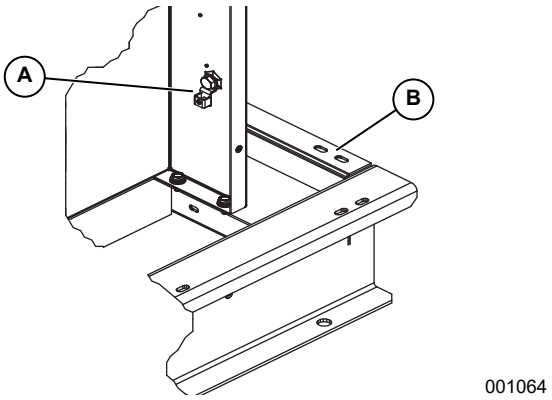

Figure 3-1. Grounding Electrode Terminal (Typical)

A	Grounding Electrode Terminal
B	Base Frame

Generator AC Neutral Connections

Grounding is recommended only at one point in the system. Consult local building codes for proper neutral grounding requirements.

Initial Startup

The initial startup of the generator set must be performed and documented by an IASD.

Control Panel Interface

The Control Panel Interface mounted on the generator allows the operator to monitor, and if necessary, manually start the generator.

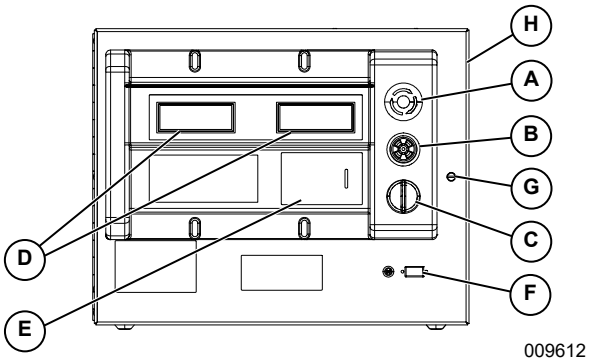

Figure 3-2. H-Panel

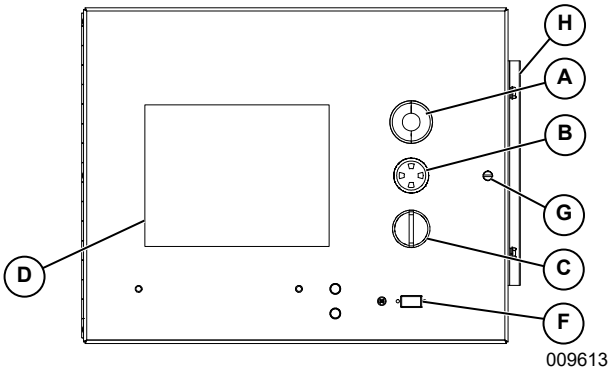

Figure 3-3. G-Panel

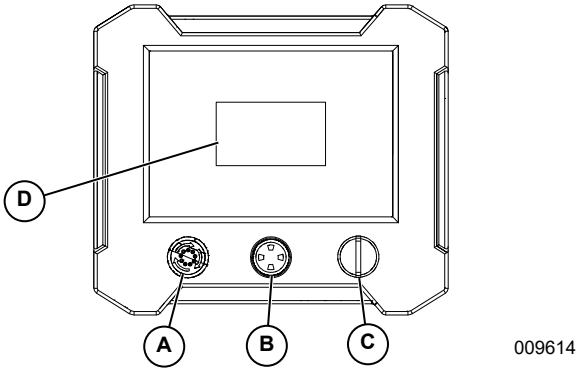

Figure 3-4. Power Zone® Pro

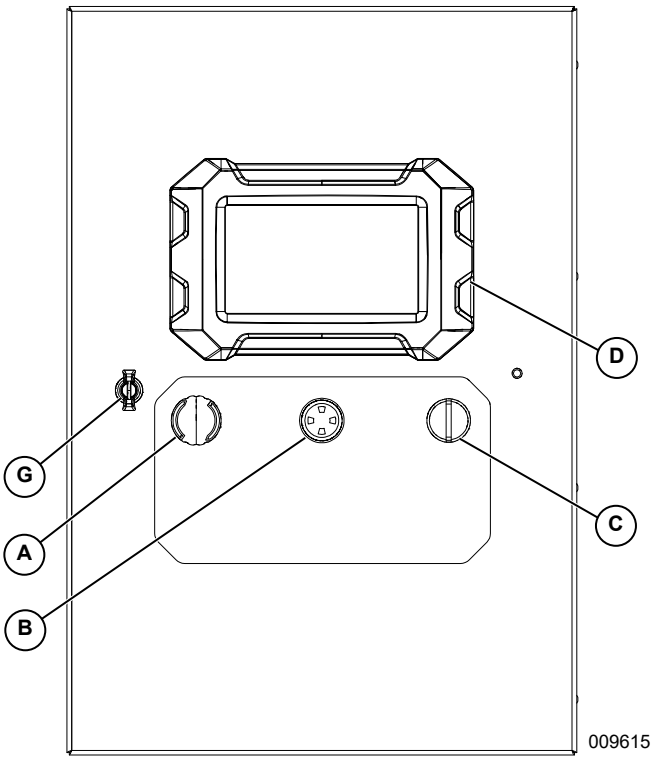

Figure 3-5. Power Zone Pro Sync

A	Emergency Stop Button
B	Common Alarm
C	Key Switch
D	Display Window
E	Arrow Key Pad
F	Communication Port
G	Panel Access
H	Battery Charger

NOTE: Refer to the accompanying control panel manual for more information.

Emergency Stop Button

Pressing the Emergency Stop button while the unit is running will immediately shut the generator down. To restart the unit, the Emergency Stop Button must be manually reset, the alarm acknowledged, the Key Switch turned to the OFF position, and then turned to either the AUTO or MAN position, depending on the desired mode of operation.

CAUTION

Equipment Damage. The emergency stop switch is not to be used to power down the unit under normal operating circumstances. Doing so could result in equipment damage. (000246b)

Common Alarm Horn

The Common Alarm and corresponding output are activated whenever a fault condition is set for Alarm and if the fault is Active. The Common Alarm will not activate on Warnings or DTC fault conditions. Pressing the ENTER button on the key pad will acknowledge the alarm and silence the horn. The manufacturer recommends that the local IASD be notified of any alarm condition in order for qualified service personnel to assess and correct the situation.

Key Switch

The Key Switch positions are:

- **AUTO:** The generator will automatically start when a properly connected automatic transfer switch senses a loss or reduction of available utility power.
- **OFF:** Immediately shuts down the generator and prevents it from starting automatically.
- **MAN:** Immediately starts the generator.

Fuse Block

The fuse block is located inside the control panel at the back lower left corner, and provides electrical protection for the DC power, wiring and other electrical components.

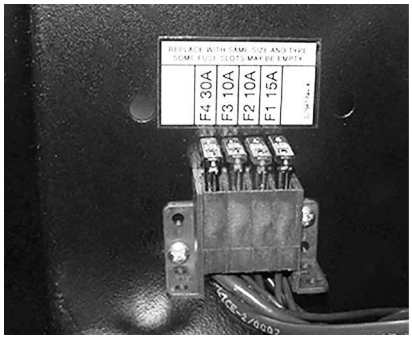

001066

Figure 3-6. Panel Fuse Block (Reference Only)

NOTE: Some units will NOT have a fuse in the F4 slot.

Additional Components

Main Line Circuit Breaker (MLCB)

A MLCB is located in the High Voltage Customer Connections panel, typically located to the right of the Control Panel. The MLCB serves as protection for the AC wiring and alternator, while also providing a means of disconnecting the generator.

Automatic Transfer Switch

DANGER

Electrocution, equipment and property damage. Handle transfer switches carefully when installing. Never install a damaged transfer switch. Doing so could result in death or serious injury, equipment and property damage. (000195)

A typical automatic transfer switch monitors utility voltage and when that voltage falls outside of specific parameters, it will initiate the generator start command. As long as the generator control is in the AUTO position, it responds to the automatic transfer switch start command.

For information about any connected automatic transfer switch, consult the applicable transfer switch owner's manual.

Automatic Battery Charger

One of the following types of battery chargers may be provided:

- 2.5-amp
- 10-amp
- 20-amp

The 2.5-amp charger is 12 VDC only. The 10-amp charger is available either as a 12 VDC or 24 VDC. The 20-amp charger operates as both 12 VDC or 24 VDC. The appropriate battery charger is installed per the engine's battery system.

All chargers are fully automatic float types and are fully fuse protected (input and output). They have automatic current limiting to reduce risk of overcharging, and have automatic maintenance of charge voltage. Therefore, they can be connected to the batteries continuously.

The chargers require the connection of a charged battery in order to turn on. The battery provides boost voltage for the charger, so a completely dead battery will not allow the charger to operate. The boost required is approximately 9 to 11 volts for a 12 VDC system, and 18 to 22 volts for a 24 VDC system. Replace the battery if it is below the boost voltage.

Alarm Response Procedures

The generator is protected by factory set alarms and warnings. The alarms and warnings alert the owner of a fault condition that requires attention and action to keep the generator operating in an efficient and safe running order.

When any alarm is triggered, the Common Alarm Horn sounds and the corresponding fault will be displaed.

NOTE: Not all faults can be corrected and cleared by the owner/operator. Some Warnings, and most Alarm conditions, must be safely cleared by a qualified dealer or trained technician.

Warnings

Warnings are the lowest level alarm, and are generated to alert the operator that an operating condition has changed and may require action or inspection. Warnings clear once they are no longer active.

Non-Shutdown Alarms

Non-shutdown alarms are more urgent than warnings, and indicate a system parameter which is approaching or has exceeded a safe operating limit. Non-shutdown alarms require some form of action, such as inspection, close monitoring, etc. These types of alarms clear when they are no longer active and have been acknowledged.

Shutdown Alarms

Shutdown Alarms protect the generator from damage and indicate a system fault that, if continued without immediate inspection or correction, would result in damage to the unit. Shutdown Alarms are cleared only after the key switch has been placed in the OFF position and they are no longer active.

Alarm Display Window

For information regarding alarm codes and troubleshooting procedures, see the applicable manual for your control panel.

General Fault Response Procedure

NOTE: See corresponding control panel manual for detailed alarm descriptions and specific procedures.

1. Use the keypad or touch screen to navigate to the Alarm Display.
2. Carefully read each line of the Alarm Warning Page to determine what fault condition is present. If there is more than one fault, the most recent is listed first.
3. Depending on the fault condition, toggle to the corresponding area.
4. Observe the information displayed for the affected area.
5. Determine corrective action necessary.
6. When the fault condition is cleared, the Alarm Display will turn off.

Operating the Unit with an Automatic Transfer Switch

If the generator has been installed along with an automatic transfer switch, the engine may be started and stopped automatically or manually.

NOTE: Refer to the applicable manual for any transfer switch being used and note the dangers during operation.

Normal operation is the generator in AUTOMATIC working with an automatic transfer switch. When the transfer switch senses a utility failure or loss it will provide a start command to the generator, the generator will automatically start and the transfer switch will transfer power to the load from utility to generator (emergency). It is important that both the generator and any connected automatic transfer switch(es) be properly connected and in AUTOMATIC mode for normal operation.

Operating the Unit with a Manual Transfer Switch

If the generator was installed in conjunction with a transfer switch capable of manual operation only, or when an automatic transfer switch has failed and can only be transferred manually, the following procedure applies. A manually operated transfer switch is one that will not provide automatic startup.

DANGER

Electrocution. Do not manually transfer under load. Disconnect transfer switch from all power sources prior to manual transfer. Failure to do so will result in death or serious injury, and equipment damage. (000132)

DANGER

Electrocution. Only authorized personnel should access transfer switch interior. Transfer switch doors should be kept closed and locked. Failure to do so will result in death or serious injury. (000213)

Manual Engine Startup and Transfer

Refer to the applicable documentation for the control panel. For additional and specific information about any transfer switch connected to the generator, refer to the applicable transfer switch manual as well.

In order to manually transfer load from the utility source to the generator (emergency source):

1. With the generator OFF, and the generator MLCB in the OFF (OPEN) position, turn OFF or disconnect the utility power circuit to the transfer switch, using the means provided (such as the utility source MLCB or other means of disconnect).
2. Manually set the automatic transfer switch (ATS) to its EMERGENCY (STANDBY/GENERATOR) position with load circuits connected to the emergency (generator) power supply.
3. Set the generator's MLCB to its OFF (OPEN) position.
4. Start the generator.
5. Allow the engine to stabilize and warm up.
6. Check all applicable instrument and gauge readings. When certain that all readings are correct, set the emergency generator's MLCB to its ON (CLOSED) position.
7. Load circuits are now powered by the stationary emergency generator.

Re-Transfer and Shutdown

To manually transfer the load back to the utility power source and shut down the generator:

1. Set the stationary emergency generator's MLCB to the OFF (OPEN) position.
2. Verify utility power to the transfer switch is OFF (open the utility disconnect).
3. Manually move the ATS to the UTILITY (NORMAL) position, i.e., load circuits connected to the utility.
4. Turn ON the utility power supply to the transfer switch using the means provided (such as the utility power source MLCB).
5. Allow the generator to run at no-load for five to ten minutes to stabilize internal temperatures.
6. Shut down the generator.

Shutting Generator Down While Under Load

IMPORTANT NOTE: To turn the generator OFF during utility outages to perform maintenance, or conserve fuel, follow these steps:

To turn the generator OFF (while running in AUTO and ONLINE):

1. Turn the main utility disconnect OFF.
2. Turn the MLCB on the generator to OFF (OPEN).
3. Allow the generator to run for five minutes to cool down.
4. Turn the generator OFF.

To turn the generator back ON:

1. Put the generator back into AUTO and allow to start and warm-up for a few minutes.
2. Set the MLCB on the generator to ON.

The system will now be operating in AUTOMATIC mode. The main utility disconnect can be turned ON (CLOSED). To shut the unit OFF, this complete process must be repeated.

Section 4 Maintenance

Maintenance

Regular maintenance will improve performance and extend engine/equipment life. Generac Power Systems, Inc. recommends that all maintenance work be performed by an Independent Authorized Service Dealer (IASD). Regular maintenance, replacement, or repair of the emissions control devices and systems may be performed by any repair shop or person of the owner's choosing. To obtain emissions control warranty service free of charge, the work must be performed by an IASD. See the emissions warranty.

Periodic inspection, service, and maintenance of this unit is critical in ensuring its reliable operation. The following is the manufacturer's recommended maintenance schedule. The established intervals are the maximum required when the unit is used in typical standby service applications (approximately 250 hours per year). The maintenance items will need to be performed more frequently if the unit is used in severe applications (such as long duration outages, very high or very low ambient conditions, or extremely dirty or dusty environments). Use calendar time or hours of operation, whichever occurs first, from the previous maintenance interval to determine the next required maintenance interval. Note that some checks are based only on hours of operation.

There may be times when the generator must operate continuously for long periods of time (for example, extended utility outages). During such extended operational periods some items will require more frequent checking (based on hours). Use the "Extended Run-Time Maintenance Checks" recommendation for such periods of operation.

Be sure to follow all applicable safety and caution statements found in the unit operating manual or engine service/maintenance manual before performing any maintenance checks or service.

Service Maintenance Intervals

Extended Run-Time Maintenance Checks: Daily checks which must be performed when the unit is operated continuously for extended periods of time. These checks and routine monthly checks can be performed by an Authorized Operator.

NOTE: For units equipped with a gearbox, the gearbox oil should be checked monthly or every 100 hours of operation.

1A. A **one-time** post installation, initial operation, service inspection of the generator set to ensure it is ready to operate, transfer to, and carry the load when required, and to identify any potential problem areas. *Performed ONLY ONCE following the first three months or first 50 hours of operation after installation and startup of the unit.*

The various service maintenance intervals are designated by interval numbers:

1. A frequent, periodic inspection of the generator set to ensure it is ready to operate when required and to identify any potential problem areas. *Performed monthly, or every 24 hours (interrupted) of operation of the unit.*
2. An operational service inspection of the generator set to ensure it is ready to operate and carry the load when required, and to identify any potential problem areas. *Performed semi-annually (6 months) or every 125 hours of operation of the unit.*
3. A mid-level service inspection of the generator set to ensure it is ready to operate and carry the load when required, and to identify any potential problem areas. *Performed annually or every 250 hours of operation of the unit.*
4. A comprehensive service inspection of the generator set to ensure it is properly serviced and ready to operate and carry the load when required, and to identify any potential problem areas. *Performed biannually (every 24 months or 500 hours).*

NOTE: Maintenance levels 2, 3, and 4 require the use of the applicable engine service manual and must be performed by a qualified service technician.

Maintenance Schedule

The following pages contain the maintenance schedule describing the checks/tasks which need to be accomplished at each designated maintenance interval. Some maintenance level tasks are combined. For example, if the six month tasks are due, both the monthly and the six month task should be completed at the same time. Similarly, when the annual tasks are due, the monthly and semi-annual tasks should also be completed. There is space on the sheets for recording the date and signature of the person completing the task, as well as recording the engine hours and other pertinent information. At the bottom of each sheet, space is also provided to record any fluids added, parts replaced or corrective action taken. All of this recorded information provides a detailed maintenance history of the unit. This maintenance history may be required for warranty validation purposes, and is a good idea to maintain throughout the lifetime of the unit.

It is recommended by the manufacturer that service procedures beyond the normal monthly checks be performed by an IASD.

Notes and Maintenance Item Explanations

Maintenance Item	Description
Oil and Oil Filter	Change oil and filter shortly after start up or commissioning of the unit. The recommendation is that this be done after the first 50 hours of operation or after the first three months of service. Perform oil and filter changes every 250 hours (or yearly) thereafter. If an oil analysis program is used (annually), the acceptable oil change interval can be extended to 500 hours or every two years, based on the results of the analysis.
Gearbox Oil (If Equipped)	Change gearbox oil every two years or 600 hours of operation. Check gearbox oil level monthly or every 100 hours of operation.
Coolant Quality	Check coolant annually for proper thermal protection levels. Drain, flush, and refill the cooling system with fresh coolant every two years regardless of operating hours.
Flexible Hoses	Change coolant, fuel (gaseous supply hoses from regulator to mixer), oil, charge air cooling, and block heater hoses, flexible joints, etc.) every two years regardless of operating hours.
Accessory drive belts	Replace accessory drive belts every two years regardless of operating hours. If necessary, check and replace automatic tensioner (if used).
Magnetic Pickup(s) mounted on flywheel housing	Remove, clean, inspect, and reset magnetic pickups to the correct operational output voltage every two years.
Crank and/or Cam Pickup for ignition system	Visually inspect (outside) for cleanliness and tightness.

NOTE: Certain applications may require more frequent maintenance checks and more frequent operation under load.

NOTE: This schedule does not reflect all of the possible requirements of an individual engine manufacturer service schedule, particularly if the unit is used in other than a standby power application.

NOTE: For more information about service schedules and support for your application, please contact your local IASD.

Disabling a Generator for Maintenance

There are two conditions when maintenance checks may have to be performed on the unit:

1. When the unit is in standby mode (automatic) and NOT running. To disable the unit from starting in this condition, in order to perform maintenance checks or service, follow the steps in ***To Disable the Generator From Starting***.
2. When the unit is running and providing power to the load. To shut down the unit safely, without damaging loads or the generator, follow the steps for shutting down a unit while in operation. See ***Shutdown and Restart an Operating Generator***. Before shutting down an operating unit for maintenance, always warn personnel that power will be shut down temporarily, so equipment that might be damaged can be properly turned OFF or placed in standby.

To Disable the Generator From Starting

To prevent injury, BEFORE performing any maintenance, disable the generator set from starting and/or connecting to the load:

1. Set the control panel AUTO/OFF/MANUAL switch to the OFF position.
2. Remove the control panel fuse (see wiring diagram).
3. Turn OFF power to the battery charger (remove battery charger ATC style fuse or open the battery charger circuit breaker located in the load control panel).
4. Disconnect the negative battery cable.

NOTE: The battery charger must be turned OFF BEFORE disconnecting the battery cable to prevent an over-current condition from burning out sensitive control panel components and circuits.

NOTE: Following any maintenance, reverse these steps so the unit is returned to standby setup for normal operation.

Shutdown and Restart an Operating Generator

If the unit is operating and required checks must be performed:

1. Verify power to the load can be interrupted (warn any equipment users that there will be a temporary power disruption). There may be other procedures

that must be done before shutting a unit down, depending on application.

2. Open the utility MLCB.
3. Open the generator MLCB.
4. Allow the unit to cool down (running at no-load) for approximately five minutes to prevent damage to critical engine components.
5. Set the control panel AUTO/OFF/MANUAL switch to the OFF position. There may be safety tag-outs or lockouts required at this point, depending on application.
6. Perform the necessary maintenance checks or tasks (based on the hourly requirements).
7. When all checks have been completed and any discrepancies corrected, set the control panel AUTO/OFF/MANUAL switch to the AUTO position.
8. When the generator is running, and all engine/generator parameters (voltage, frequency, coolant temp, oil pressure, etc.) have been verified as correct, close the generator MLCB. The unit will accept and carry the load.
9. Make a last visual inspection of the generator set to make sure it is operating properly.
10. Close the utility MLCB.

Maintenance Tasks

Visually Inspect Unit

Perform a visual inspection of the unit periodically. If problems are found contact your local IASD. Look for the following:

- Any debris, trash, grass or weed growth, which would obstruct the flow of cooling air into and out of the unit ventilation louvers.
- Visually inspect hoses and hose connections for signs of leakage. This includes all coolant hoses, fuel hoses, exhaust system connections, intake system connections, etc. Also look at the engine block and gearbox (if equipped) for signs of fluid leakage.
- Visually inspect the engine accessory drive belts for evidence of obvious wear, fraying or deterioration, and obvious looseness. A “squealing” sound heard during starting and running could indicate a loose belt.

Check Engine Fluids

The following checks can be performed by a trained Authorized Operator. Observe all safety precautions outlined in ***Introduction and Safety***.

Check Engine Oil Level

An Authorized Operator should check the levels of engine oil and engine coolant monthly (or every 24 hours of operation). The oil level should be maintained between the FULL and ADD marks on the engine dipstick. Recommended fluids are listed in ***Engine Oil Recommendations***.

To check the engine oil:

1. Locate the engine oil dipstick.
2. The most accurate oil level readings are measured when the engine is cold. If the engine was running, wait at least ten minutes before proceeding.
3. Remove the dipstick and wipe it dry with a clean, lint free cloth.
4. Slowly insert the clean dipstick into the tube. Visually confirm that the dipstick is fully seated in the dipstick tube. A visual inspection is required because some dipsticks will require more effort than others to fully seat.
5. After ten seconds remove the dipstick.
6. Look at the oil level on both sides of the dipstick. The lower of the two readings will be the correct oil level measurement.
7. Add oil (if necessary) to adjust the level. After adding or changing the oil, the engine should run for one minute before checking the oil level. Remember to wait ten minutes to allow the engine to cool and oil to fully drain into the oil pan.

Typical causes of inaccurate oil level readings:

- Reading the high level of the dipstick.
- Reading the dipstick before the oil fully drains into the oil pan.
- Inserting and removing the dipstick too quickly.
- The dipstick is not fully seated in the dipstick tube.

Check Coolant Level

DANGER

Risk of poisoning. Do not use mouth to siphon coolant. Doing so will result in death or serious injury.

(000149)

WARNING

Risk of burns. Do not open coolant system until engine has completely cooled. Doing so could result in serious injury.

(000154)

CAUTION

Risk of overheating. Do not use any chromate base rust inhibitor with propylene glycol base antifreeze, boosters, or additives. Doing so will cause overheating and possible equipment damage. (000165a)

Visually check the coolant expansion tank and verify the coolant level is between the “Cold” and “Hot” level markings. To add coolant to the system add it to the expansion tank when the engine is cool (not at operating temperature, not running). Add only a 50/50 mixture of the correct antifreeze and distilled or deionized water to the coolant system.

Check/Change Gearbox Oil (If Equipped)

Check monthly, or every 100 hours of operation. Biannually (or every 600 hours), an authorized service technician should completely drain and refill the gearbox.

Gear oil used is 80W-90. Lucas Heavy Duty Oil Stabilizer should be added as follows by Fluid volume:

- 390 Gearbox - Approximately 32 oz. total. 26 oz. gear oil and 6 oz. Lucas Heavy Duty Oil Stabilizer.
- 520 Gearbox - Approximately 55 oz. total. 44 oz. gear oil and 11 oz. Lucas Heavy Duty Oil Stabilizer.

To check gearbox oil level:

1. Disable the generator from starting.
2. Remove the oil level check plug. See *Figure 4-1*.
3. The oil level should be at the bottom edge of the oil level check plug hole.
4. To add oil, remove the oil filler/vent cap, and fill through the vent line.
5. Replace the vent cap and oil level check plug and tighten.

NOTE: Do NOT overfill the gearbox. If too much fluid is added let the excess drain from the level check plug hole and collect it in a suitable container or with rags.

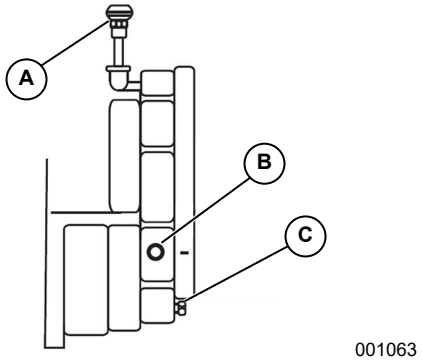

Figure 4-1. Gearbox Oil Servicing Points

A	Oil Filler/Vent Cap
B	Oil Level Check Plug
C	Oil Drain Plug

To change the gearbox oil:

1. Disable the generator from starting.
2. Remove the oil drain plug and drain the oil into an appropriate container. Properly dispose of or recycle the oil.
3. Reinstall the oil drain plug.
4. To add oil to the gearbox, remove the oil level check plug and oil filler/vent cap.
5. Add the recommended oil/stabilizer mix until it just starts to flow from the oil level check plug opening.
6. Install and tighten the oil filler/vent cap and oil level check plug.

Return the generator to operating condition. Start the unit and check for leaks.

Battery Inspection

DANGER

Electrocution. Do not wear jewelry while working on this equipment. Doing so will result in death or serious injury.

(000188)

WARNING

Sudden start-up. Always set the safety disconnect switch to MANUAL before working on equipment. Failure to do so could result in death or serious injury.

(000194)

WARNING

Explosion. Batteries emit explosive gases while charging. Keep fire and spark away. Wear protective gear when working with batteries. Failure to do so could result in death or serious injury.

(000137a)

WARNING

Explosion. Batteries emit explosive gases. Always disconnect negative battery cable first to avoid spark. Failure to do so could result in death or serious injury. (000238)

WARNING

Explosion. Do not dispose of batteries in a fire. Batteries are explosive. Electrolyte solution can cause burns and blindness. If electrolyte contacts skin or eyes, flush with water and seek immediate medical attention.

(000162)

WARNING

Risk of burn. Do not open or mutilate batteries. Batteries contain electrolyte solution which can cause burns and blindness. If electrolyte contacts skin or eyes, flush with water and seek immediate medical attention. (000163a)

WARNING

Vision Loss. Eye protection is required to avoid spray from spark plug hole when cranking engine. Failure to do so could result in vision loss.

(000181)

WARNING

Environmental Hazard. Always recycle batteries at an official recycling center in accordance with all local laws and regulations. Failure to do so could result in environmental damage, death, or serious injury. (000228)

An Authorized Operator should inspect the engine battery system monthly. At this time, the battery fluid level should be checked and distilled water added if needed. Battery cables and connections also should be inspected for cleanliness and corrosion.

Once every six months, an Authorized Service Technician should inspect the battery system. At this time the battery condition and state of charge should be checked using a battery hydrometer. The battery should be recharged or replaced as required.

NOTE: A negative ground system is used. Battery connections are shown on the wiring diagrams. Verify the battery is correctly connected and terminals are tight. Observe battery polarity when connecting the battery to the generator set.

Battery Installation and Replacement

When required, the battery must be replaced with one of equivalent size, voltage, and CCA (cold crank amp capacity). Consult the Unit Specification Sheet or contact the local IASD for proper battery sizing.

A new battery must be filled with the proper electrolyte and be fully charged before installing.

Preliminary Instructions

1. Set the AUTO/OFF/MANUAL switch on the generator control panel to OFF.
2. Turn off utility power supply to the battery charger circuit.
3. Remove the 10A fuse from the generator control panel.
4. Remove the ATC style fuse from the battery charger.

Battery cables are connected to the generator connection points at the factory. Connect the cables to the battery posts as shown in *Figure 4-2* and *Figure 4-3*.

12 VDC System

1. Connect the red battery cable from the starter contactor to the positive (POS or +) battery post.

2. Connect the black battery cable to the frame ground to the negative (NEG or -) battery post.

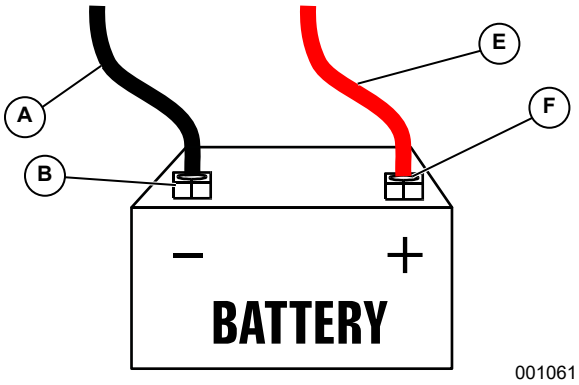

Figure 4-2. 12 VDC System

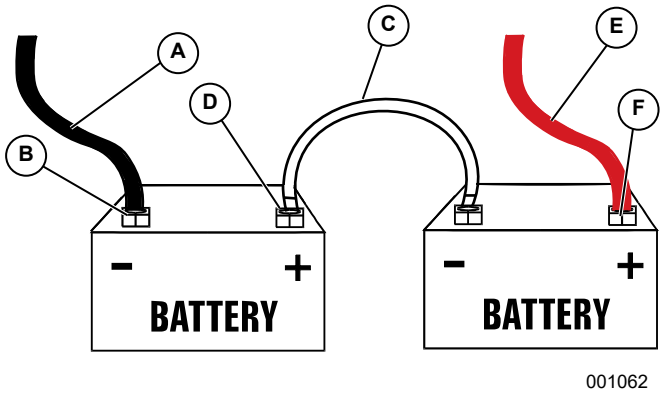

Figure 4-3. 24 VDC System

A	Black Lead to Frame
B	Black (-)
C	Red or Black Jumper
D	Wire 13 (if used)
E	Red Lead from Starter Contactor
F	Red (+)

24 VDC System

1. Connect the red battery cable from the starter contactor to the positive (POS or +) post of battery A.
2. Connect the black battery cable to the frame ground to the negative (NEG or -) post of battery B.

NOTE: On 24V gaseous units, center tap wire number 13 between the batteries as shown in ***Figure 4-3***.

3. Connect either a black or red jumper cable from the negative (NEG or -) post of battery A to the positive (POS or +) post of battery B.

Final Instructions

1. Install the ATC style fuse in the battery charger.
2. Install the 10A fuse in the generator control panel.
3. Turn on the utility power supply to the battery charger circuit.
4. If the unit was previously operational, turn the AUTO/OFF/MANUAL switch on the generator control panel to AUTO.

⚠WARNING

Environmental Hazard. Always recycle batteries at an official recycling center in accordance with all local laws and regulations. Failure to do so could result in environmental damage, death, or serious injury. (000228)

Always recycle batteries in accordance with local laws and regulations. Contact your local solid waste collection site or recycling facility to obtain information on local recycling processes. For more information on battery recycling, visit the Battery Council International website at: ***http://batterycouncil.org***

⚠CAUTION

Equipment damage. Do not make battery connections in reverse. Doing so will result in equipment damage.

(000167a)

Other Maintenance Checks

The following inspections should be performed by an IASD, or an Authorized Operator. These maintenance items require a high level of experience and skill to evaluate and correct.

- Inspect engine accessory drive belts
- Inspect hoses and connections
- Inspect fuel supply system
- Inspect exhaust system

Maintenance and Repair Parts

All non-emissions related service maintenance or repairs should be completed by an authorized service technician to maintain the warranty status of a unit. Emissions related maintenance and repairs may be performed by a person or repair shop of the owner's choosing.

Extended Run-Time Maintenance Checks

These maintenance tasks can be performed by an IASD or an Authorized Operator. Comply with all safety notices contained in the owner's manual.

IASD/Authorized Operator Maintenance Tasks. Perform steps 1 through 8 and 11 every 24 continuous operating hours.	Task Completed Date/Initials
1. Before shutting the unit down, perform a thorough visual inspection for leaks, loose components or connections, excessive apparent wear or damage. Any discrepancies noted should be further inspected and corrected while the unit is shut down.	
2. Shut the unit down per the procedure in the owner's manual.	
3. Check the engine oil level. The level should be between the low and full markings on the dipstick. Adjust as necessary.	
4. Check the engine coolant level. Make sure the level in the coolant catch tank is between the cold and hot level markings. Adjust as necessary. Use only a 50/50 mixture of appropriate coolant.	
5. Visually inspect the engine accessory drive belts and fan coupling device (if equipped) for correct tension and any signs of abrasion, wear, deterioration or damage. Correct as necessary.	
6. Visually inspect all hoses and connections (exhaust, intake, coolant, block heater, fuel lines and filters, oil filters, etc) for leaks, tightness, signs of deterioration, wear, or damage. Correct as necessary.	
7. Check the air inlets and outlets (enclosure or building vents) for debris or blockage. Correct as necessary.	
8. Visually inspect the fuel supply system for signs of leaks or damage. Correct as necessary.	
9. **Gearbox Equipped Only:** Check the gearbox oil level every 100 operating hours. Adjust as necessary.	
10. **Weekly When Operating:** Check the battery electrolyte level (if accessible). Adjust as necessary (add only distilled or deionized water to replenish battery cells).	
11. Return the unit to operational condition and restart. Check unit voltage and frequency. Visually inspect the unit for leaks, loose connections or components. Place the unit back in service.	

Date inspection Completed:	Unit Hour-Meter Reading:
IASD/Authorized Operator signature signifying inspection complete:	
Record any oil or coolant added and notes about any discrepancies found and corrective action taken.	

Maintenance Level 1A

One Time at 50 Hours / 3 Months. These maintenance tasks must be performed by an IASD. Comply with all safety notices contained in the owner's manual. Some of these tasks require the use of the applicable engine service manual.

IASD Tasks. Perform these tasks in addition to the regularly scheduled Monthly maintenance tasks	Task Completed Date/Initials
1. Disable the unit from operating per the procedure found in the owner's manual.	
2. Check engine valve clearance (valve lash) as specified in the engine service manual. NOTE: This is NOT required for engines with hydraulic lifters. Check the engine service manual.	
3. Change the engine oil.	
4. Change the oil filter(s).	
5. Check the engine accessory drive belts and fan coupling device (if equipped) for correct tension, wear or abrasion, deterioration, or damage. Correct as necessary.	
6. Check all hoses, piping, and connections (intake, exhaust, coolant, block heater, fuel and filters, oil lines and filters) for tightness, leaks, deterioration or damage. Correct as necessary.	
7. Check wiring connections (at MLCB, customer connections, control terminal strips, battery, etc) for loose connections, corrosion or damage. Correct as necessary.	
8. Return the unit to operational condition and test. Place the unit in automatic and open the service disconnect to force the unit to start and transfer to the load. Exercise the unit against the load for 15 minutes, visually inspecting for leaks, loose connections or components, and any abnormal operating conditions. Record the unit voltage, frequency, kW and kVA while running. Restore utility power and monitor transfer to utility, cool-down and shutdown. Correct any discrepancies. Voltage: Frequency: kW: kVA:	
9. If the control has alarm and/or event or run logs, record the alarm and event logs to a history file for the unit.	
10. Return the unit to operational condition.	

Date inspection Completed:	Unit hour Meter Reading:
IASD signature signifying inspection complete:	
Record any oil or coolant added and notes about any discrepancies found and corrective action taken.	

Maintenance Level 1 - Monthly or Every 24 Hours

These maintenance tasks can be performed by an IASD or an Authorized Operator. Comply with all safety notices contained in the owner's manual.

IASD/Authorized Operator Maintenance Tasks	Task Completed Date/Initials
1. Disable the unit from operating per the instructions in the owner's manual.	
2. Check the engine oil level. The level should be between the low and full markings on the dipstick. Adjust as necessary.	
3. **Gearbox Equipped Only:** Check the gearbox oil level. Adjust as necessary.	
4. Check the engine coolant level. Verify the level in the coolant catch tank is between the cold and hot level markings. Adjust as necessary. Use only a 50/50 mixture of appropriate coolant.	
5. Check the battery electrolyte level (if accessible). Adjust as necessary (add only distilled or deionized water to replenish battery cells).	
6. Check the battery terminal posts, connections, cables and charger connections, and battery hold-downs for signs of corrosion, looseness, etc. Remove, clean and tighten connections as necessary.	
7. Check operation and condition of the battery charger. Check operation and condition of optional block heater, oil sump heater, and battery warmer (if equipped). Correct discrepancies as necessary.	
8. Check the air inlets and outlets (enclosure or building vents) for debris or blockage. Correct as necessary.	
9. Visually inspect the fuel supply system for signs of leaks or damage. Correct as necessary.	
10. Perform a 5 minute, no-load operational test of the unit. Check unit voltage and frequency. Visually inspect the unit for leaks, wear, damage, loose connections or components, and corrosion. Correct as necessary. Voltage: Frequency:	
11. If the control has alarm and/or event or run logs, record the alarm and event logs to a history file for the unit.	
12. Return the unit to operational condition.	

Date inspection Completed:	Unit hour Meter Reading:
IASD/Authorized Operator signature signifying inspection complete:	
Record any oil or coolant added and notes about any discrepancies found and corrective action taken.	

Maintenance Level 2 - Semi-Annual or Every 125 Hours

These maintenance tasks must be performed by an IASD. Perform these tasks every six months or every 125 hours of operation. Perform these tasks in addition to the regularly scheduled Monthly maintenance tasks. Comply with all safety notices contained in the owner's manual. Some of the tasks will require the use of the applicable engine service manual.

IASD Tasks	Task Completed Date/Initials
1. Disable the unit from operating per the procedure found in the owner's manual.	
2. Check the engine accessory drive belts and fan coupling device (if equipped) for correct tension, wear, abrasion, deterioration, or damage. Correct as necessary.	
3. Check all hoses, piping, and connections (intake, exhaust, coolant, block heater, fuel and filters, oil lines and filters) for tightness, leaks, deterioration or damage. Correct as necessary.	
4. Load test the battery or test electrolyte levels (specific gravity) with a hydrometer.	
5. Return the unit to operational condition and test. Place the unit in automatic and open the service disconnect to force the unit to start and transfer to the load. Exercise the unit against the load for 15 minutes, visually inspecting for leaks, loose connections or components, and any abnormal operating conditions. Record the unit voltage and frequency while running. Restore utility power and monitor transfer to utility, cool-down and shutdown. Correct any discrepancies. Voltage: Frequency: kW: kVA:	
6. If the control has alarm and/or event or run logs, record the alarm and event logs to a history file for the unit.	
7. Return the unit to operational condition.	

Date inspection Completed:	Unit hour Meter Reading:
IASD signature signifying inspection complete:	
Record any oil or coolant added and notes about any discrepancies found and corrective action taken.	

Maintenance Level 3 - Annual or Every 250 Hours

These maintenance tasks must be performed by an IASD. Perform these tasks every 12 months or every 250 hours of operation. Perform these tasks in addition to the regularly scheduled Monthly and Semi-Annual maintenance tasks. Comply with all safety notices contained in the owner's manual. Some of the tasks will require the use of the applicable engine service manual.

IASD Tasks	Task Completed Date/Initials
1. Disable the unit from operating per the procedure found in the owner's manual. Some of the following tasks will require the use of the applicable engine service manual.	
2. Change the engine oil.	
3. Change the engine oil filter(s).	
4. Inspect the air filter. Replace as necessary.	
5. **Gaseous Units Only:** Inspect, clean, and gap the spark plugs. Replace as necessary.	
6. **Gaseous Units Only:** Inspect ignition wires for damage, deterioration and tightness. Replace as necessary.	
7. **Diesel Units Only:** Test the fuel quality. If required, strip any water/sediment from the tank. Filter or polish the fuel and add any additional additives required to maintain fuel quality.	
8. **Diesel Units Only:** Change the primary and secondary fuel filters (if equipped). Clean any water separator or mechanical strainer (if equipped). Prime and bleed the fuel system per the engine service manual procedures.	
9. Check the engine accessory drive belts and fan coupling device (if equipped) for correct tension, wear or abrasion, deterioration, or damage. Correct as necessary.	
10. Check all hoses, piping, and connections (intake, exhaust, coolant, block heater, fuel and filters, oil lines and filters) for tightness, leaks, deterioration or damage. Correct as necessary.	
11. Visually inspect the radiator and charge air core (if equipped) for any build up of dirt, debris, or oil contamination (external). Clean, correct as necessary.	
12. Check the coolant thermal protection level. Correct as necessary.	
13. Check all wiring connections in the high voltage and low voltage connection panels. Check for loose connections, corrosion, arcing or damage. Check torque on all main load lugs at generator connections (MLCB) and transfer switch connections (refer to applicable transfer switch manual). Correct as necessary.	
14. Return unit to operational condition and test. Place unit in automatic and open the service disconnect to force the unit to start and transfer to the load. Exercise unit against the load for 1 hour (60 minutes). Visually inspect for leaks, loose connections or components, and any abnormal operating conditions. Record unit voltage, frequency and kW while running. Restore utility power and monitor transfer to utility, cool-down and shutdown. Correct any discrepancies. Voltage: Frequency: kW: kVA:	
15. If control has alarm and/or event or run logs, record the alarm and event logs to a history file.	
16. Return the unit to operational condition and place back in automatic operation.	

Date inspection Completed:	Unit hour Meter Reading:
IASD signature signifying inspection complete:	
Record any oil or coolant added and notes about any discrepancies found and corrective action taken.	

Maintenance Level 4 - Bi-Annual or Every 500 Hours

These maintenance tasks must be performed by an IASD. Perform these tasks every 24 months or every 500 hours of operation. Perform these tasks in addition to the regularly scheduled Monthly, Semi-Annual and Annual maintenance tasks. Comply with all safety notices contained in the owner's manual. Some of the tasks will require the use of the applicable engine service manual.

IASD Tasks	Task Completed Date/Initials
1. Disable the unit from operating per the procedure found in the owner's manual. Some of the following tasks will require the use of the applicable engine service manual.	
2. Check engine valve clearance (valve lash) as specified in the engine service manual. **NOTE:** This is NOT required for engines with hydraulic lifters. Check the engine service manual.	
3. **Gearbox Equipped Only:** Change the gearbox oil. Can be extended to 600 hours.	
4. Replace the engine air filter(s).	
5. **Gaseous Units Only:** Replace the spark plugs. Gap per the engine specifications.	
6. Replace the engine accessory drive belts. Inspect and lubricate (if required) the belt tensioning device (if equipped) and replace if necessary.	
7. Drain and flush the cooling system. Refill with fresh coolant of appropriate type (50/50 mixture).	
8. Replace all flexible hoses: Coolant hoses including the block heater hoses and vaporizer hoses (if equipped); charge air system connection hoses/joints/couplings, and any flexible fuel or oil lines.	
9. Replace fuel filter. Verify the fuel system is bled and primed before running unit (diesel only).	
10. Remove, clean, inspect, reinstall and reset to correct voltage level the flywheel magnetic pickup(s) (if equipped).	
11. Return the unit to operational condition and test. Place the unit in automatic and open the service disconnect to force the unit to start and transfer to the load. Use an appropriate load bank to supplement load to full rated load (100% kW at rated kVA) if possible. Exercise the unit against the load for 2 hours (120 minutes). Visually inspect for leaks, loose connections or components, and any abnormal operating conditions. Record the unit voltage, frequency, kW and kVA while running. Remove the load bank load, restore utility power and monitor transfer to utility, cool-down and shutdown. Correct any discrepancies. Voltage: Frequency: kW: kVA:	
12. If control has alarm and/or event or run logs, record the alarm and event logs to a history file.	
13. Return the unit to operational condition and place back in automatic operation.	

Date inspection Completed:	Unit hour Meter Reading:
IASD signature signifying inspection complete:	
Record any oil or coolant added and notes about any discrepancies found and corrective action taken.	

Section 5 Warranty Information

For Stationary Emergency Spark-Ignited Generators

United States Environmental Protection Agency Warranty Statement (Stationary Emergency Spark-Ignited Generators)

Warranty Rights, Obligations and Coverage

The United States Environmental Protection Agency (EPA) and Generac Power Systems, Inc. (Generac) are pleased to explain the Emission Control System Warranty on your new stationary emergency engine. If during the warranty period, any emission control system or component on your engine is found defective in materials or workmanship, Generac will repair your engine at no cost to you for diagnosis, replacement parts and labor provided it be done by a Generac Authorized Warranty Service Facility. Your emission control system may include parts such as the fuel metering, ignition, and exhaust systems and other related emission related components listed below. Generac will warrant the emissions control systems on your 2009 and later model year engines provided there has been no abuse, neglect, unapproved modification, or improper maintenance of your engine. For engines less than 130 HP the warranty period is two years from the date of sale to the ultimate purchaser. For engines greater than or equal to 130 HP the warranty period is three years or 2500 hours of operation, whichever comes first, from the date of the engine being placed into service. For high-cost warranted components, the Emission Control System warranty is valid for 5 years or 3500 hours of operation, whichever comes first.

Purchaser's/Owner's Warranty Responsibilities

As the engine purchaser/owner you are responsible for the following: 1) The engine must be installed and configured in accordance to Generac's installation specifications. 2) The completion of all maintenance requirements listed in your Owner's Manual. 3) Any engine setting adjustment must be done in accordance and consistent with the instructions in the Owner's Manual. 4) Any emission control system or component must be maintained and operated appropriately in order to ensure proper operation of the engine and control system to minimize emissions at all times.

Generac may deny any and/or all Emission Control System Warranty coverage or responsibility of the engine, or an emission control system or component on your engine thereof, if it has failed due to abuse, neglect, unapproved modification or improper maintenance, or the use of counterfeit and/or “gray market” parts not made, supplied or approved by Generac. Warranty service can be arranged by contacting either your selling dealer or a Generac Authorized Warranty Service dealer, 1-800-333-1322 for the dealer nearest you. The purchaser/owner shall be responsible for any expenses or other charges incurred for service calls and/or transportation of the product to/from the inspection or repair facilities. The purchaser/owner shall be responsible for any and/or all damages or losses incurred while the engine is being transported/shipped for inspection or warranty repairs. Contact Generac Power Systems Inc. for additional Emission Control System Warranty related information, Generac Power Systems, Inc., PO. Box 8, Waukesha, WI 53187, or call 1-800-333-1322, email emissions@generac.com, or visit www.generac.com.

Important Note

This warranty statement explains your rights and obligations under the Emission Control System Warranty, which is provided to you by Generac pursuant to federal law. Note that this warranty shall not apply to any incidental, consequential, or indirect damages caused by defects in materials or workmanship or any delay in repair or replacement of the defective part(s). This warranty is in place of all other warranties, expressed or implied. Specifically, Generac makes no other warranties as to the merchantability or fitness for a particular purpose. Any implied warranties which are allowed by law, shall be limited in duration to the terms of the express warranty provided herein. Some states do not allow limitations on how long an implied warranty lasts, so the above limitation may not apply to you.

Emission Related Parts Include the Following (if so equipped)

1) Fuel Metering System

1.1) Gasoline Carburetor Assembly and Internal Components
A) Fuel Filter, B) Carburetor, C) Fuel Pump

1.2) Carburetion Assembly and Its Components
A) Fuel Controller, B) Carburetor and Its Gaskets, C) Mixer and Its Gaskets, D) Primary Gas Regulator, E) Liquid Vaporizer

1.3) Fuel Regulator

2) Air Induction System Including A) Intake Pipe/Manifold, B) Air Cleaner

3) Ignition System Including A) Spark Plug, B) Ignition Module, C) Ignition Coil, D) Spark Plug Wires

4) Exhaust System
A) Catalyst Assembly*, B) Exhaust Manifold, C) Muffler, D) Exhaust Pipe, E) Muffler Gasket

5) Crankcase Breather Assembly Including
A) Breather Connection Tube, B) PCV Valve

6) Oxygen Sensor

7) Diagnostic Emission-Control System

*High-Cost Warranted Component

Part No. 10000012792 Revision F (3/17)

United States Environmental Protection Agency Compliance Requirements (Stationary Emergency Spark-Ignited Generators)

Purchaser's/Owner's Record Keeping Responsibilities

The United States Environmental Protection Agency (EPA) and Generac Power Systems, Inc. (Generac) are pleased to explain your record keeping requirements for compliance with Subpart JJJJ- Standards of Performance for Stationary Spark Ignition Internal Combustion Engines as listed in the Electronic Code of Federal Regulations Title 40 Part 60. As the engine purchaser/owner who operates and maintains their certified emergency stationary engine and emission control system according to applicable emission related guidelines as specified in this Owner's Manual, you are required to meet the following notification and record keeping requirements to demonstrate compliance: 1) Maintain documentation that the engine is certified to meet emission standards. 2) Record keeping of maintenance conducted. 3) Record keeping of the provision allowing natural gas engines to operate using propane for a maximum of 100 hours per year as an alternate fuel solely during emergency operations provided the engine is not certified to operate on propane. 4) Meet all compliance notifications submitted to the purchaser/owner and maintain all supporting documentation. 5) Record keeping of hours of operation, including what classified the operation as emergency and how many hours are spent for non-emergency operation. For emergency engines greater than or equal to 130 HP, record keeping of hours of operation begins January 1, 2011. For emergency engines less than 130 HP, record keeping of hours of operation begins January 1, 2009; engines are equipped with non-resettable hour meters to facilitate record keeping.

Specific Air Quality Management or Air Pollution Control Districts may have different and additional record keeping/reporting requirements. Your permit to construct and/or operate the engine may be contingent upon compliance with those requirements. Check with your local Air Quality Management or Air Pollution Control District for specific requirements.

Emergency stationary internal combustion engines (ICE) may be operated for the purpose of maintenance checks and readiness testing, provided that the tests are recommended by Federal, State or local government, Generac, or the insurance company associated with the engine. Maintenance checks and readiness testing of such units is limited to 100 hours per year. There is no time limit on the use of emergency stationary ICE in emergency situations. The purchaser/owner may petition the Administrator for approval of additional hours to be used for maintenance checks and readiness testing, but a petition is not required if the owner maintains records indicating that Federal, State, or local standards require maintenance and testing of emergency ICE beyond 100 hours per year. Emergency stationary ICE may operate up to 50 hours per year in non emergency situations, but those 50 hours are counted towards the 100 hours per year provided for maintenance and testing.

The 50 hours per year for non-emergency situations cannot be used for peak shaving or to generate income for a facility to supply power to an electric grid or otherwise supply power as part of a financial arrangement with another entity. For purchaser/owner of emergency engines, any operation other than emergency operation, maintenance and testing, and operation in non-emergency situations for 50 hours per year, as permitted in this section is prohibited.

If you operate and maintain your certified emergency stationary SI internal combustion engine and emissions control systems in accordance to the specifications and guidelines in this Owner’s Manual, EPA will not require engine performance testing. If not, your engine will be considered non-certified and you must demonstrate compliance according to Subpart JJJJ - Standards of Performance for Stationary Spark Ignition Internal Combustion Engines as listed in the Electronic Code of Federal Regulations Title 40 Part 60.

Emission-Related Installation Instructions

Your certified emergency stationary engine has pre-set emission control systems or components that require no adjustment. Inspection and replacement of an emissions related component is required to be done so in accordance with the requirements cited in the United States Environmental Protection Agency Warranty Statement or can be arranged by contacting either your selling dealer or a Generac Authorized Warranty Service dealer, 1-800-333-1322 for the dealer nearest you. Failing to follow these instructions when installing a certified engine in a piece of non-road equipment violates federal law 40 CFR 1068.105 (b), subject to fines or penalties as described in the Clean Air Act.

Part No. 10000012792 Revision F (3/17)

For Stationary Emergency Compression-Ignition Generators

To receive information about how to make an emissions-related warranty claim and how to make arrangements for authorized repairs, call 1-800-333-1322 or go to ***www.generac.com***.

This page intentionally left blank.

Part No. 0J5019 Rev. W 05/20/2019
©2019 Generac Power Systems, Inc.
All rights reserved
Specifications are subject to change without notice.
No reproduction allowed in any form without prior written consent from Generac Power Systems, Inc.

Generac Power Systems, Inc.
S45 W29290 Hwy. 59
Waukesha, WI 53189
1-888-GENERAC (1-888-436-3722)
www.generac.com