Owner's/Installation Manual

100A Smart Management Module (SMM)

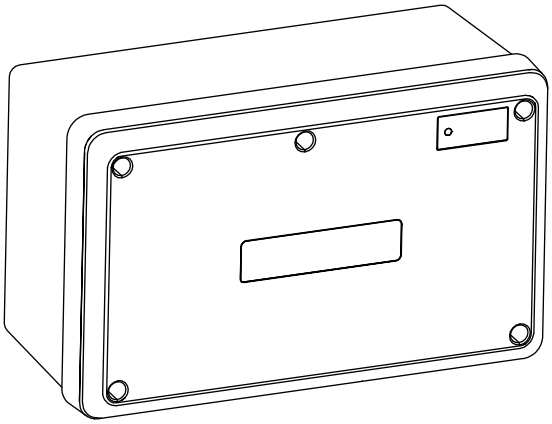

MODEL: G007006-0

DATE PURCHASED:_____

⚠WARNING

Loss of life. This product is not intended to be used in a critical life support application. Failure to adhere to this warning could result in death or serious injury.

(000209b)

WWW.GENERAC.COM
1-888-GENERAC
(1-888-436-3722)

Para español , visita: http://www.generac.com/service-support/product-support-lookup

Pour le français, visiter : http://www.generac.com/service-support/product-support-lookup

C ETL LISTED

SAVE THIS MANUAL FOR FUTURE REFERENCE

⚠WARNING

CANCER AND REPRODUCTIVE HARM

www.P65Warnings.ca.gov.

(000393a)

Table of Contents

Section 1: Introduction and Safety

Introduction 1
Read This Manual Thoroughly 1
Safety Rules 1
How to Obtain Service 1
General Hazards 1

Section 2: General Information and Setup

Load Management Options 3
Application Considerations 3
Smart Management Module (SMM) 3
SMM and Carton Contents 4
Setting Lockout 5
Jumper Locations 5

Section 3: Installation, Tests, and Troubleshooting

Electrical Specifications 9
Enclosure Specifications 9
Remove Contents from Carton 9
Tools Needed For Installation 9
Mounting Instructions 9
Connections 10
Setting Priorities 11
Tests 11
Utility Test 11
Installation Summary 11
Troubleshooting 12

This page intentionally left blank.

Section 1: Introduction and Safety

Introduction

Thank you for purchasing a Generac Smart Management Module (SMM). SMMs are designed to work together to prevent a home standby generator from being overloaded by large appliance loads. The modules require no control wires, and provide a cost effective, quick installation. Use of up to eight modules is available, allowing protection of the home and necessary appliances.

The information in this manual is accurate based on products produced at the time of publication. The manufacturer reserves the right to make technical updates, corrections, and product revisions at any time without notice.

Read This Manual Thoroughly

WARNING

Consult Manual. Read and understand manual completely before using product. Failure to completely understand manual and product could result in death or serious injury. (000100a)

If any section of this manual is not understood, contact the nearest Independent Authorized Service Dealer (IASD) or Generac Customer Service at 1-888-436-3722 (1-888-GENERAC), or visit ***www.generac.com*** for starting, operating, and servicing procedures. The owner is responsible for proper maintenance and safe use of the unit.

SAVE THESE INSTRUCTIONS for future reference. This manual contains important instructions that must be followed during placement, operation, and maintenance of the unit and its components. Always supply this manual to any individual that will use this unit, and instruct them on how to correctly start, operate, and stop the unit in case of emergency.

Safety Rules

The manufacturer cannot anticipate every possible circumstance that might involve a hazard. The alerts in this manual, and on tags and decals affixed to the unit, are not all inclusive. If using a procedure, work method, or operating technique that the manufacturer does not specifically recommend, verify that it is safe for others and does not render the equipment unsafe.

Throughout this publication, and on tags and decals affixed to the unit, DANGER, WARNING, CAUTION, and NOTE blocks are used to alert personnel to special instructions about a particular operation that may be hazardous if performed incorrectly or carelessly. Observe them carefully. Alert definitions are as follows:

DANGER

Indicates a hazardous situation which, if not avoided, will result in death or serious injury.

(000001)

WARNING

Indicates a hazardous situation which, if not avoided, could result in death or serious injury.

(000002)

CAUTION

Indicates a hazardous situation which, if not avoided, could result in minor or moderate injury.

(000003)

NOTE: Notes contain additional information important to a procedure and will be found within the regular text of this manual.

These safety alerts cannot eliminate the hazards that they indicate. Common sense and strict compliance with the special instructions while performing the action or service are essential to preventing accidents.

How to Obtain Service

When the unit requires servicing or repairs, contact Generac Customer Service at 1-888-GENERAC (1-888-436-3722) or visit ***www.generac.com*** for assistance.

When contacting Generac Customer Service about parts and service, always supply the complete model and serial number of the unit as given on its data decal located on the unit. Record the model and serial numbers in the spaces provided on the front cover of this manual.

General Hazards

DANGER

Electrocution. Turn utility and emergency power supplies to OFF before connecting power source and load lines. Failure to do so will result in death or serious injury. (000116)

This page intentionally left blank.

Section 2: General Information and Setup

Load Management Options

Load management systems are designed to work together to avoid a generator from being overloaded by large appliance loads. Options include:

- Smart Management Modules (SMMs)
- Smart A/C Module (SACM)—standard in single-phase 100–800 amp RTS or RXS transfer switches.

These options can be used in conjunction or separately.

Application Considerations

Generator overload condition is determined by generator frequency. Loads are shed when frequency drops below a preset value for a predetermined time.

A SMM can be used individually or in conjunction with a SACM to manage a combined total of eight loads.

- SACM inputs 1–4 have fixed priorities of 1–4, respectively. SMM's can be individually set to priorities 1–8.
- To reduce loads returned to the generator all at once, it is best to set SMM priorities to follow after the last HVAC load has returned. This allows the generator to accept loads gradually, reducing the potential for additional nuisance load shed events.
- A SMM can share a priority with an A/C priority on the SACM provided the generator is sized to handle the combined surge load from both appliances.
- Sharing priorities can allow up to 12 loads to be managed in a correctly sized system.

In any combination of modules, recovery times after a loss of utility power or shutdown due to overload are shown in ***Table 2-1***.

NOTE: For digital thermostats where a 24 VAC thermostat wire is not available, a SMM must be used to break the power at the HVAC load itself.

Smart Management Module (SMM)

Any 240V loads up to 100A (resistive, 90A inductive), including central air conditioners, can be managed using a SMM. The system can accommodate up to eight individual SMMs.

NOTE: SMMs are self-contained and have individual built-in controllers.

Table 2-1. Priority Settings

Priority	Recovery Time	SACM	SMM
1	5 minutes	Yes	Yes
2	5 minutes 15 seconds	Yes	Yes
3	5 minutes 30 seconds	Yes	Yes
4	5 minutes 45 seconds	Yes	Yes
5	6 minutes	NA	Yes
6	6 minutes 15 seconds	NA	Yes
7	6 minutes 30 seconds	NA	Yes
8	6 minutes 45 seconds	NA	Yes

SMM and Carton Contents

Priority Dial (A)—Sets module priority.

NOTE: PRIORITY MUST BE DIFFERENT for each module in an installation. Priority sets the order in which loads recover from a load shed event. Recovery time from a load shed event is five minutes for Priority 1. Each priority after Priority 1 waits an additional 15 seconds after the initial recovery time. See ***Table 2-1***.

Lockout Switch (B)—Enables or disables lockout function. Switch positions are LOCKOUT LOAD ON GENERATOR (enabled) and LOCKOUT DISABLED. See ***Table 2-2***.

NOTE: Recovery time is based on priority dial settings. See ***Table 2-1***.

Test Button (C)—Disables contactor output for a specified time.

LED (D)—Provides module status. See ***Table 2-3***.

Contactor (E)—Normally OPEN. If generator begins to overload, the contactor opens to take load off generator power. See ***Connections***.

Mounting Holes (F)—Internal enclosure mounting holes provide clean and sturdy mounting.

Directional Arrows (G)—Provided for mounting purposes.

Priority Decal (H)—Provided for recording priority of each module in installation. Install on electrical panel.

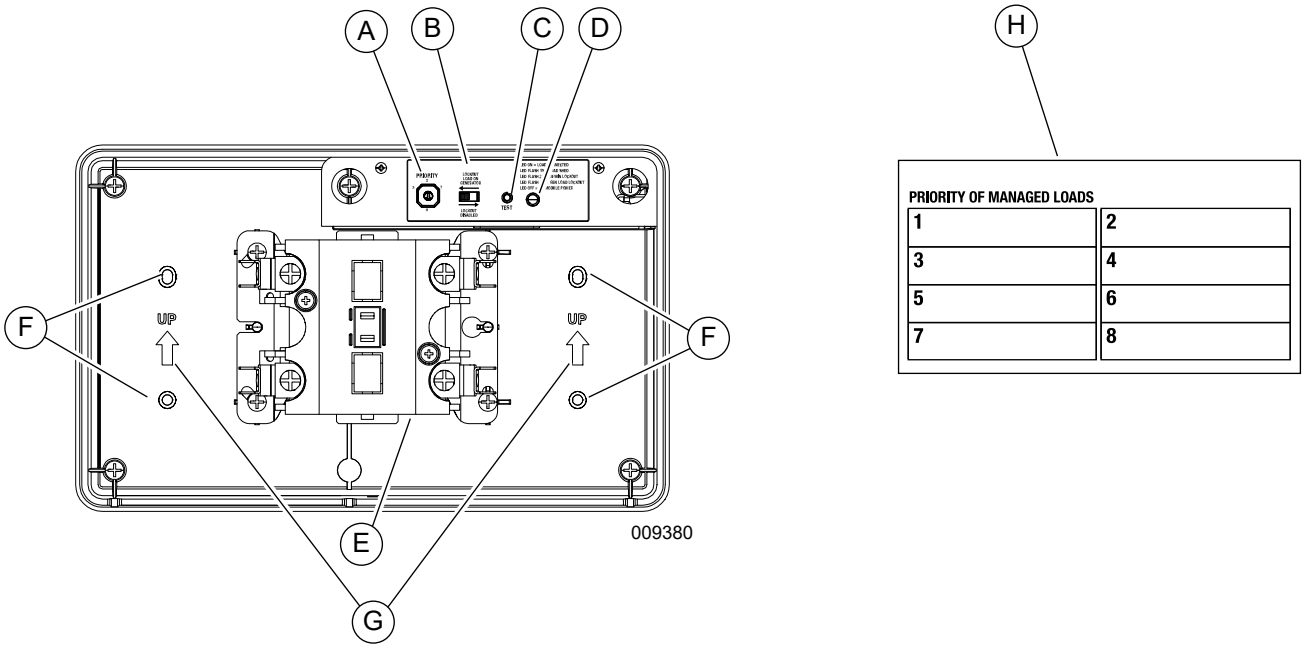

Figure 2-1. SMM Features and Controls

Setting Lockout

SMMs are equipped with a lockout provision. The SMM can be set to enable lockout mode if load is identified as non-essential and does NOT need to operate on backup power during generator overload. Load can be an entire subpanel of multiple branch circuits.

Proceed as follows to set SMM to enable standard lockout mode:

1. See ***Figure 2-2***. Slide lockout switch (1) to LOCKOUT LOAD ON GENERATOR.
2. Set mode selector jumper (4) on the control board as directed in ***Jumper Locations***.

Jumper Locations

See ***Figure 2-2***. The SMM control board is equipped with two movable jumpers (2). Jumper locations are indicated on the diagram:

- (3) Frequency Jumper
- (4) Mode Selector Jumper (identified on control board as “Lock Out Jumper”)

The frequency jumper is factory set at the 60 Hz position. The mode selector jumper is factory set at position “A”, which is considered standard for most installations.

Jumpers should remain in place except when operating the unit under either or both of the following conditions:

- Operating the unit at 50 Hz requires moving frequency jumper to “50 Hz” position.
- For installations in areas with unstable utility power, set mode selector jumper to position “B”.

To move a jumper:

1. Remove power.
2. Grasp jumper and pull straight up until it clears the pins.
3. Move jumper to new location and press it gently onto the pins until seated.

NOTE: To avoid bending or breaking pins, do not rock jumper, use excessive force, or pull sideways to remove it from the SMM control board.

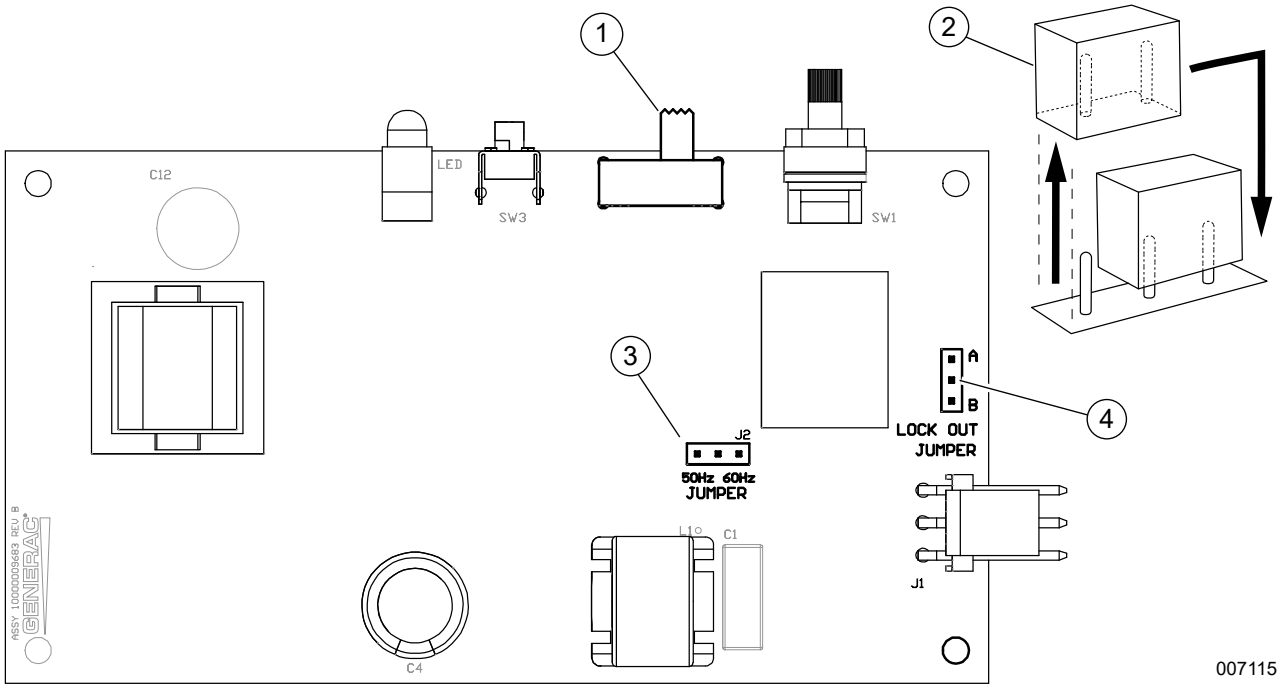

Figure 2-2. Jumper Locations

Table 2-2. Lockout Switch Settings

Lockout Switch Setting	Mode Selector Jumper Position	Mode	Function
LOCKOUT LOAD ON GENERATOR	A	Generator	Module sheds load and does not reconnect until utility returns. This setting is considered standard for most installations.
LOCKOUT LOAD ON GENERATOR	B	Generator	Module sheds load and does not reconnect until utility returns. This setting is recommended for installations in areas with unstable utility power.
LOCKOUT LOAD ON GENERATOR	A or B	Utility	Power is available on module output.
LOCKOUT DISABLED	A or B	Generator	Module operates with standard load shed logic. See ***Table 2-1*** for more information.
LOCKOUT DISABLED	A or B	Utility	Power is available on module output.
NOTE: *Duration of Return to Utility timer is longer in Mode B.*			

Table 2-3. LED States

State	LED State	Mode	Note
Shed	1 second flash (1 On – 1 Off)	Generator	Module detected an overload and shed its load. This state only occurs in generator mode, or during a first time utility power-up for five minutes of initial operation.
Lockout (30 minutes)	3 second flash (3 On – 3 Off)	Generator	Module detected an overload while trying to recover from a shed situation. Operation is disabled for 30 minutes. This state only occurs in generator mode.
Lockout Switch Active	6 second flash (6 On – 6 Off)	Generator	Module output is disabled and there is no power to the appliance while in generator mode and generator is overloaded. Lockout switch must be ON. See ***Table 2-2***.
Lockout Switch Active	ON	Utility	Lockout switch operates in generator mode only. It has no function in utility mode. LED is solid, indicating load is connected. Lockout switch must be ON. See ***Table 2-2***.
Normal	ON	Generator or Utility	Indicates appliance has power. This is the default in utility mode. It is the normal operating state in generator mode when an overload is not detected.
Test	1 second flash	Generator or Utility	Test button triggers a typical shed condition and overrides all other states except generator lockout switch ACTIVE state. **NOTE:** Actual test time varies depending on SMM priority setting. Use the following formula to calculate test time: **Time = (P-1) x 15 seconds, where P represents priority setting.** Example: SMM Priority 6 test time = (6-1) x 15 seconds, or 75 seconds.

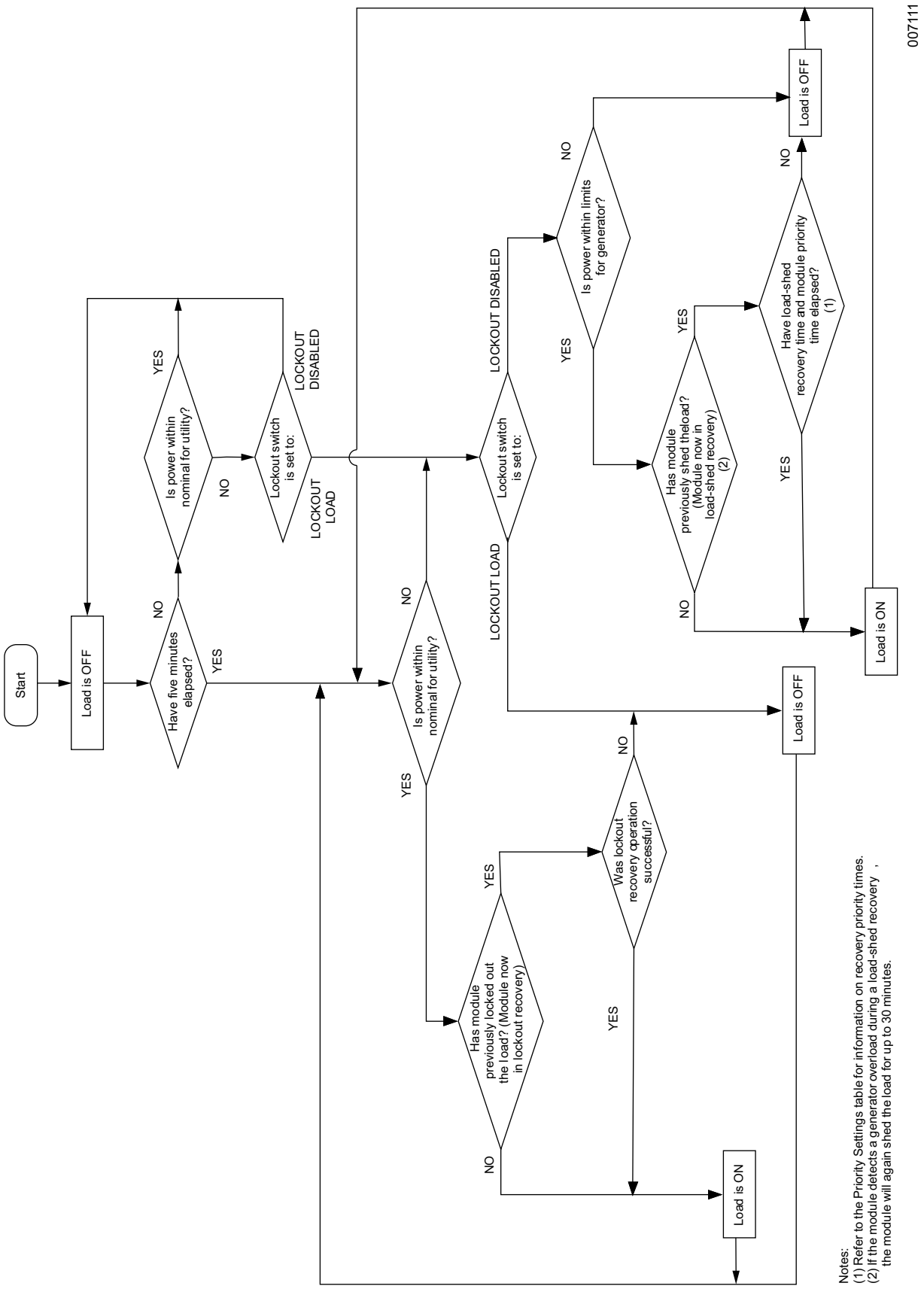

Figure 2-3. SMM Sequence of Operations

This page intentionally left blank.

Section 3: Installation, Tests, and Troubleshooting

Electrical Specifications

Input voltage	240 VAC
Current rating	100A resistive, 90A inductive
Locked rotor amp rating	540A
Motor rating	15 HP
Contactor coil voltage	240 VAC

Enclosure Specifications

Enclosure	Type 3R
Temperature	-22 to 122 °F (-30 to 50 °C)

Remove Contents from Carton

Proceed as follows to remove contents from carton:

1. Open carton.
2. Remove and verify carton contents:
   - SMM
   - Priority decal
   - Owner/installation manual

NOTE: Contact Generac Customer Service if any of these items are missing.

3. Retain carton for mounting template.
4. Contact the place of purchase with unit model number to report any missing carton contents.
5. Record date of purchase on front cover of this manual.

Tools Needed For Installation

- Power drill and suitable drill bit
- Phillips and flat head screwdrivers
- Mounting screws or wall anchors
- Electrical materials
- Voltmeter to indicate voltage presence

NOTE: Use the Digital Multimeter (DMM) LowZ low input impedance setting to collect accurate voltage measurements. LowZ eliminates the possibility of inaccurate ghost voltage readings, also known as phantom voltage or stray voltage readings. See DMM manufacturer's literature for additional information.

Mounting Instructions

DANGER

Electrocution. Turn utility and emergency power supplies to OFF before connecting power source and load lines. Failure to do so will result in death or serious injury. (000116)

Recommended installation is near the electrical panel or appliance/load. The enclosure has a NEMA 3R rating and can be mounted indoors or outdoors. It provides a degree of protection against rain and sleet and is undamaged by the formation of ice on the enclosure.

1. Turn off both UTILITY (NORMAL) and EMERGENCY (STANDBY) power supplies.
2. Select mounting location (near electrical panel, appliance, or load to be managed).
3. See ***Figure 2-1***. Hold SMM enclosure against mounting surface with arrows (G) pointing up, and mark or drill four mounting holes (F). See ***Figure 3-1*** for mounting dimensions if necessary.

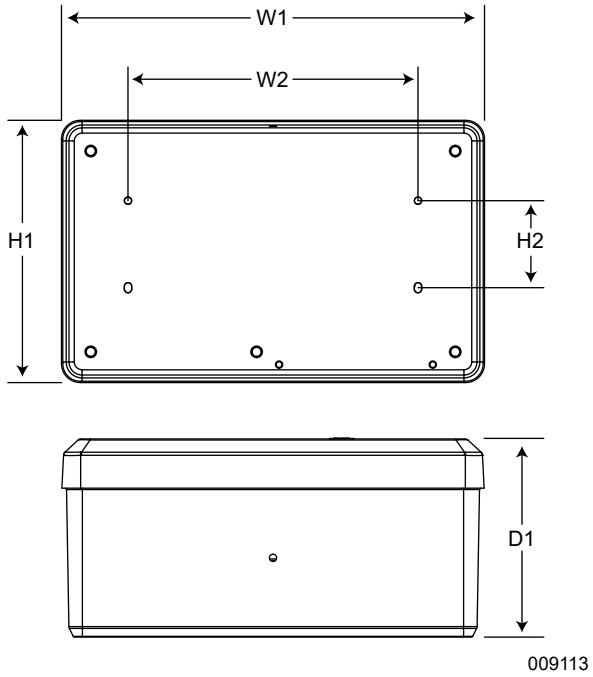

Figure 3-1. Mounting Dimensions

Height (in/mm)	H1	7.0 / 178.5
	H2	2.4 / 61.0
Width (in/mm)	W1	11.4 / 289.4
	W2	7.8 / 200.0
Depth (in/mm)	D1	5.3 / 136.9

4. Install SMM enclosure to mounting surface using appropriate mounting screws or wall anchors.

Connections

DANGER

Electrocution. Turn utility and emergency power supplies to OFF before connecting power source and load lines. Failure to do so will result in death or serious injury. (000116)

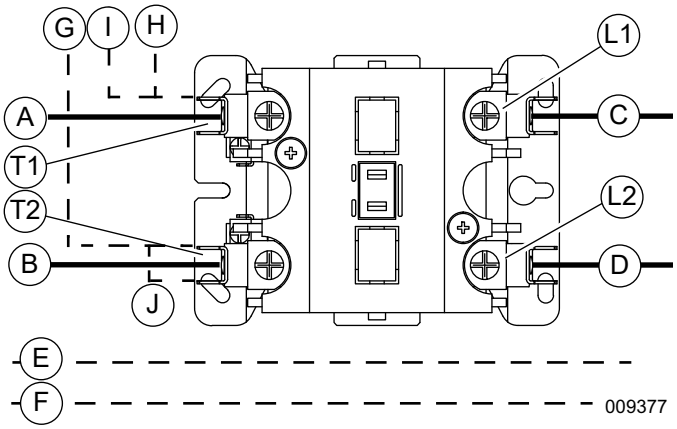

Figure 3-2. Wiring Diagram

Legend	
A	Red (240 VAC - Line)
B	Black (240 VAC - Line)
C	Red (240 VAC - Load)
D	Black (240 VAC - Load)
E	White - Neutral (as required)
F	Green - Ground (as required)
G	Black - Factory (PCB)
H	Red - Factory (PCB)
I	Blue - Factory (PCB)
J	Blue - Factory (Jumper)

1. Turn off both UTILITY (NORMAL) and EMERGENCY (STANDBY) power supplies before connecting power source and load lines to transfer switch and SMM.

NOTE: Suitable conduit fittings must be installed in knockout openings when running supply and load wires.

NOTE: Use at least 167 °F (75 °C) rated wire and gauge per installation instructions. See ***Table 3-1*** for recommended wire size based on load current.

Table 3-1. Recommended Wire Sizes

Temperature rating of conductor: 167 ºF (75 ºC)	
Conductor types: RHW, THHW, THW, THWN, XHHW, USE, ZW	
Size AWG	Maximum Current Rating
8	50A
6	65A
4	85A
2	115A
1	130A
NOTE: Do not put more than three conductors in raceway, cable, or earth.	

2. Run line supply wires per applicable NEC code articles for wiring method selected.
3. Run load wires per applicable NEC code articles for wiring method selected.
4. See ***Figure 3-2***. Connect line supply wiring (A, B) to line side of SMM contactor field terminals. Tighten field terminals to 60 **in-lbs** (6.8 Nm).
5. Connect load supply wiring (C, D) to load side of SMM contactor field terminals.

NOTE: If neutral (E) and ground (F) wires are included, connect inside SMM using a listed termination device.

The unit is now ready to configure, apply power, and perform testing.

Setting Priorities

High priority 240 VAC loads should be set to the highest priorities so those loads recover first in the event of generator overload.

NOTE: The highest priority, and first load to activate, is Priority 1. The last load to activate is Priority 8.

Setting priority determines timing for three scenarios:

- Order in which loads recover
- Delay time until power returns during an outage
- Delay time for post load shed recovery

An example configuration is shown below. Configurations will vary depending on customer prioritization of loads:

Priority 1: Baseboard heat	Priority 5: Non-essential circuits
Priority 2: Air conditioner	Priority 6: Pool pump or hot tub
Priority 3: Range	Priority 7: Other circuits
Priority 4: Clothes Dryer	Priority 8: Other circuits

1. Set the priority of each SMM as desired (using the example configuration for reference).
2. Apply priority decal in a suitable location on electrical panel to record chosen priority designations.
3. Record priorities on decal.

Tests

Utility Test

1. Turn utility power ON and enable all module feeding circuits.
2. Verify LED begins to flash at one second intervals.
3. All contactors will close after five minutes. LED will illuminate and remain ON.

NOTE: The five-minute delay allows magnetism to dissipate from the air conditioner compressor. This promotes easier starting and eliminates the potential for reverse compressor operation.

Installation Summary

- Install cover on electrical panel.
- Install covers on modules.

Troubleshooting

See ***Table 3-2*** for troubleshooting problems, causes, and corrections.

Table 3-2. Troubleshooting

Problem	Cause	Correction
Load not powered; LED is OFF	Circuit breaker disabled.	Enable circuit breaker.
Load not powered; LED is OFF	MLCB disabled and generator OFF.	Enable MLCB if utility is present or verify generator operation if outage.
Load not powered; LED flashing 1 second interval	Generator power just applied to unit. Utility power just applied to unit. Generator was overloaded and shed occurred.	Wait five minutes plus the priority time delay (see ***Table 2-1***) for unit to enable output.
Load not powered; LED flashing 3 second interval	This load overloaded the generator while attempting recovery from a shed. It is in a 30 minute lockout wait period.	Wait 30 minutes from lockout for unit to attempt to re-apply load. Review all loads enabled in household. The generator may experience another overload condition when this load is enabled. Disable some loads to prevent generator overload from recurring.
Load not powered; LED flashing 6 second interval	The lockout switch is enabled and the unit is on generator power.	During installation, it was determined that this load will be disabled during generator operation to prevent generator overload. Contact IASD for details.

This page intentionally left blank.

This page intentionally left blank.

Part No. 10000041226 Rev. A 03/26/19
©2019 Generac Power Systems, Inc.
All rights reserved
Specifications are subject to change without notice.
No reproduction allowed in any form without prior written consent from Generac Power Systems, Inc.

Generac Power Systems, Inc.
S45 W29290 Hwy. 59
Waukesha, WI 53189
1-888-GENERAC (1-888-436-3722)
www.generac.com