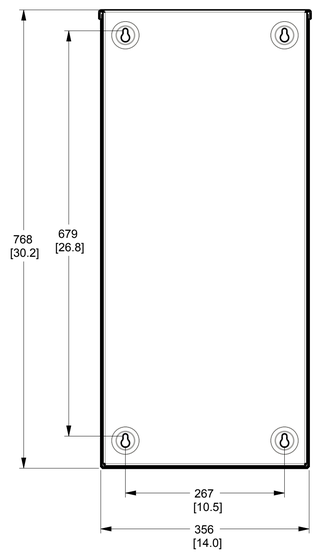

TRANSFER SWITCH
(IF SUPPLIED)

MOUNTING TO CONCRETE PAD

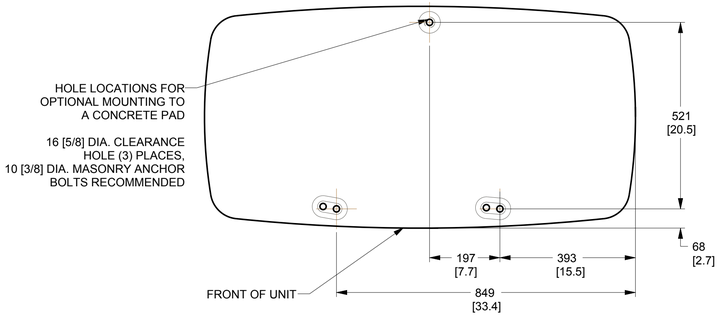

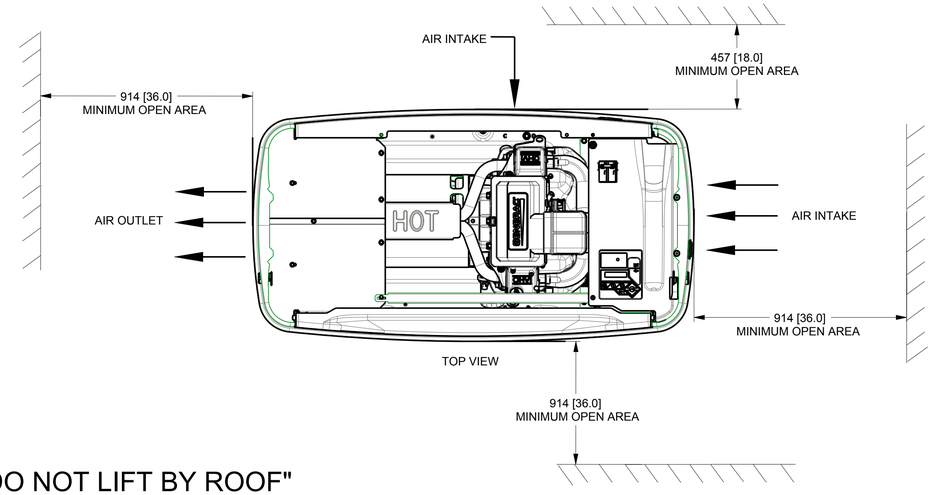

"DO NOT LIFT BY ROOF"

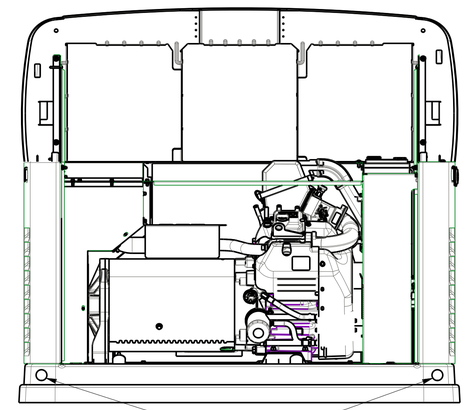

LIFTING HOLES 4 CORNERS: ∅ 30 [∅ 1.2]
- MUST BE LIFTED WITH STEEL RODS
- RECOMMENDED LIFTING ROD SIZE: ∅ 25 [∅ 1.0]

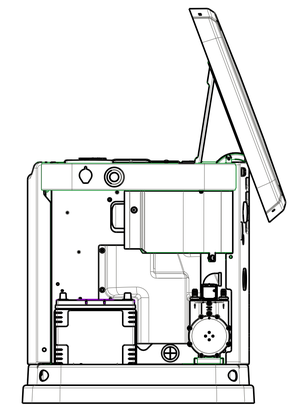

RIGHT VIEW
INTAKE PANEL REMOVED

MAIN AC/CONTROL WIRING HOLE FOR 1 1/4" CONDUIT
MAIN AC/CONTROL WIRING HOLE FOR 3/4" CONDUIT
(-REMOVE FACTORY PLUGS AND DISCARD
-CLOSE ANY UNUSED HOLE WITH A NEMA
3R RATED PLUG (FIELD SUPPLIED))

AUXILIARY SHUTDOWN SWITCH

WIRELESS MODULE

FUEL INLET : 1/2" NPT (9-11kW)
: 3/4" NPT (16-22kW)
REQUIRED FUEL PRESSURE : NATURAL GAS : 3.5-7" WATER COLUMN
LIQUID PROPANE (VAPOR) : 10-12" WATER COLUMN

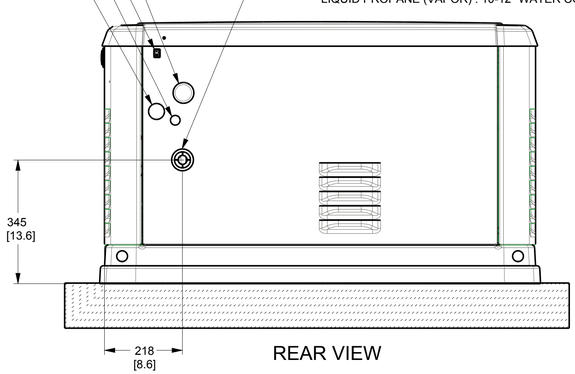

REAR VIEW

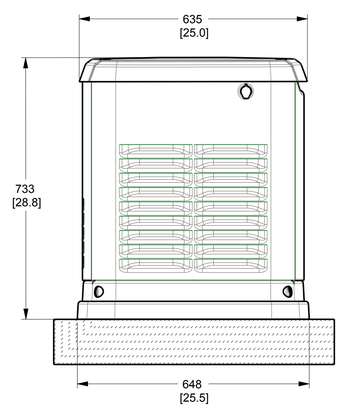

LEFT SIDE VIEW

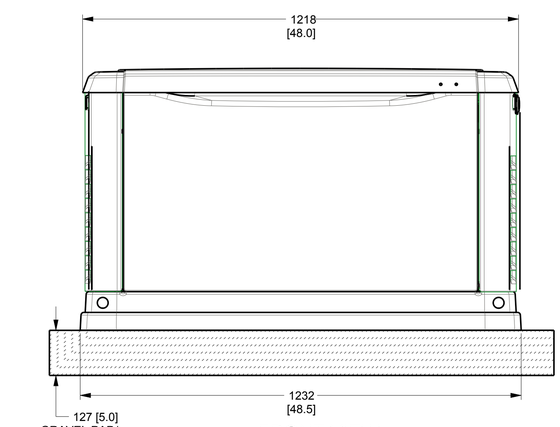

FRONT VIEW

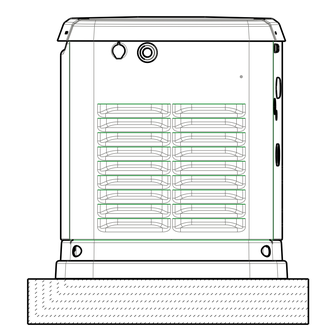

RIGHT SIDE VIEW

ALL DIMENSIONS IN:
MILLIMETERS [INCHES]

DRAWING CREATED FROM PRO/ENGINEER
3D FILE. ECO MODIFICATION TO BE
APPLIED TO SOLID MODEL ONLY.

INSTALLATION DRAWING

FIRST USE: G0070432

ELECTRONICALLY APPROVED
INSIDE WINDCHILL

GENERAC

TITLE
INSTALL HSB GENERATOR WM 60HZ

ISSUE DATE: 12/19/16				
SIZE B	CAGE NO N/A	DWG NO 10000010258		REV B
SCALE NTS	WT-KG N/A		SHEET 1 of 1	