0L2833

SCHEMATIC – DIAGRAM

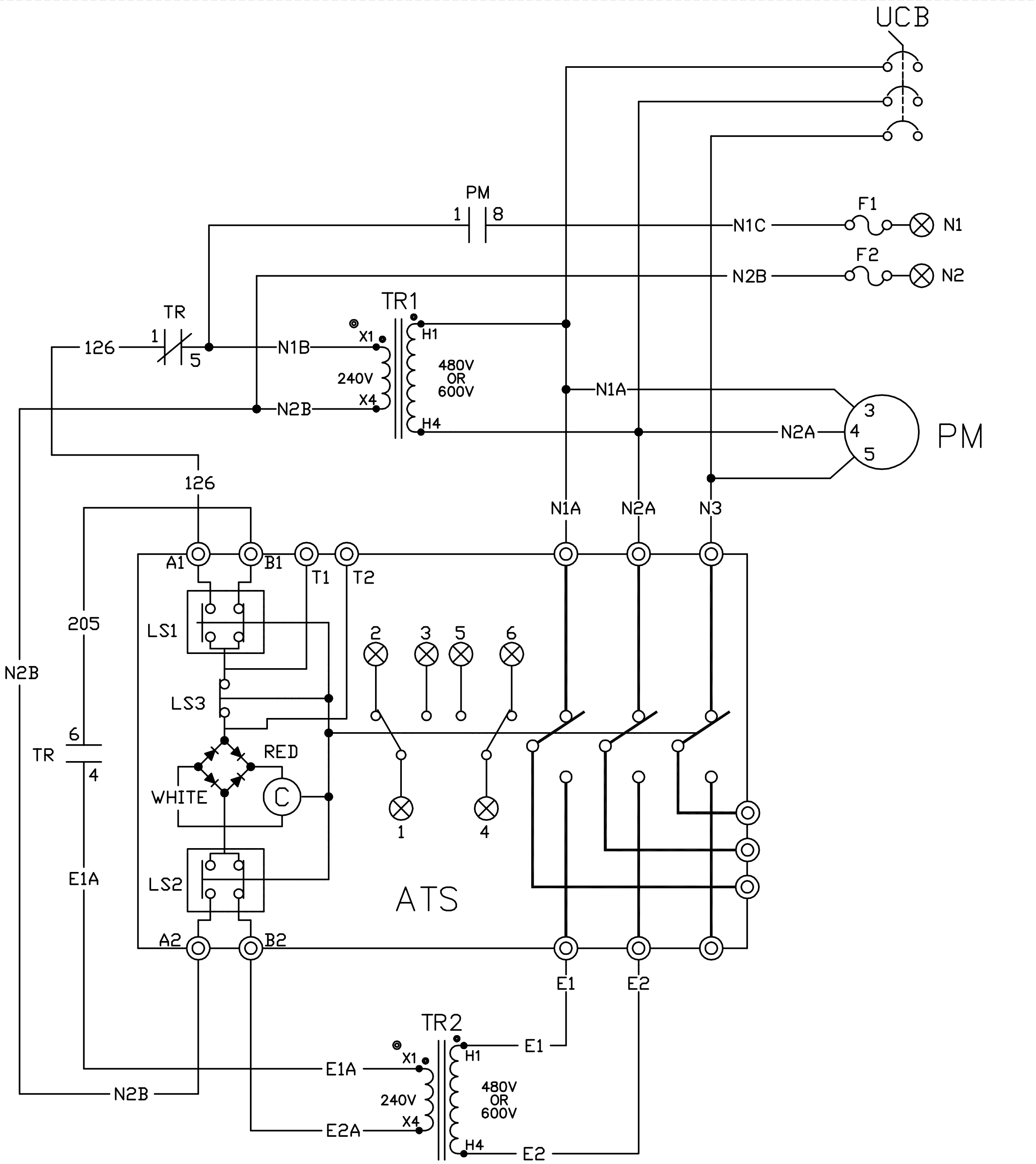

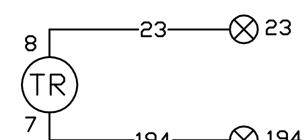

LEGEND

ATS – TRANSFER SWITCH CONTACTOR
C – CONTACTOR ACTUATING COIL
PM – POWER MONITOR, 3 PHASE UTILITY
TR – RELAY, TRANSFER
TS – TERMINAL STRIP (CUSTOMER CONNECTION)
LS1,LS2,LS3 – LIMIT SWITCHES, ACTUATOR
F1,F2 – FUSE 5A SENSING
TR1,TR2 – TRANSFORMER STEP DOWN
UCB – UTILITY CIRCUIT BREAKER

NOTES:

1.) ALL CONTACTS SHOWN WITH TRANSFER SWITCH IN UTILITY POSITION.

WIRING – DIAGRAM

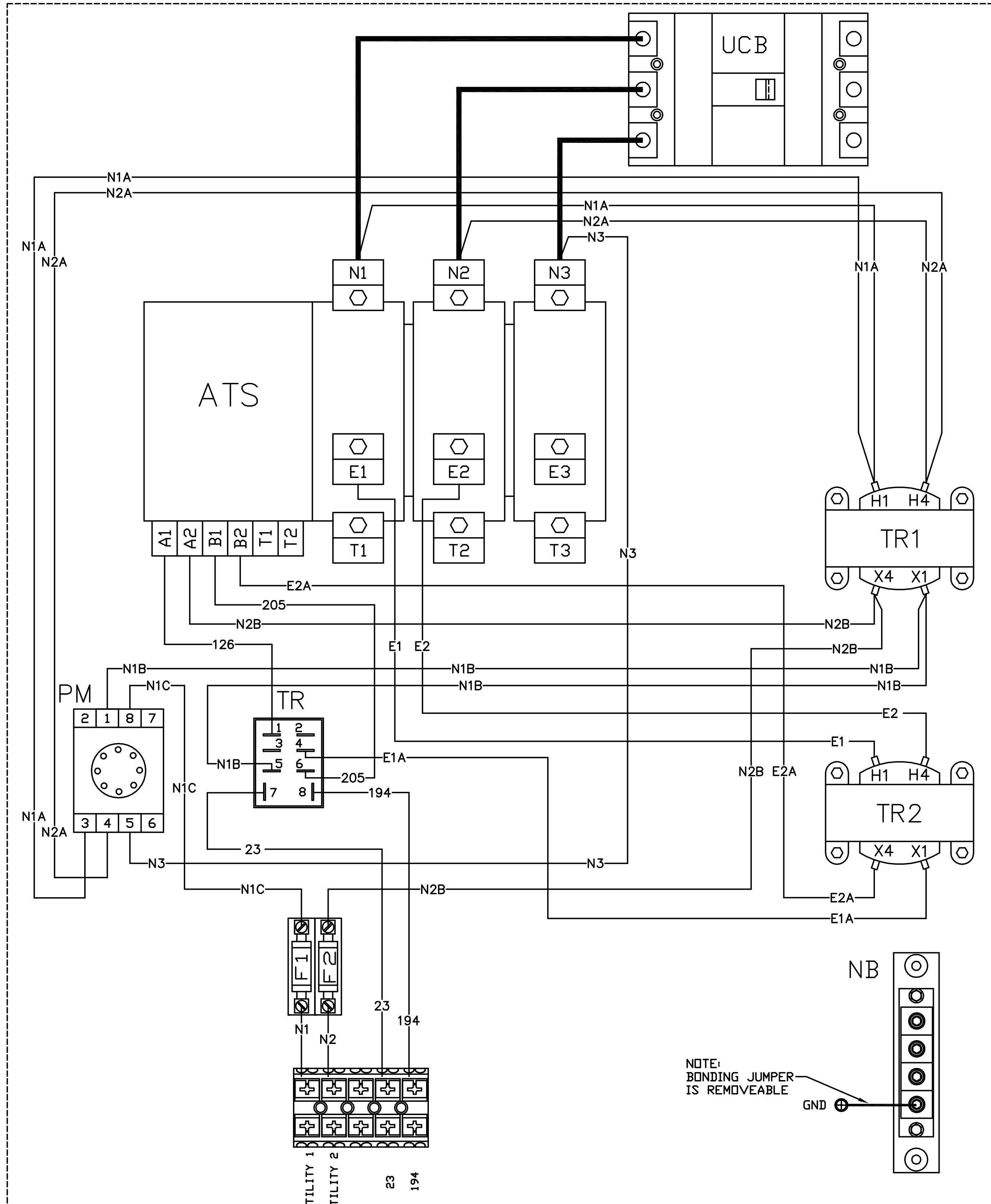

08/25/15	"A"	PRODUCTION RELEASE

GENERAC POWER SYSTEMS OWNS THE COPYRIGHT OF THIS DRAWING WHICH IS SUPPLIED IN CONFIDENCE AND MUST NOT BE USED FOR ANY PURPOSE OTHER THAN FOR WHICH IT IS SUPPLIED WITHOUT THE EXPRESS WRITTEN CONSENT OF GENERAC POWER SYSTEMS.

© GENERAC POWER SYSTEMS 2001

EST. WT.
FINAL WT.

DO NOT SCALE

ALL DIMENSIONS AND TOLERANCING PER ASME Y14.5M-1994

UNLESS OTHERWISE SPECIFIED :
ALL XX DIM ---- ±0.4 MM
ALL XX.X DIM --- ±0.4 MM
ALL XX.XX DIM -- ±0.15 MM
ALL ANGLES ---- ±1°

DRAWING TITLE
SCHEMATIC/WIRING DIAGRAM
100-400 AMP 480VAC

MATERIAL

DWN MJB | DATE 6/18/15 | MFG N/A | DATE
CHKD | DATE | APPD | DATE
RELEASED FOR PRODUCTION | BY | DATE

GENERAC POWER SYSTEMS
Waukesha
P.O. BOX 8
WAUKESHA, WIS. 53187

FILE NAME 0L2833.DWG | SIZE D
SCALE 1 = 1 | FIRST USE RTS 3PH
DWG NO. 0L2833 | REV A