0L2833

SCHEMATIC – DIAGRAM

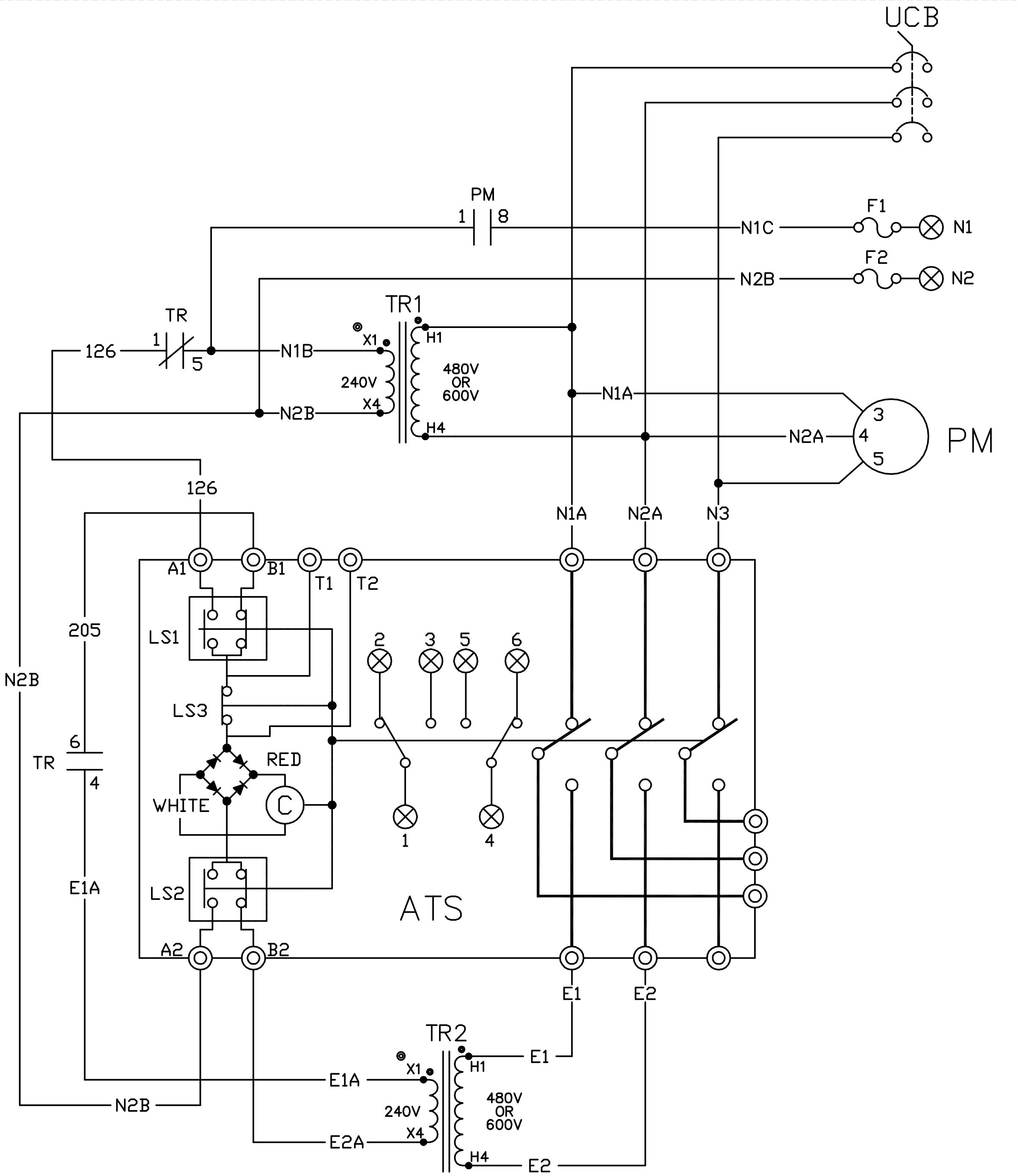

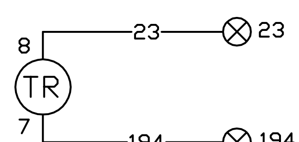

LEGEND

ATS – TRANSFER SWITCH CONTACTOR
C – CONTACTOR ACTUATING COIL
PM – POWER MONITOR, 3 PHASE UTILITY
TR – RELAY, TRANSFER
TS – TERMINAL STRIP (CUSTOMER CONNECTION)
LS1,LS2,LS3 – LIMIT SWITCHES, ACTUATOR
F1,F2 – FUSE 5A SENSING
TR1,TR2 – TRANSFORMER STEP DOWN
UCB – UTILITY CIRCUIT BREAKER

NOTES:

1.) ALL CONTACTS SHOWN WITH TRANSFER SWITCH IN UTILITY POSITION.

WIRING – DIAGRAM

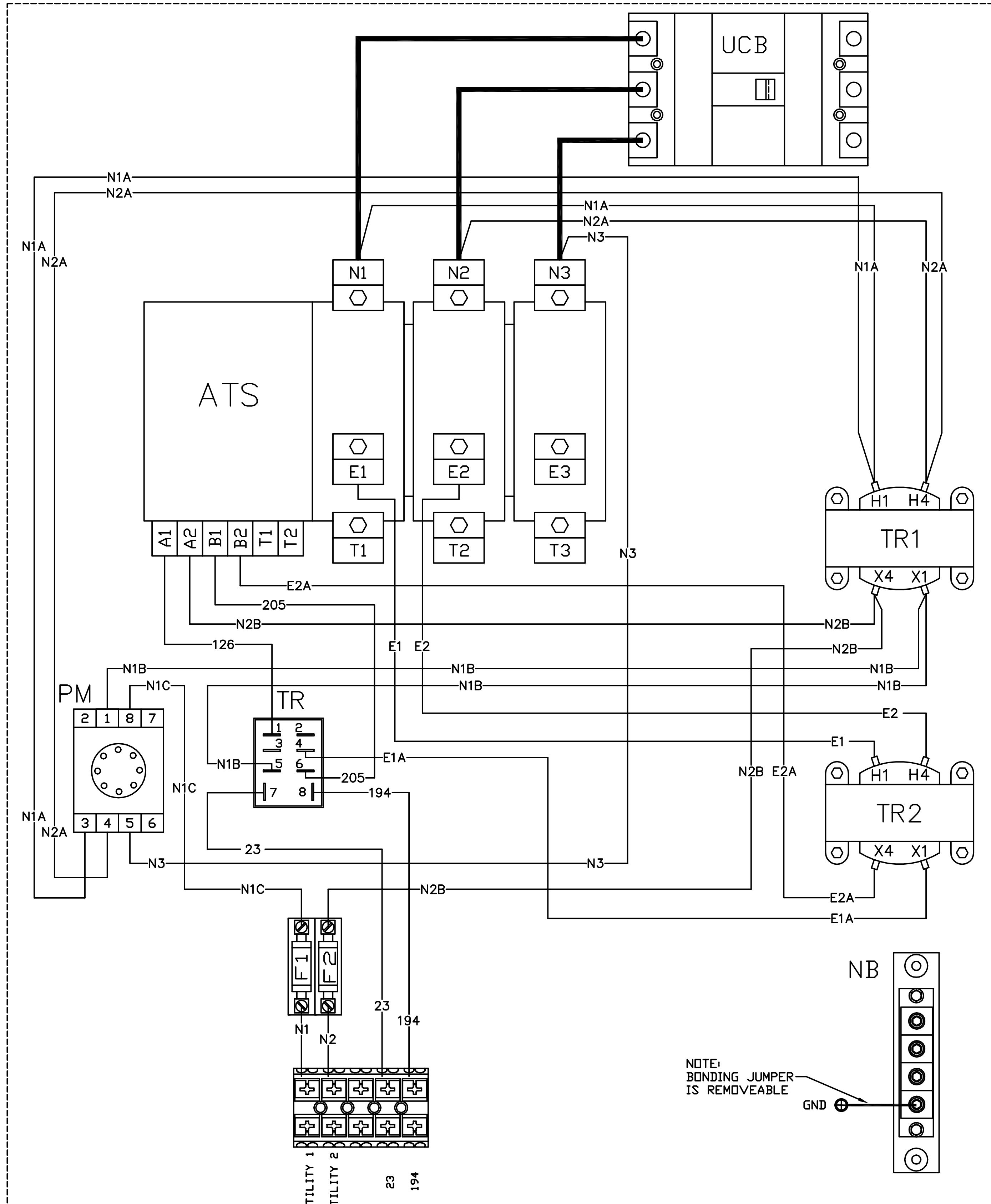

GENERAC POWER SYSTEMS OWNS THE COPYRIGHT OF THIS DRAWING WHICH IS SUPPLIED IN CONFIDENCE AND MUST NOT BE USED FOR ANY PURPOSE OTHER THAN FOR WHICH IT IS SUPPLIED WITHOUT THE EXPRESS WRITTEN CONSENT OF GENERAC POWER SYSTEMS.
© GENERAC POWER SYSTEMS 2001

08/25/15	"A"	PRODUCTION RELEASE

EST. WT.
FINAL WT.
DO NOT SCALE
ALL DIMENSIONS AND TOLERANCING PER ASME Y14.5M-1994
UNLESS OTHERWISE SPECIFIED :
ALL XX DIM ---- ±0.4 MM
ALL XX.X DIM --- ±0.4 MM
ALL XX.XX DIM -- ±0.15 MM
ALL ANGLES ---- ±1°

DRAWING TITLE: SCHEMATIC/WIRING DIAGRAM 100-400 AMP 480VAC
MATERIAL
DWN: MJB | DATE: 6/18/15 | MFG: N/A | DATE
CHKD | DATE | APPD | DATE
RELEASED FOR PRODUCTION | BY | DATE

GENERAC POWER SYSTEMS
Waukesha
P.O. BOX 8
WAUKESHA, WIS. 53187

FILE NAME: 0L2833.DWG | SIZE: D
SCALE: 1 = 1 | FIRST USE: RTS 3PH
DWG NO.: 0L2833 | REV: A

1 2 3 4 5 6 7 8
A B C D E