GROUP EV

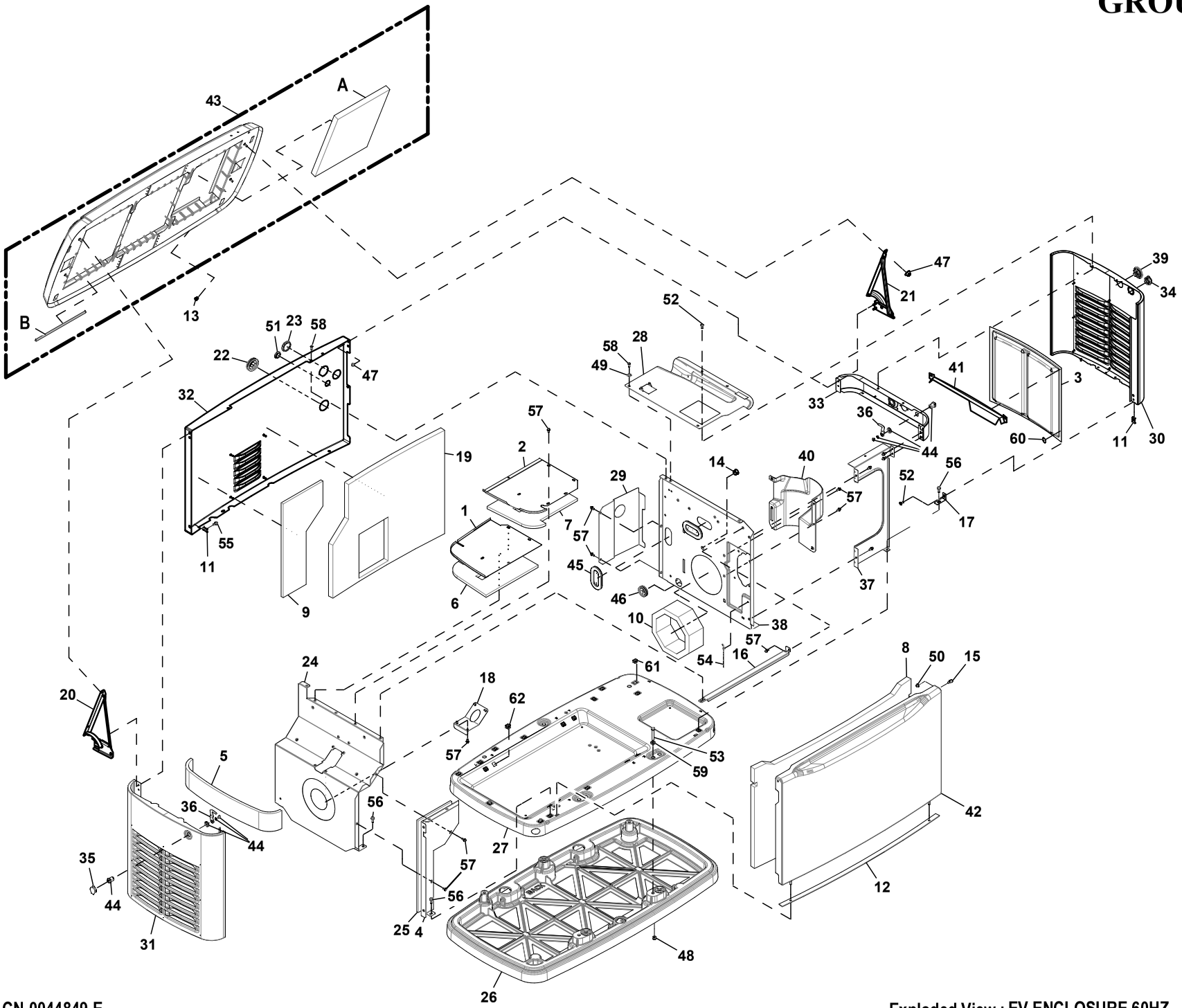

Revision : CN-0044849-E
Date : 3/5/21

Exploded View : EV ENCLOSURE 60HZ
Drawing No. : 10000017214

EXPLODED VIEW: EV ENCLOSURE 60HZ

DRAWING #: 10000017214

GROUP EV

ITEM	PART#	QTY.	DESCRIPTION
1	0G68110ST03	1	COVER, BACK EXHAUST ENCLOSURE
2	0G68120ST03	1	COVER, FRONT EXHAUST ENCLOSURE
3	0G7258	2	SCREEN - HSB LOUVERS
4	0G66230ST03	1	FRONT EXAUST SHIELD (16KW)
	0G74210ST03	1	FRONT EXHAUST SHIELD (9, 11, 20, 22KW, 15KW ECOGEN)
5	0G7775	1	FOAM, EXHAUST END PANEL
6	0G7776	1	FOAM, TOP BACK EXHAUST COVER
7	0G7778	1	FOAM, TOP FRONT EXHAUST COVER
8	A0000342586	1	INSULATION FRONT PANEL W/ PSA
9	0G7842	1	FOAM, BACK PANEL, MUFFLER COM
10	0G7880	1	FOAM DUCT ENGINE DIVIDER (9KW)
	0F8434	1	FOAM DUCT ENGINE DIVIDER (11KW)
	0F8847	1	FOAM DUCT ENGINE DIVIDER (16-22KW, 15KW ECOGEN)
11	0G7252	2	CLIP U M6-1.0
12	0G7890	1	GASKET, HSB DOOR SEAL
13	0G8131	1	PLUG 6.35 BLACK
14	0E1534	1	PLUG PLASTIC 0.687” (16-22KW, 15KW ECOGEN)
15	0G9386	2	SPACER 2008 HSB DOOR
16	0H71940ST03	1	CROSS SUPPORT HSB (9, 11KW)
	10000018921	1	ST03 CROSS SUPPORT COMMON BAR (16-22KW, 15KW ECOGEN)
17	10000004442	1	BRACKET L HSB
18	0J6184A	1	GASKET EXHAUST DIVIDER 2013 HSB (9, 11KW)
	0J7546A	1	GASKET EXHAUST PANEL (16KW)
	0J7546B	1	GASKET EXHAUST PANEL (20, 22KW, 15KW ECOGEN)
19	A0000341610	1	INSULATION BACK PANEL W/ PSA
20	10000004134	1	HINGE ASSY EXHAUST END
21	10000004126	1	HINGE ASSY INTAKE END
22	0J7724	1	GROMMET FUEL LINE 3/4"
23	0J9137	1	PLUG STEEL 1.750
24	0K3340EST03	1	EXHST DVDR PNL WLDNT (9, 11KW)
	0K3340BST03	1	EXHST DVDR PNL WLDNT (16KW)
	0K3340CST03	1	EXHST DVDR PNL WLDNT (20, 22KW, 15KW ECOGEN)
25	0G7843	1	FOAM, FRONT EXHAUST SHIELD (16KW)
	0K7663	1	FOAM EXHAUST FRONT PANEL (9, 11, 20, 22KW, 15KW ECOGEN)
26	0L2183	1	MOUNTING PAD
27	0L25310GN13	1	BASE HSB (BISQUE)
	0L25310GN14	1	BASE HSB (LIGHT GREY)
	0L25310GN19	1	BASE HSB (DARK GREY)
	0L2531AGN13	1	BASE ECOGEN HSB (BISQUE) (15KW ECOGEN)
28	0L2663AST03	1	CONTROLLER FASCIA 426/530 HSB (9, 11KW)
	0L2663BST03	1	CONTROLLER FASCIA 999 HSB (16-22KW, 15KW ECOGEN)
29	0L4359	1	SHIELD 426/530 FUEL REGULATOR (9, 11KW)
	0L4358	1	SHIELD, 999 FUEL REGULATOR (16-22KW, 15KW ECOGEN)
30	0L4445AAL13	1	WELDMENT INTAKE END PNL ALUM (BISQUE)
	0L4445AAL14	1	WELDMENT INTAKE END PNL ALUM (LIGHT GREY)
	0L4445AAL19	1	WELDMENT INTAKE END PNL ALUM (DARK GREY)
31	0L4449AAL13	1	WELDMENT EXHAUST END PNL ALUM (BISQUE)
	0L4449AAL14	1	WELDMENT EXHAUST END PNL ALUM (LIGHT GREY)
	0L4449AAL19	1	WELDMENT EXHAUST END PNL ALUM (DARK GREY)
32	10000016784	1	AL13 WELDMENT HSB BACK PNL AUX SW (BISQUE)
	10000016792	1	AL14 WELDMENT HSB BACK PNL AUX SW (LIGHT GREY)
	10000016793	1	AL19 WELDMENT HSB BACK PNL AUX SW (DARK GREY)
33	10000007128	1	ST03 WLDMNT BRCKT HSB TOP SUPPORT E-STOP
34	0L5111	1	LOCK CAP INTAKE
35	0L5112	1	LOCK CAP EXHAUST
36	A0000481250	2	LOCK PAWL
37	0L57890ST03	1	VERTICAL SUPPORT STRUCTURE (9, 11KW)
38	0L57930ST03	1	PANEL ENGINE DIVIDER 426 HSB (9KW)
	10000018800	1	ST03 ENGINE DIVIDER PANEL 530 HSB (11KW)
	10000013628	1	ST03 ENGINE DIVIDER PANEL 999 HSB AUX SW (16-22KW, 15KW ECOGEN)
39	0L5966	1	LENS HOLDER, W/GASKET
40	0L6156	1	INTAKE BAFFLE HSB
41	0L62580ST03	1	HSB INTAKE DEFLECTOR
42	0L6470BAL13	1	WELDMENT FRONT PANEL (BISQUE)
	0L6470BAL14	1	WELDMENT FRONT PANEL (LIGHT GREY)

EXPLODED VIEW: EV ENCLOSURE 60HZ

DRAWING #: 10000017214

GROUP EV

ITEM	PART#	QTY.	DESCRIPTION
	0L6470BAL19	1	WELDMENT FRONT PANEL (DARK GREY)
43	0L6732C	1	ROOF ASSY ALUMINUM BISQUE (BISQUE)
	0L6732A	1	ROOF ASSY ALUMINUM GREY (LIGHT GREY)
	0L6732B	1	ROOF ASSY ALUMINUM IND GREY (DARK GREY)
A	A0000335102	3	INSULATION ROOF PANEL W/ PSA
B	0L6368	10.5FT	GASKET, EXTRUDED TRIM
44	A0000481249	2	LOCK ASM 1/4 TURN CAM
45	0D3472	2	GROMMET OVAL 31.75 X 50.8
46	0E1330	1	GROMMET, 38.1 DIA. CROSS SLIT
47	0D3700	8	NUT FLANGE M6-1.0 NYLOK
48	G022241	4	NUT HEX 3/8-16 STEEL
49	0A1658	1	WASHER LOCK SPECIAL 1/4"
50	G052857	2	NUT TOP LOCK FL M6-1.0
51	G025034	1	PLUG STEEL 1.0625
52	10000000649	3	SCREW BFHSC M6-1.0 X 16 CLEAR ZP
53	G026082	4	SCREW HHC 3/8-16 X 2-1/4 G5
54	0G0132	1	PUSH BUTTON WIRE TIE
55	0G1705	1	SCREW HHFC M6-1.0 X 14 G8.8
56	0C8566	11	SCREW HHFC M6-1.0 X 20 G8.8
57	G090388	29	SCREW HHTT M6-1.0 X 12 ZINC (9, 11KW)
	G090388	25	SCREW HHTT M6-1.0 X 12 ZINC (16-22KW, 15KW ECOGEN)
58	10000042784	4	SCREW SWT M6-1.0 X 16 ZK W/NO WASHER
59	0A5768	4	WASHER FLAT M10 HEAVY DUTY
60	0D7176	16	WASHER SELF LOCKING 1"DIA 12GA
61	0G7225	13	PANEL CLIP, M6-1.00 EXPANSION (9-22KW)
	0G7225	15	PANEL CLIP, M6-1.00 EXPANSION (15KW ECOGEN)
62	0G7225A	8	PANEL CLIP - 5/16-18 EXPANSION