GROUP EV

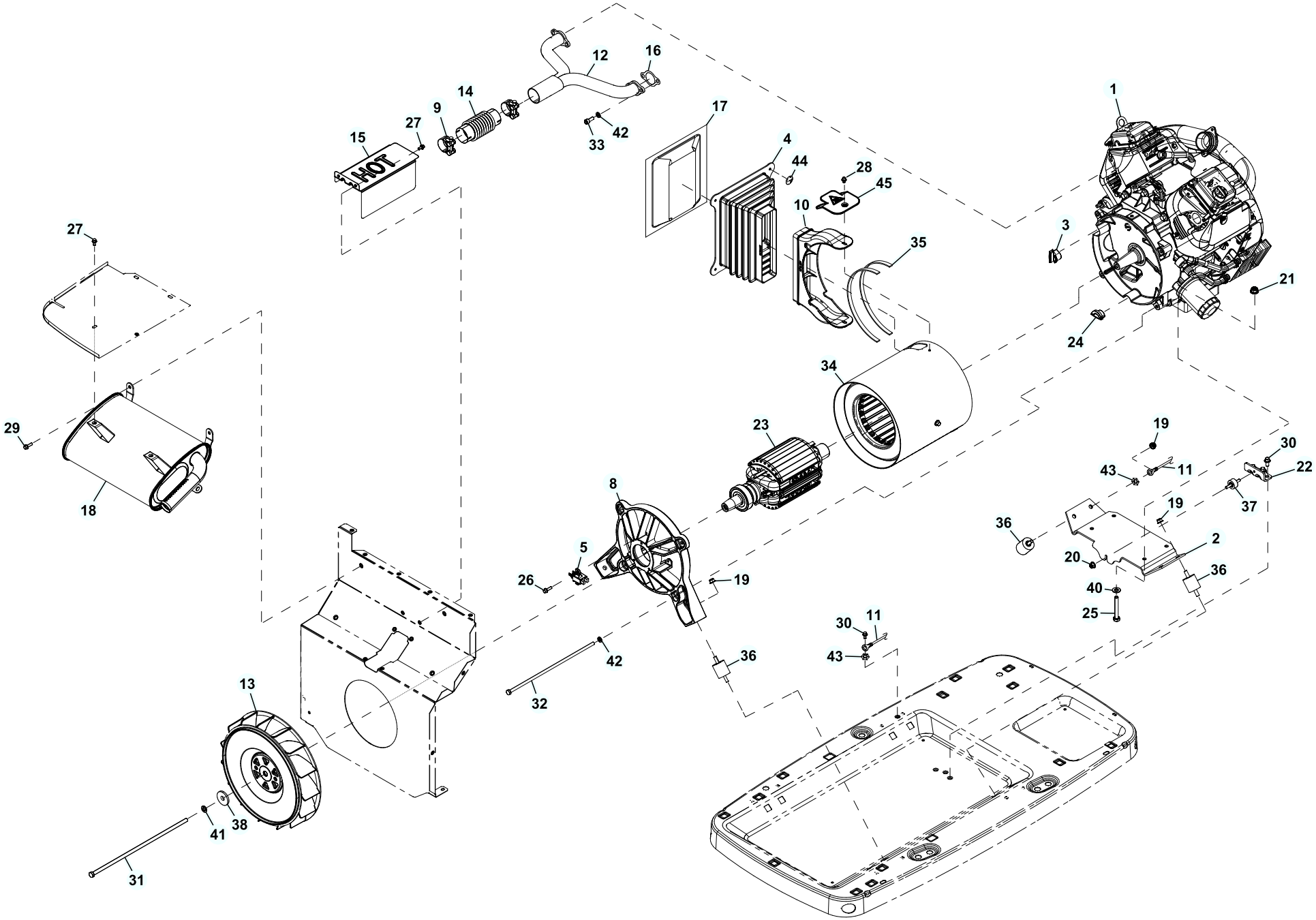

Revision : CN-0023637-C
Date : 2/1/19

Exploded View : EV 999 GENERATOR
Drawing No. : 10000017244

EXPLODED VIEW: EV 999 GENERATOR

DRAWING #: 10000017244

GROUP EV

ITEM	PART#	QTY.	DESCRIPTION
1	10000016573	1	ENGINE GTH999 (16KW)
	10000001706	1	ENGINE GTH999HD (20KW)
	10000017799	1	ENGINE GTH999SD (22KW)
2	0L42260ST03	1	999 ENG MOUNTING BRKT
3	0G2387	1	PLUG GEAR COVER ADAPTOR
4	0J6095	1	ALT AIR IN BELLOWS
5	0J8415	1	2 POSITION BRUSH HOLDER ASSEMBLY
6	0J9420B	1	CABLE BATT BLK #6 30.0” NEG (NOT SHOWN)
7	0L5407	1	CABLE BATT RED #6 38.5” POS (NOT SHOWN)
8	0J6938	1	CARRIER REAR BEARING MACHINED
9	0J7240	2	CLAMP BAND DIA 42.7-46.7MM
10	0G7256	1	DUCT – ALT AIR – 10” CAN – HSB
11	0C2417A	1	EARTH STRAP
12	0J7182	1	EXHAUST MANIFOLD
13	0J0833A	1	FAN EXHAUST
14	0J7211	1	FLEX PIPE
15	0G7586	1	FLEX PIPE COVER
16	0C4138	2	GASKET, EXHAUST PORT
17	0J7062	1	LOUVER SCREEN, ALT AIR IN
18	0J6220	1	MUFFLER
19	0H1218	6	NUT FLANGE 5/16-18 NYLOK
20	0D3700	1	NUT FLANGE M6-1.0 NYLOK
21	10000034692	4	NUT FLANGE M8-1.25 NYLOK
22	0J82300ST03	1	POWERHEAD BRACKET
23	0J9410	1	ROTOR (16,17KW)
	0J9411	1	ROTOR (20KW)
	10000001014	1	ROTOR (22KW)
24	0K4360	1	PLUG GEAR COVER ADAPTOR-SMALL
25	G051731	4	SCREW HHC M8-1.25 X 50 C8.8
26	G066849	2	SCREW HHTT M5 - 0.8 X 16
27	G090388	4	SCREW HHTT M6-1.0 X 12 ZINC
28	0C1069	2	SCREW HHTT M6-1.0 X 8 ZYC
29	0C5453	4	SCREW HHTT M8-1.2 X 12 BP
30	G083512	4	SCREW HHTT M8-1.2 X 16 YC
31	0D1838	1	SCREW IHHC 3/8-24 X 15.50 (16,17KW)
	0G7408	1	SCREW IHHC 3/8-24 X 17.50 (20,22KW)
32	0J7644	4	SCREW IHHC M8-1.25 X 335 G8.8 (16,17KW)
	0J7643	4	SCREW IHHC M8-1.25 X 390 G8.8 (20,22KW)
33	G040976	4	SCREW SCH M8-1.25 X 20 C12.9
34	10000000666	1	STATOR (16,17KW)
	10000000656	1	STATOR (20KW)
	10000001015	1	STATOR (22KW)
35	G029451	2.6FT	TAPE, FOAM 1/8” X 1/2"
36	0C7758	6	VIB MOUNT 1.5 X 1.38 X 5/16-18
37	0J8224	1	VIB MOUNT .50 X 1.0 X M6X1.00
38	G049451	1	WASHER FLAT .406ID X 1.62OD
39	077043M	3FT	CONDUIT FLEX .75” ID FR (NOT SHOWN)
40	G022145	3	WASHER FLAT 5/16/-M8 ZINC
41	G022237	1	WASHER LOCK 3/8
42	G022129	8	WASHER LOCK M8-5/16
43	0C3168	3	WASHER LOCK SPECIAL 5/16
44	0D7176	4	WASHER SELF LOCKING 1” DIA 12GA
45	10000041020	1	HEAT SHIELD ALT DUCT HSB